AU9336287

(12) PATENT ABRIDGMENT (11) Document No. AU-B-36287/93
(19) AUSTRALIAN PATENT OFFICE (10) Acceptance No. 670260

(54) Title
PLATFORM FOR RECOVERING SOLAR ENERGY

(51)[5] International Patent Classification(s)
H01L 031/052

(21) Application No. : **36287/93** (22) Application Date : **16.02.93**

(87) PCT Publication Number : **WO93/25856**

(30) Priority Data

(31) Number	(32) Date	(33) Country
898160	**15.06.92**	**US UNITED STATES OF AMERICA**

(43) Publication Date : **04.01.94**

(44) Publication Date of Accepted Application : **11.07.96**

(71) Applicant(s)
JOHANNES NIKOLAUS LAING

(72) Inventor(s)
JOHANNES NIKOLAUS LAING; INGE LAING

(74) Attorney or Agent
SPRUSON & FERGUSON , GPO Box 3898, SYDNEY NSW 2001

(56) Prior Art Documents
DE 4006516
DE 3934516
WO 91/17573

(57) Claim

1. A platform for solar power stations rotatable about a vertical axis, said platform comprising a liquid layer and a transparent roof which concentrates the radiation incident in an operating position in a plane at right angles to the sunrays onto photocells arranged in a trough below said roof which refracts the sun beams downwards, wherein said photocells have a heat-conducting connection to the trough, and wherein the trough is formed in such a way that the heat dissipation of the photocells is predominantly passed into the liquid layer through a region of the trough which lies below the surface of the liquid layer.

OPI DATE 04/01/94 APPLN. ID 36287/93
AOJP DATE 24/03/94 PCT NUMBER PCT/EP93/00368

AU9336287

(51) Internationale Patentklassifikation 5 :
F24J 2/52, 2/08, H01L 31/052

A1

(11) Internationale Veröffentlichungsnummer: WO 93/25856

(43) Internationales Veröffentlichungsdatum: 23. Dezember 1993 (23.12.93)

(21) Internationales Aktenzeichen: PCT/EP93/00368

(22) Internationales Anmeldedatum: 16. Februar 1993 (16.02.93)

(30) Prioritätsdaten:
07/898,160 15. Juni 1992 (15.06.92) US

(71)(72) Anmelder und Erfinder: LAING, Johannes, Nikolaus [DE/DE]; Hofenerweg 37, D-7148 Remseck-2 (DE).

(72) Erfinder; und
(75) Erfinder/Anmelder *(nur für US)* : LAING, Inge [US/US]; 1253 La Jolla Rancho Road, La Jolla, CA 92037 (US).

(74) Anwalt: BÜCHEL, Kurt, F.; Letzanaweg 25, FL-9495 Triesen (LI).

(81) Bestimmungsstaaten: AU, CA, JP, US, europäisches Patent (AT, BE, CH, DE, DK, ES, FR, GB, GR, IE, IT, LU, MC, NL, PT, SE).

Veröffentlicht
Mit internationalem Recherchenbericht.
Mit geänderten Ansprüchen.

670260

(54) Title: PLATFORM FOR RECOVERING SOLAR ENERGY

(54) Bezeichnung: PLATTFORM ZUR NUTZUNG DER SONNENENERGIE

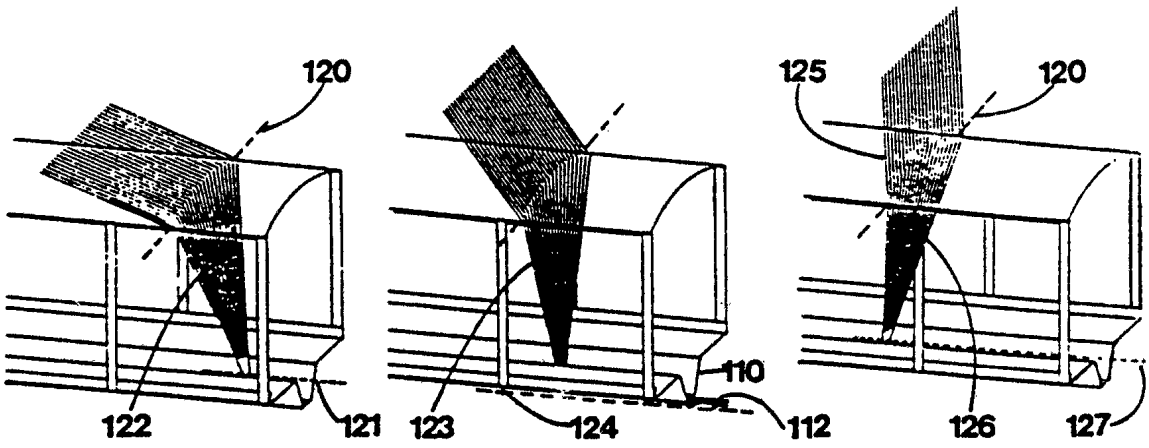

(57) Abstract

In a device designed as a rotatively mounted platform (a) for recovering solar electricity, the focussing roof layer (3) further deflects the incident radiation, so that the luminous beam (122, 123, 126) formed by the concentrating optics hits the radiation converter (112) arranged underneath approximately vertically.

(57) Zusammenfassung

Als drehbar gelagerte Plattform (a) ausgebildete Vorrichtung zur Gewinnung von Solarelektrizität, bei der die fokussierende Dachschicht (3) zusätzlich eine Ablenkung der Einstrahlung bewirkt, so dass die durch die konzentrierende Optik gebildeten Strahlenbüschel (122, 123, 126) annähernd senkrecht auf den unten angeordneten Strahlungswandler (112) auftreffen.

PLATFORM FOR RECOVERING SOLAR ENERGY

FIELD OF THE INVENTION

The invention describes a platform which is supported by a water layer, experiences a daily rotation about the vertical axis at the angular velocity of the sun and is rotated back during the night. To follow the solar altitude, the incident radiation is refracted towards the vertical to such an extent that all refracted sunrays strike the radiation converter.

PRIOR ART

Solar energy converters which are arranged on a body of water and track the azimuth are known. Their disadvantage is that the concentrators have to be oriented according to the particular solar altitude, which entails considerable mechanical effort. A second disadvantage is that the pivotable concentrators give rise to high drags so that wind forces cause the total installation to vibrate. In addition, all large components exposed to wind forces must be constructed using an appropriate quantity of material. A third disadvantage is that concentrators placed one behind the other viewed in the direction of the sun must be installed such a large distance apart that they do not cast shadows on one another.

AUSTRALIAN PATENT OFFICE 14 3

SUMMARY OF THE INVENTION

It is an object of the present invention to overcome or substantially ameliorate at least one of the above disadvantages.

There is disclosed herein a platform for solar power stations rotatable about a vertical axis, said platform comprising a liquid layer and a transparent roof which concentrates the radiation incident in an operating position in a plane at right angles to the sunrays onto photocells arranged in a trough below said roof which refracts the sun beams downwards, wherein said photocells have a heat-conducting connection to the trough, and wherein the trough is formed in such a way that the heat dissipation of the photocells is predominantly passed into the liquid layer through a region of the trough which lies below the surface of the liquid layer.

AUSTRALIAN PATENT OFFICE

BRIEF DESCRIPTION OF THE DRAWINGS

Preferred embodiments of the present invention will now be described, by way of example only, with reference to the accompanying drawings, wherein:

Figure 1 schematically shows a platform having an edge zone.

Figure 2 shows a cut-out II from Figure 1, in vertical section.

Figure 3 shows a perspective view of a lens arrangement.

Figure 4 shows the beam path in a refined version.

Figure 5a and 5b show a flat lens system with facets.

Figure 6 shows a flat lens with primary and secondary steps.

Figure 7 schematically shows the paths of curved steps.

Figure 8a shows the beam path in a secondary lens cut vertically and at right angles to the direction of the sun.

Figure 8b shows the beam path in the same secondary lens with lateral shifting of a light beam at right angles.

Figure 8c shows the beam path in the same secondary lens with lateral shifting of an oblique light beam.

Figure 9 shows an embodiment whose cross-section is composed of trapezoids lying one on top of the other.

Figure 10 shows a secondary lens which consists of a lens which converges in the outer regions and diverges in the inner region and is supported by mirrored walls.

AUSTRALIAN PATENT OFFICE

Figure 11 schematically shows a cross section through channels in which photocells float.

Figure 12 shows a secondary lens for compensation of lateral shifting of the light beam by displacement of a component.

Figure 13a, b, c shows a comparison of the deflections for different solar heights.

Detailed description

Figure 1 schematically shows the solar power station according to the invention, having a platform a, rotatable about the vertical axis d, and a frame b which floats in a channel c.

Figure 2 shows a horizontal section of the cut-out II in Figure 1. The energy conversion is effected on a circular platform a which is supported by a thin water layer 2. It is divided in parallel concentrator tunnels 5. A toroidal pipe 6 surrounding the platform forms a frame for a network which keeps the concentrator tunnels an exact distance apart and which transmits the rotary movement imposed on the toroidal pipe 6 to the platform. The network is formed from sheet metal sections 7 and steel cables 8 and is kept a constant distance from metal base sheets 1 by means of thin-walled flat tubes 9. A channel 10 in which the photocells 4 are located runs along the central line of each concentrator tunnel 5. The cover consists of concentrator discs 3 which not only concentrate the sun's rays in the manner of a cylindrical Fresnel lens onto focal lines but also refract the resulting light beams downwards. The photocells 4 are located between strand-like secondary lenses 12 and the bottom of the profile channel 10. The platform is centred by the toroidal pipe 6 which rolls along the annular wall 21 on castors 13, and is rotated about the vertical axis d at the angular velocity of the

AUSTRALIAN PATENT OFFICE 14 3

sun, so that during the day the photocells, controlled by known means, always follow the azimuth of the sun. During the night, the platform is rotated back to the starting position. The secondary lens 12 guides the light beam, independently of the level of the particular focal line, to the photocell 4 which covers the underneath of the secondary lens. A light beam 15 striking vertically is shown in the concentrator tunnel 5. The gap between the toroidal pipe 6 and the wall 16 is bridged by a contacting film 17. In addition, a film 18 is clamped between the toroidal pipe 6 and the adjacent energy tunnel so that evaporation of water is prevented. The heat dissipation of the photocells 4, unless already transferred during the hours of sunlight, is passed into the water layer 2 which is separated by a film 20 from the ground 19. The energy stored by the water is emitted 24 hours a day by convection and infrared radiation. The electricity generated by the platform is passed via flexible conductors into an earth cable leading to the centre. Rainwater passes through the flat tubes 9 into the water layer 2, from which excess water can flow away.

Figure 3 shows a perspective view of a lens arrangement which consists of an upper layer 30a having steps 30e and a layer 30b underneath having steps 32a and 32b, which enclose channels 31 between them. A Fresnel lens 33 whose steps 34 are at right angles to the steps 32 is located below this stepped lens 30a, 30b. The layers 30a and 30b have vertical channels 37 into which sheet metal strips 38 are inserted so that the layers cannot move towards one another. The flanks 39a and 39b are preferably mirrored. For regions with sand storms several layers 35 of an extremely thin film are fastened on the outside of the lens arrangement. If the surface of the uppermost layer 36 in each case is scratched,

AUSTRALIAN PATENT OFFICE

the said layer is removed. It has proved advantageous to bend the edge 30c downwards so that the line 30d is curved, resulting in curved roof elements according to Figure 2. This applies correspondingly for all flat lens variants.

Figure 4 shows a cross-section through a lens arrangement 30 with the rays of the sun at 20° and 80° elevation. While the rays 40a emerge as ray 40b after passing four times through boundary faces, said rays making an angle of 18° with the vertical 54, the ray 41a must be reflected at the flank 45b. For this reason, the flanks 45a and 45b are mirrored. After passing twice through boundary faces, the ray 42a passes as ray 42c through the channel 46 and emerges as ray 42b at the same angle to the vertical as the ray 40b but with opposite sign. After double refraction, the morning ray 41a with a very obtuse angle of incidence enters the channel 46 as ray 41c and is then reflected to become ray 41d. This ray 41d is parallel to the ray 42c, so that 41b, too, emerges at an angle of +18° to the vertical 54, as in the case of ray 42b. All sunrays striking between the limits of the morning incidence of 20° and the midday incidence of 80° lead to emerging beams which lie within the interval 40b - 41b of the angles of emergence. After triple refraction, the ray 43a strikes the flank 45b, undergoes total reflection there and becomes ray 43e. It then emerges as ray 43f and is reflected at the mirrored flank region 48a so that it emerges as ray 43b within the allowed angular interval. All 80° rays between the rays 44a$_1$ and 44a$_2$ would emerge outside the allowed angular interval if the flanks 45a and 45b were to merge with one another. To prevent loss of the rays, the channel 46 having the faces 46a and 46b through which rays pass is bordered by a channel 47 which has the faces 47a and 47b through which rays pass and whose

AUSTRALIAN PATENT OFFICE

walls through which rays pass guide the rays 44a$_1$ and 44a$_2$, optionally in combination with a reflection at the upper mirrored strip 48a of the flank 48a, 48b, in such a way that they emerge in the allowed interval. The rays between the rays 45a and 45a$_4$ undergo total reflection at the flank 48b and then emerge within the allowed angular interval. The ray 44a$_5$ emerges as ray 44b with a negative angle, and the subsequent rays up to 44a$_n$ undergo total reflection at the flank 45b and emerge with a positive angle in the allowed angular range, as does the ray 43b. All rays to the right thereof pass through the cylindrical lens with a positive angle, as in the case of the ray 42a.

Figure 5a schematically shows an embodiment of the lens arrangement according to Figures 3 and 4, in which the downward-pointing steps 32 are combined with the perpendicular steps 34 of the Fresnel lens underneath to give faceted lenses. The flat upper surface 50 pointing upwards forms the incident surface. In the planes at right angles to the incident sunlight 53, the rectangular regions 51 make the angles x_1, x_2, x_3, ... with the vertical 54, which angles become 90° in the region of the symmetry line 52. However, the rectangular regions 51 pointing towards the photocell are simultaneously inclined at the constant angle y to the vertical 54, in planes containing the sunrays 53. This gives rise to light beams which are simultaneously refracted towards the vertical 54. The planes of the flanks 55a, 55b, etc. intersect one another close to the focal line, in order to prevent shading of the emerging radiation of the relevant subsequent step. The flanks 56 at right angles to the symmetry line 52 are all in planes which make the constant angle w according to Figure 4 with the vertical 54.

AUSTRALIAN PATENT OFFICE

In Figure 5b, the rays 57a and 57b form the peripheral rays of the light beam produced at the elevation angle u of the sunrays 58. The peripheral rays 59a and 59b, which are assigned an elevation angle of 60°, are in a vertical plane.

Figure 6a shows another embodiment of a lens according to the invention which has steps 60 at right angles to the plane of incidence, so that sunrays 61 having a very obtuse angle of incidence are refracted towards the vertical 54. The rays having a very acute angle of incidence are refracted towards the sun side. The surfaces of the steps 60 are in turn provided with steps 63 of substantially finer division.

Figure 6b shows the steps in the framed region VI on a larger scale. The steps 64, 65, 66 have prism angles which point towards the symmetry line 67 and become zero at the height of the symmetry line. These steps effect the concentration.

Figure 7 shows a flat lens viewed from below. Steps 71 whose prism angles assume zero value at the height of the vertex line 70 and increase on both sides with increasing distance from the vertex line 70 run symmetrically to the vertex line 70 along virtually parabolic lines. Each viewing element of the steps 71 which is a distance away from the vertex line 70 has a wedge angle which, in conjunction with the angle which the tangent to the viewing element makes with the vertex line 70, refracts a sunray passing through from the (invisible) upper side optically skew to a focal line.

Figure 8a shows the cross-section of a cylindrical lens 80 which is in optical contact with the photocell 81. This contact is achieved by introducing a wetting immersion liquid or an optical cement 82 having a tailored refractive index. The geometry meets the requirement that the solar cell 81

AUSTRALIAN PATENT OFFICE

should be illuminated with virtually identical luminous intensity for all existing light beams having the peripheral rays 87a and 87b. This is achieved by a cylindrical lens whose cross-sectional shape is trapezoidal in the lower part and corresponds to an aspherical plano-convex cylindrical lens in the upper part. In a preferred embodiment, the incident surface 83 has an elliptical sectional curve. The lateral surfaces 84 are likewise in the form of optical functional surfaces, so that total reflection takes place where required. The focal lines 85a, which would be located below the photocell 81, are produced above the photocells 81 owing to the shape of the incident surface, so that the focal line does not migrate through the cell at any solar elevation. The migration of the focal line would assume the magnitude 85b without a secondary lens. By means of the secondary lens, the focal line is positioned in such a way that, when the photocell 81 is suitably coordinated with the incident surface 83, an essentially uniform distribution of the luminous intensity over the cell width is achieved, corresponding to blurred focusing of the focal lines onto the photocells.

Where there is a lateral shift between the subsequent lens and the secondary lens owing to interfering forces when the power station is being operated, the incident surface 83 effects an optical compensation of the shifting of the focal line. While in the case of perpendicular light beams having the peripheral rays 87a the outer rays are caused to converge, the rays of an oblique light beam having the peripheral rays 87b experience divergent refraction.

Figure 8b shows the refracted rays 88a of the vertically incident light beam having the peripheral rays 87a, the secondary lens 80 being shifted

AUSTRALIAN PATENT OFFICE

laterally relative to the light beam by a magnitude 89.

Figure 8c shows the beam path for the oblique position of the light beams 122 and 12c having the peripheral rays 87c in the case of a lateral shifting by the magnitude 89, said oblique position being shown in Figures 13a and 13c.

Figure 9 shows a further embodiment of a secondary lens which is associated with the photocell 94 and whose effect corresponds to that of the secondary lens of Figure 8. Considerable material is saved according to the smaller cross sectional area, and less attenuation is achieved as a result of the shorter light paths for the peripheral rays. The embodiment of the incident surface 83, described in Figure 8, is divided into the areas 90, 91, 92 and 93. Here too, all lateral surfaces are designed so that total reflection of the rays which may be incident from inside is ensured.

Figure 10 shows a secondary lens whose outer regions 103a and 103b effect convergent refraction of the outer regions of a light beam which is in a vertical plane, whereas they effect divergent refraction, through the middle region 104, of these rays of a light beam in an oblique plane. The lateral walls 101 are mirrored, with the result that even horizontally shifted rays are reflected to the photocell 102. If the lens region is produced from organic glass, the space 105 underneath, including walls 101, can be produced integrally with the lens region.

Figure 11 shows a cross-section of a concentrator tunnel 115 having a channel 110 in which a pontoon 111 floats on a body 116 of water and holds the photocell 112. The height of the body 116 of water in the channel determines the distance of the photocell 112 from the flat lens 114.

AUSTRALIAN PATENT OFFICE

Figure 12 shows a secondary lens 116 which is arranged so that it can be displaced laterally relative to the photocell 112a by the magnitude 117a and which effects the shift by a maximum magnitude 117a by means of an apparatus which is not shown, as a function of the lateral shift of the light beam relative to the photocell 112a. As a result, the light beam having the peripheral rays 118a is guided towards the photocell 112a even when those peripheral rays have shifted up to the distance 117' from the symmetry line 117 into the position 118b.

Figure 13a shows a light beam which is produced by the flat lenses described at the outset. The greatest refraction about axes 120 at right angles to the focal line 121 takes place in the early morning and late afternoon. The refracted light beam 122 makes an angle of about 18 with the vertical. In this oblique position of the light beam, the focal line 121 has the greatest height.

Figure 13b shows that the light beam 123 is perpendicular twice a day, in each case when the solar elevation is about 60°. The theoretical focal line 124 is then below the photocell 112 which collects the total concentrated radiation. It is even below the channel 110 and thus reaches the lowest level.

As shown in Figure 13c, the noon sunrays 125 are refracted about the axis 120 at right angles to the focal line towards the sun, so that the light beams 126 lie in planes which make an angle of +18° with the vertical. The focal line 127 once again reaches the same height as the focal line 121 does in the early morning and late afternoon.

AUSTRALIAN PATENT OFFICE

The claims defining the invention are as follows:

1. A platform for solar power stations rotatable about a vertical axis, said platform comprising a liquid layer and a transparent roof which concentrates the radiation incident in an operating position in a plane at right angles to the sunrays onto photocells arranged in a trough below said roof which refracts the sun beams downwards, wherein said photocells have a heat-conducting connection to the trough, and wherein the trough is formed in such a way that the heat dissipation of the photocells is predominantly passed into the liquid layer through a region of the trough which lies below the surface of the liquid layer.

2. The platform according to Claim 1, wherein an outward-facing layer of the transparent roof forms a first horizontal flat lens having a first outward-facing smooth boundary face which has, on a downward-facing side, a group of second boundary faces which are divided into steps and, in the operating position, run transversely to the sunrays, said steps making an angle with the first boundary face such that a sunray having a zenith angle of more than 60° is refracted to give an emerging ray which makes an angle of less than 30° with the vertical in a direction away from the sun, while a sunray having a zenith angle of less than 20° is refracted to give an emerging ray which points towards the sun and makes an angle of less than 30° with the vertical, and wherein the rays emerging from the transparent roof are concentrated to a focal line parallel to the sunrays.

3. The platform according to claim 2, further comprising a second flat lens having upward and downward facing steps and a third flat lens having steps perpendicular to the steps of said first flat lens, wherein the steps of said first flat lens coordinate with said second and third flat lenses such that a sunray having a zenith angle of more than 60° is refracted to give an emerging ray which makes an angle of less than 30° with the vertical in a direction away from the sun while a sunray having a zenith angle of less than 20° is refracted to give an emerging ray which points towards the sun and makes an angle of less than 30° with the vertical, and wherein the rays emerging from the transparent roof are concentrated to a focal line parallel to the sunrays.

4. The platform according to Claim 2 or 3, wherein the rays bounding an interval of zenith angles are refracted to give their associated emerging rays, each of which make with the vertical an angle of virtually the same magnitude but opposite sign.

AUSTRALIAN PATENT OFFICE 13

5. The platform according to Claim 3 or 4, wherein the downward-facing steps of the first flat lens, together with the upward-facing steps of said second flat lens having the same step division of said second flat lens located underneath, enclose prismatic channels.

6. The platform according to Claim 5, wherein said first and second lenses comprise grooves which run at right angles to said channels, and thin-walled, tape-like strips which project into said grooves, said strips adapted to fix said first and second flat lenses to one another in the direction of said channels.

7. The platform according to any one of Claims 3-6, wherein boundary faces of the steps of said first and second flat lenses lying one on top of the other, through which boundary face rays pass, comprise parallel strip-like regions which are present side by side and make an obtuse angle with one another.

8. The platform according to any one of Claims 3-7, wherein flanks of the downward-facing steps of the second flat lens comprise strip-like regions which lie one on top of the other and make obtuse angles with one another.

9. The platform according to any one of Claims 5-8, wherein boundary faces of each step of said first flat lens, through which boundary face rays pass, and boundary faces of each upward-facing step of the second flat lens underneath, through which boundary faces rays pass, enclose two triangular channels, the larger of which tapers towards the sun in the operating position and the smaller of which widens towards the sun in the operating position.

10. The platform according to any one of Claims 3-5, wherein the downward-facing side of the transparent roof comprises facets having edges parallel and at right angles to the perpendicular plane of incidence, those surfaces of the facets through which rays pass being inclined relative to the horizontal so that a vertical section through the facets, at right angles to the vertical plane of incidence, is equivalent to a section through a Fresnel lens, and that a section through the facets parallel to the plane of incidence exhibits a periodic step.

11. The platform according to any one of Claims 2, 3 or 4, wherein flank-forming surfaces of the roof-forming flat lenses through which rays entering the interval of angles of emergence do not pass in the operating position are mirrored, and wherein these mirrored surfaces make an angle with the vertical such that rays incident on these flanks are reflected in a direction such that they emerge within the interval of angles of emergence which is formed by only refracted sunrays.

AUSTRALIAN PATENT OFFICE

12. The platform according to any one of Claims 2-11, wherein a first group of downward-facing steps of a roof-forming flat lens has a coarse division, and wherein boundary faces of said first group of downward facing steps, through which boundary face rays pass, carry secondary steps which are at right angles to said first group of downward facing steps and have a finer division with the varying angles of a Fresnel lens.

13. The platform according to any one of the preceding claims, wherein the transparent roof further comprises a flat lens having prism-forming steps which run along curved paths symmetrically to a vertex line parallel to the plane of incidence, the prism angles increasing over the length of the steps with increasing distance from said vertex line, and wherein the prism angles associated with each distance from the vertex line and the angles between the respective tangents to the prism-forming step and the vertex line are chosen so that all incident sunrays are refracted towards a focal line.

14. The platform according to any one of the preceding claims, further comprising a secondary lens whose optical geometry guides light beams, which, as a function of the respective zenith angle, generate focal lines having different distances from the transparent roof, within the limits of a predetermined interval of zenith angles, onto the photocells, said secondary lens being arranged between the transparent roof and the photocells.

15. The platform according to Claim 14, wherein the photocells are connected to the secondary lens without any optical distance in between.

16. The platform according to Claim 14 or 15, wherein the geometry of the secondary lens guides the sunrays refracted to give light beams, provided that said sunrays are laterally displaced relative to the photocells when they are incident on the secondary lens, such that these light beams are all incident on the photocells within a predetermined interval of the lateral shift.

17. The platform according to any one of Claims 14-16, wherein the shape of the entry surface of the secondary lens is such that the focal lines are within the secondary lens so that they do not move through the photocells at any zenith angle.

18. The platform according to any one of Claims 14-17, wherein the cross-section of the secondary lens forms a trapezium whose lower side faces the photocells and which has symmetrically divergent sides and an upper side which is formed from three parts and consists of parts, which resemble sections of a longitudinally cut upper half of an elipse having a horizontal long axis, and a middle part which effects divergent refraction of obliquely incident rays.

AUSTRALIAN PATENT OFFICE

19. The platform according to Claim 14, wherein a lower side of the secondary lens faces the photocells and wherein the cross-section of the secondary lens comprises wall regions which are symmetrical to the vertical and are formed from sides of trapezoids which are present one on top of the other, and wherein an upper side of said secondary lens resembles an arc of a circle.

20. The platform according to Claim 14, further comprising a cylindrical lens whose outer regions effect convergent refraction, said cylindrical lens being maintained a predetermined distance above the photocells by mirrored wall regions.

21. The platform according to any one of the preceding claims, wherein the photocells float, on a body of liquid, by means of whose level the distance of the photocells from the transparent roof can be adjusted.

22. The platform according to any one of the preceding claims, wherein an element of a module comprising a photocell having a central line and a secondary lens or a part of such a secondary lens, is arranged displaceably relative to another such element, the distance between the central line and the symmetry line of the secondary lens being variable, said platform further comprising means adapted to effect a relative displacement which brings the photocell and the zone of highest luminous intensity into coincidence again as a function of the shifting of the zone of highest luminous intensity from the photocell.

23. The platform according to any one of the preceding claims, further comprising several layers of an extremely thin removable film arranged on the transparent roof.

24. A platform for solar power stations substantially as hereinbefore described with reference to the accompanying drawings.

DATED this Twenty-second Day of April 1996

Johannes Nikolaus Laing

Patent Attorneys for the Applicant

SPRUSON & FERGUSON

AUSTRALIAN PATENT OFFICE

36287 | 93

FIG. 1

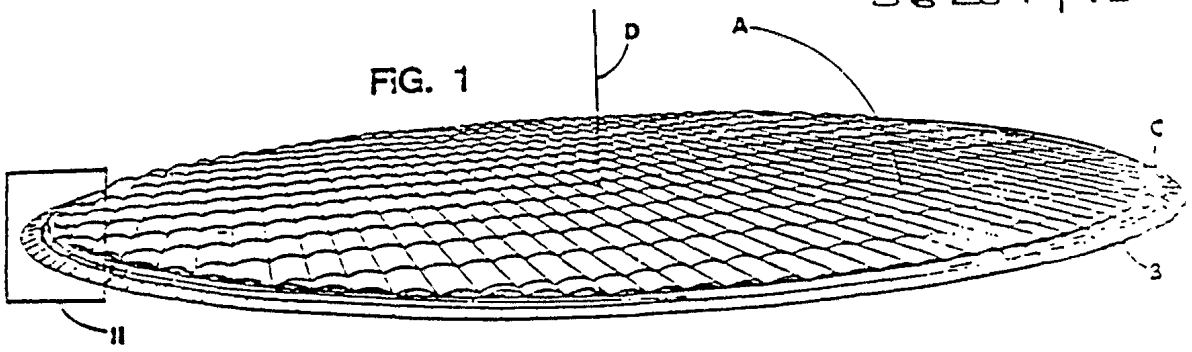

FIG. 2

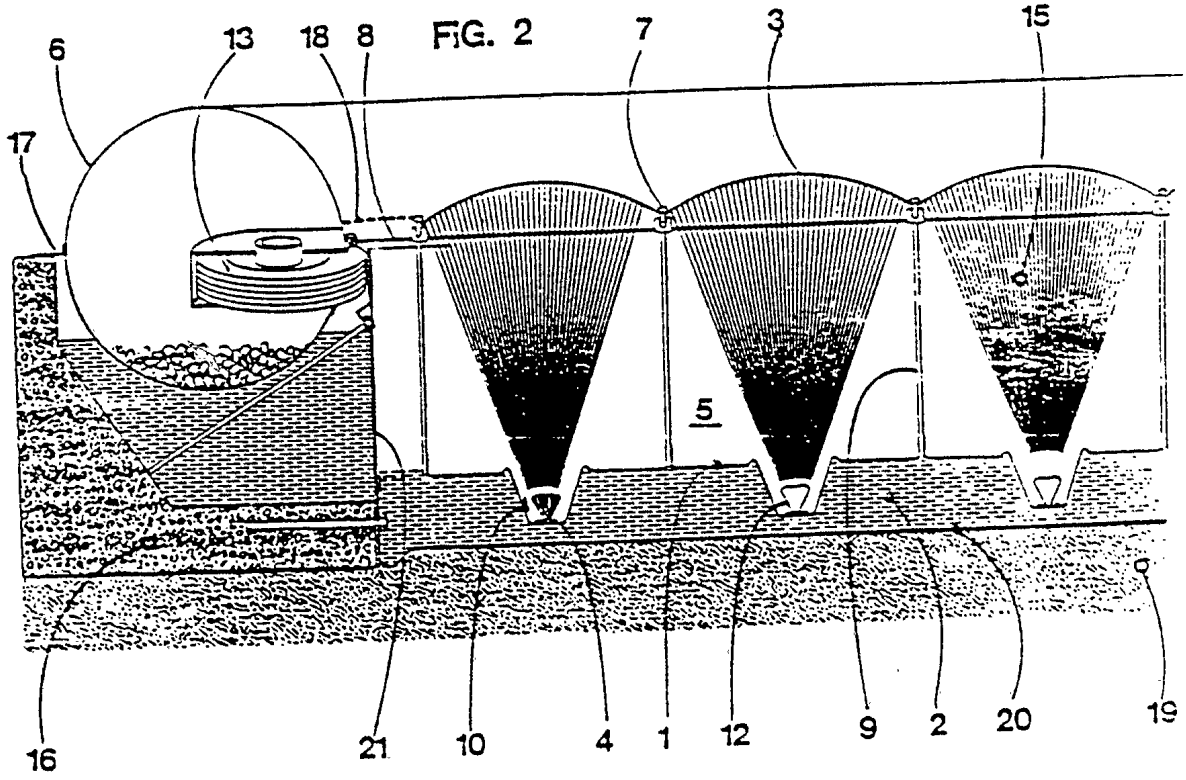

FIG. 13a

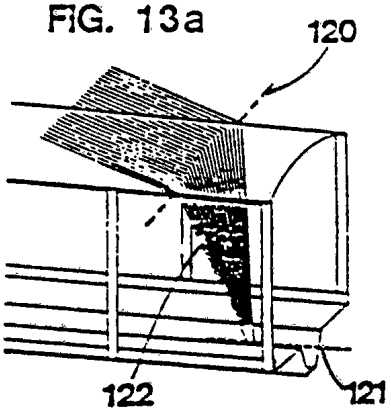

FIG. 13b

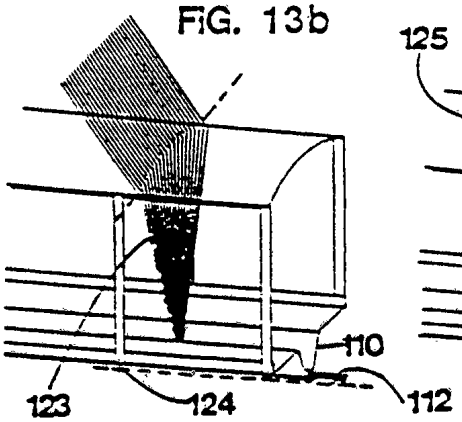

FIG. 13c

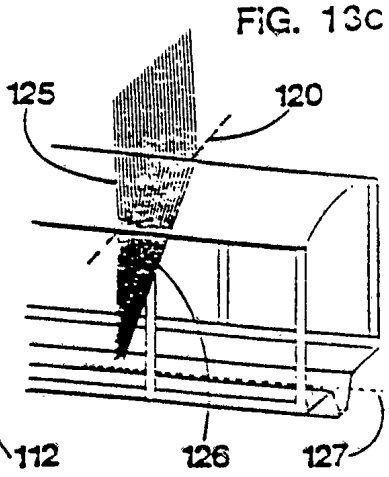

FIG. 4

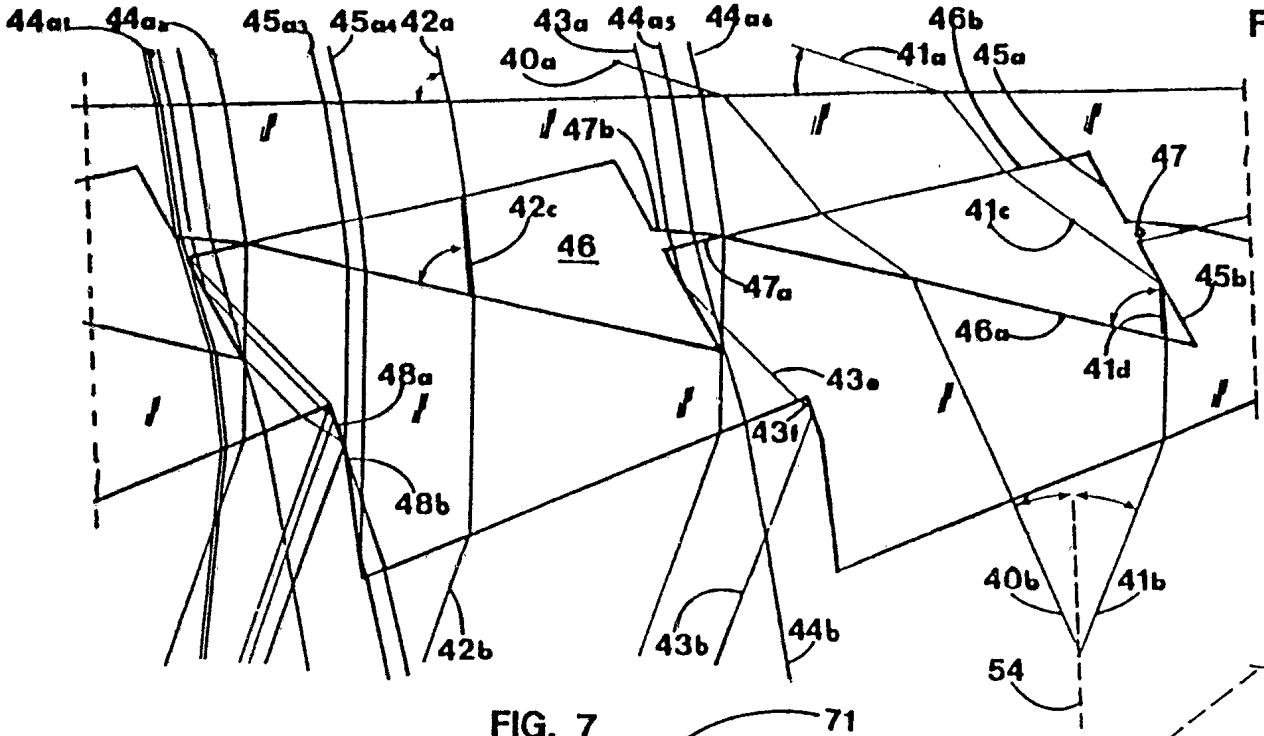

FIG. 7

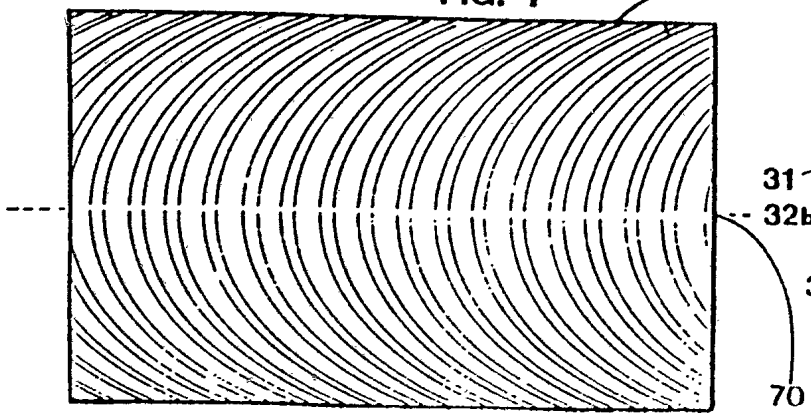

FIG. 3

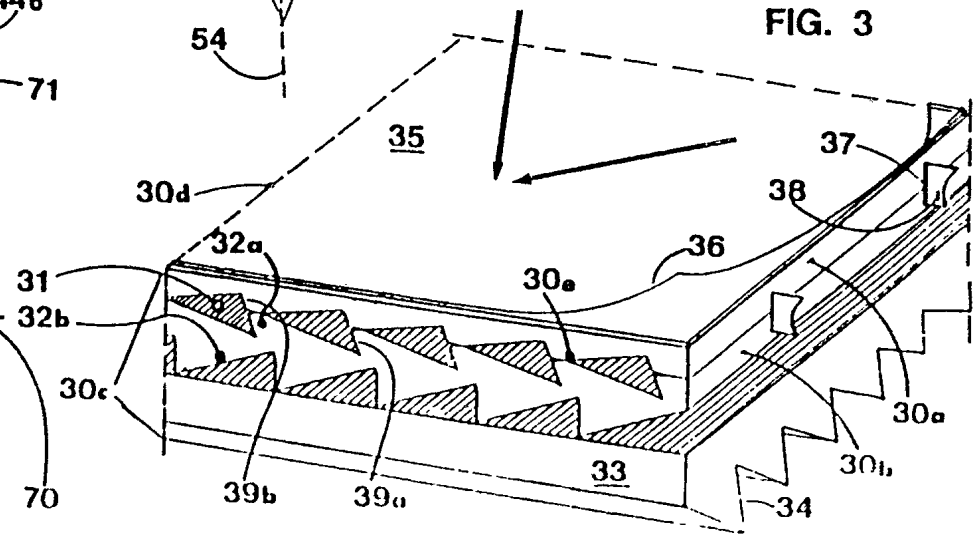

FIG. 5a

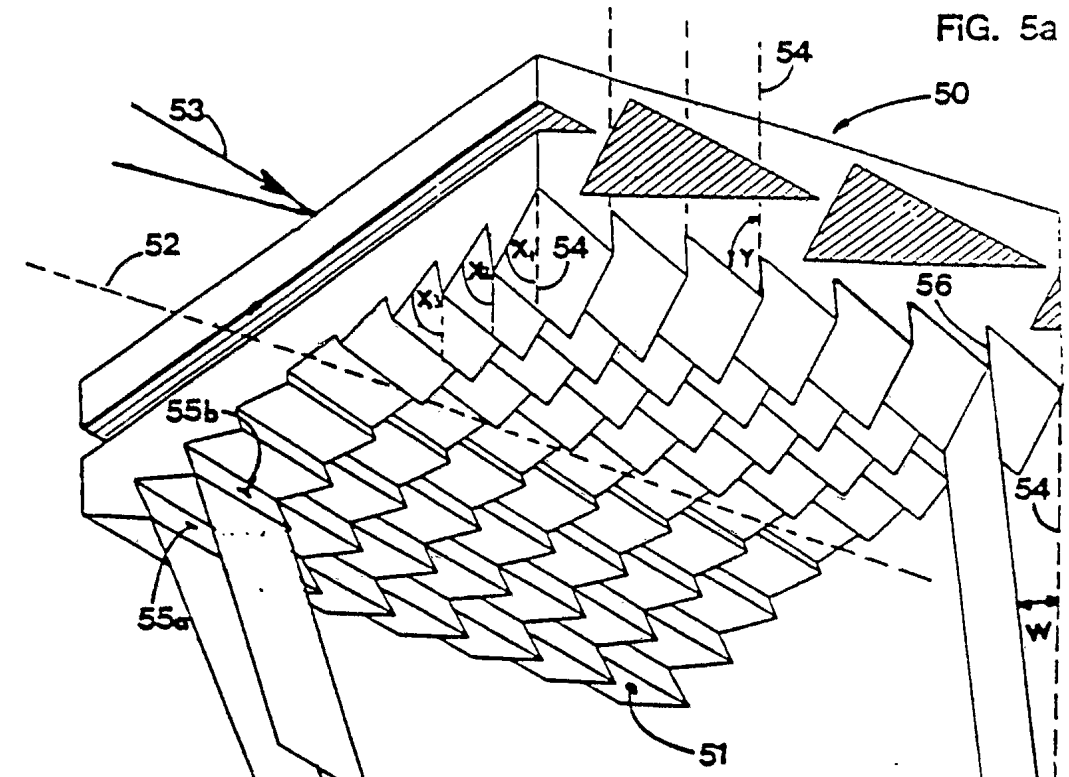

FIG. 5b

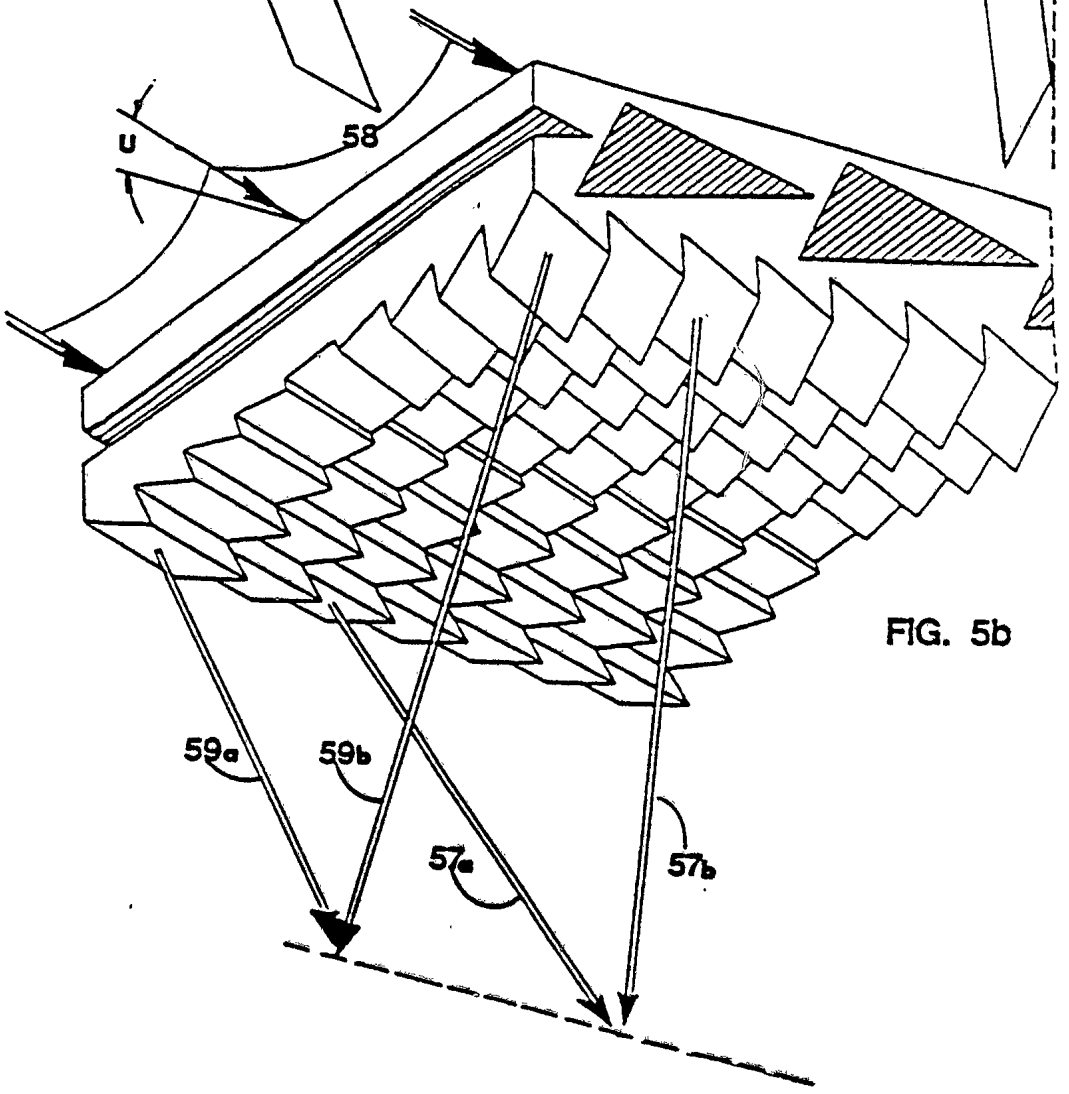

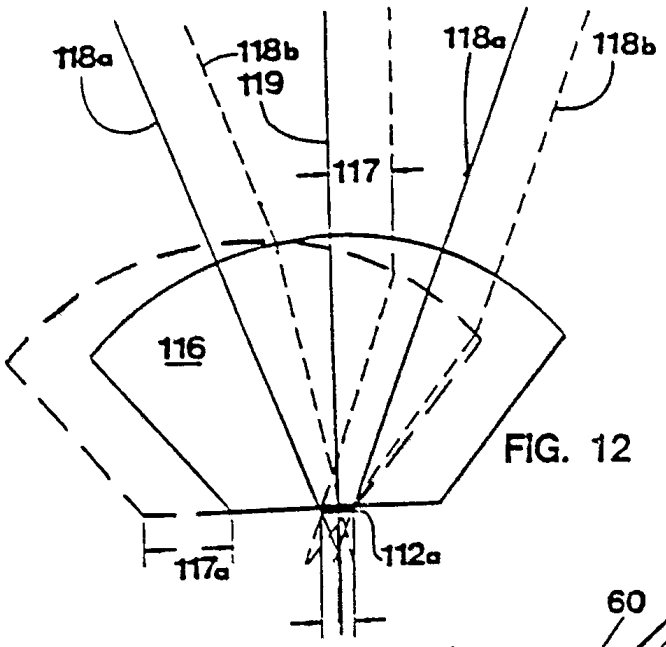

FIG. 12

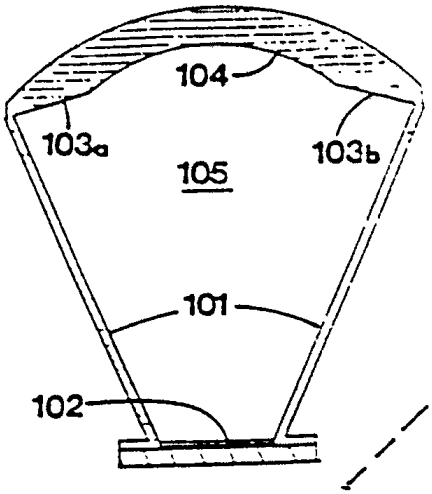

FIG. 10

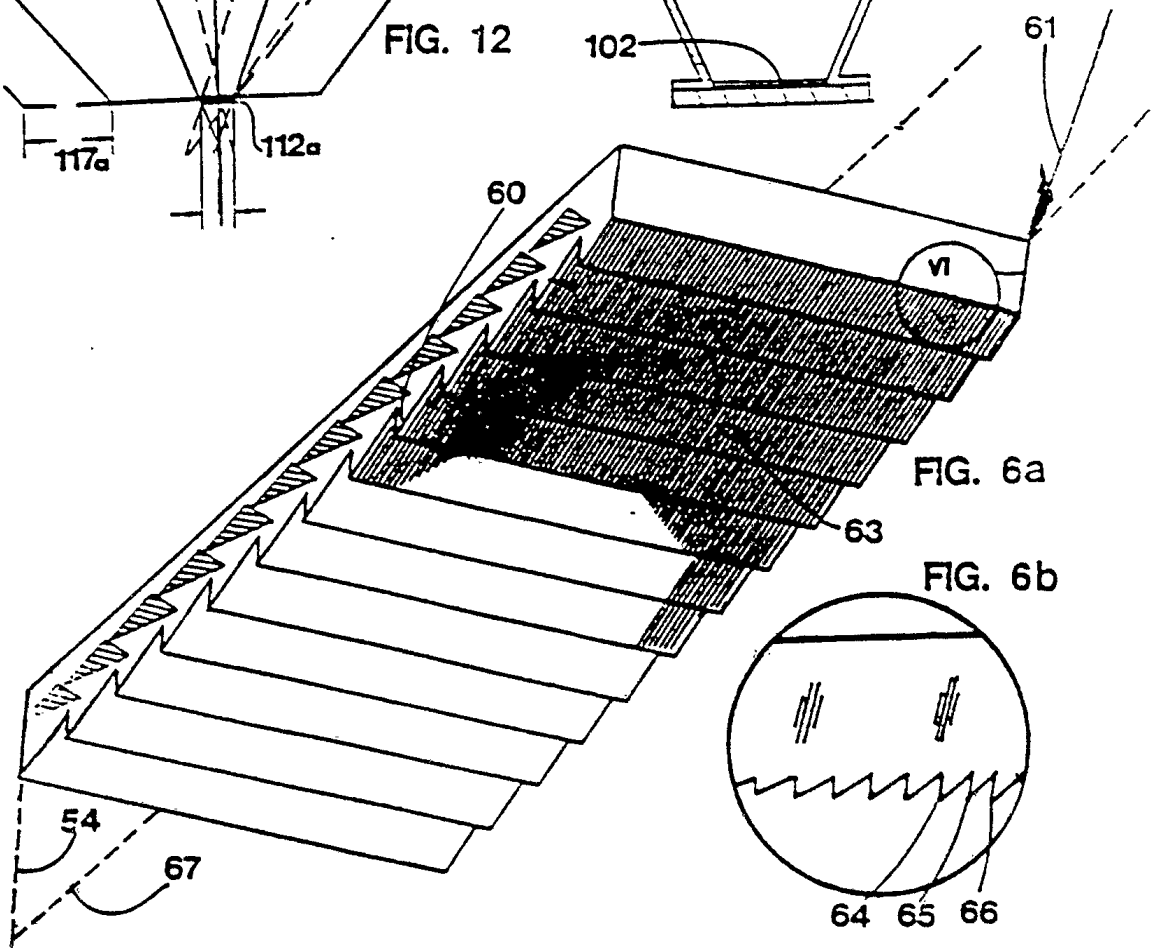

FIG. 6a

FIG. 6b

FIG. 11

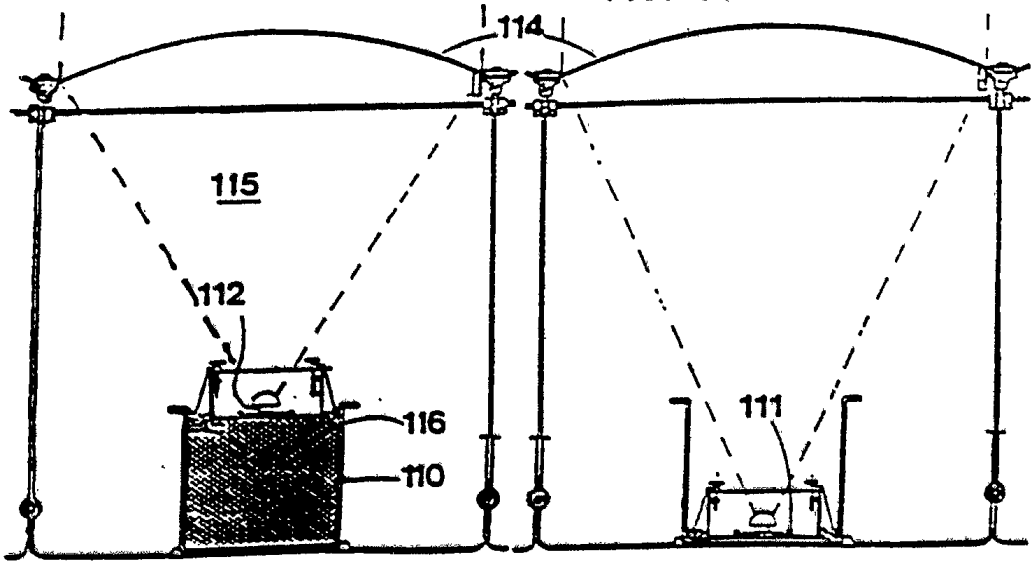

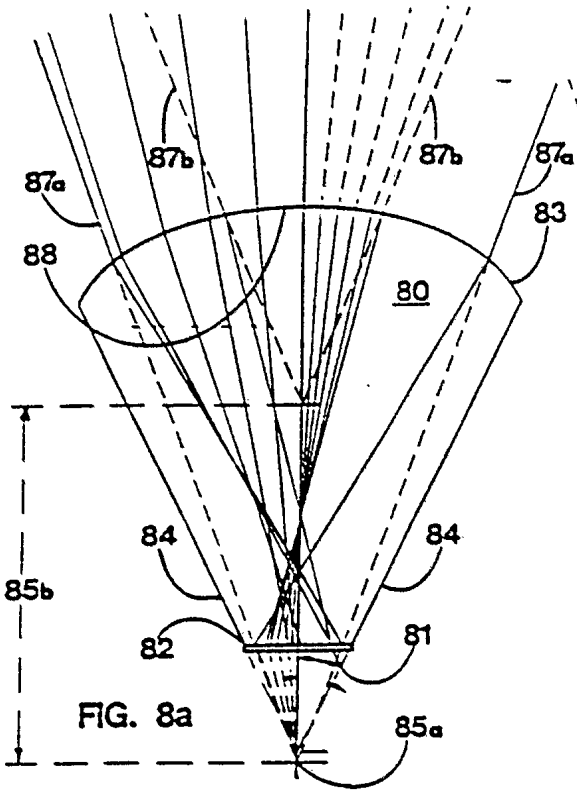

FIG. 8a

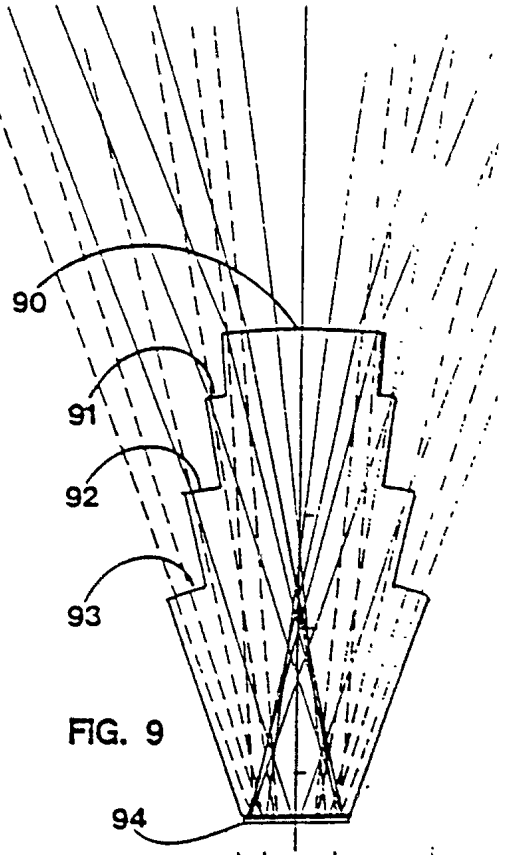

FIG. 9

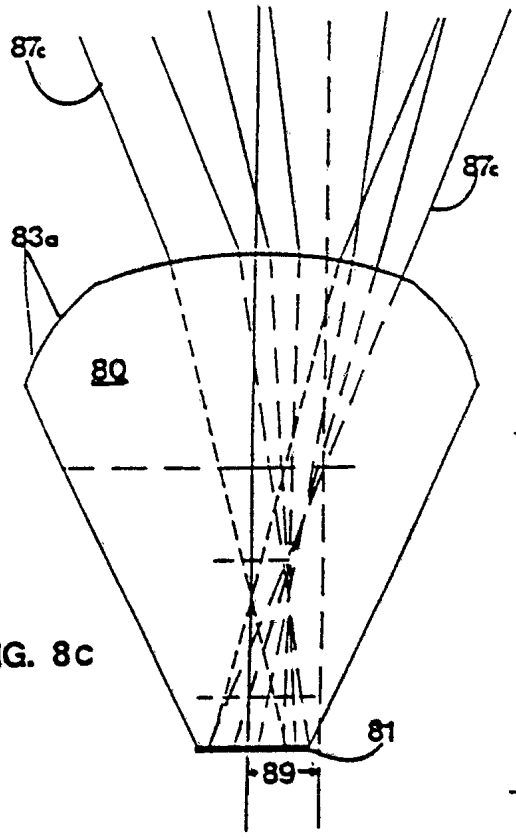

FIG. 8c

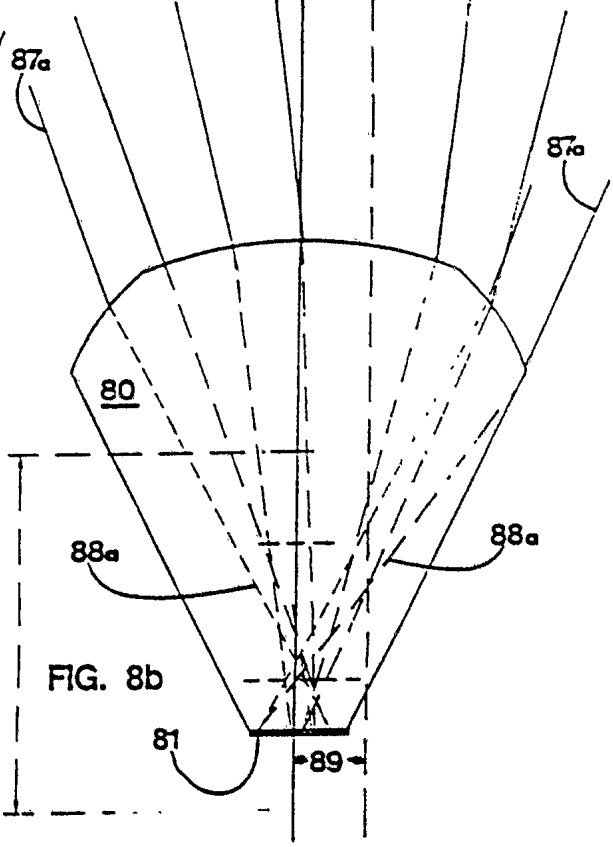

FIG. 8b

INTERNATIONAL SEARCH REPORT

International application No
PCT/EP 93/00368

A. CLASSIFICATION OF SUBJECT MATTER

Int. Cl.[5] F24J2/52; F24J2/08; H01L31/052

According to International Patent Classification (IPC) or to both national classification and IPC

B. FIELDS SEARCHED

Minimum documentation searched (classification system followed by classification symbols)

Int. Cl.[5] F24J

Documentation searched other than minimum documentation to the extent that such documents are included in the fields searched

Electronic data base consulted during the international search (name of data base and, where practicable, search terms used)

C. DOCUMENTS CONSIDERED TO BE RELEVANT

Category*	Citation of document, with indication, where appropriate, of the relevant passages	Relevant to claim No.
X	WO, A, 9 117 573 (LAING ET AL) 14 November 1991 see page 16, line 22 - page 17, line 9 see page 19, line 28 - page 25, line 12; figures 1,8A,12-18	1,4-6
A	---	2,3,7-25
A	DE, A, 4 006 516 (LAING) 5 September 1991 see column 2, line 8 - column 3, line 55; figures 1-9	1-25

A	DE, A, 3 934 516 (LAING), 18 April 1991 see column 1, line 32 - column 2, line 60; figures 1-6	1-25

	-/--	

☐ Further documents are listed in the continuation of Box C. ☐ See patent family annex.

* Special categories of cited documents:

"A" document defining the general state of the art which is not considered to be of particular relevance

"E" earlier document but published on or after the international filing date

"L" document which may throw doubts on priority claim(s) or which is cited to establish the publication date of another citation or other special reason (as specified)

"O" document referring to an oral disclosure, use, exhibition or other means

"P" document published prior to the international filing date but later than the priority date claimed

"T" later document published after the international filing date or priority date and not in conflict with the application but cited to understand the principle or theory underlying the invention

"X" document of particular relevance; the claimed invention cannot be considered novel or cannot be considered to involve an inventive step when the document is taken alone

"Y" document of particular relevance; the claimed invention cannot be considered to involve an inventive step when the document is combined with one or more other such documents, such combination being obvious to a person skilled in the art

"&" document member of the same patent family

Date of the actual completion of the international search	Date of mailing of the international search report
18 June 1993 (18.06.93)	6 July 1993 (06.07.93)
Name and mailing address of the ISA/ European Patent Office **Facsimile No.**	**Authorized officer** **Telephone No.**

C (Continuation). DOCUMENTS CONSIDERED TO BE RELEVANT

Category*	Citation of document, with indication, where appropriate, of the relevant passages	Relevant to claim No.
A	US, A, 3 915 148 (FLETCHER ET AL) 28 October 1975 see column 2, line 27 - column 5, line 50; figures 1-4	1-25
A	US, A, 4 329 021 (BENETT ET AL) 11 May 1982 see column 2, line 60 - column 6, line 16; figures 1-4	1-25
A	WO, A, 9 004 142 (SOLAR ENERGY APPLICATIONS INC.) 19 April 1990 see page 10, line 1 - page 11, line 21; figures 1-7,26,27	1-25
A	EP, A, 0 051 932 (MINNESOTA MINING AND MANUFACTURING CO.) 19 May 1982 see page 16, line 6 - page 16, line 26; figure 10	1-25
A	PATENT ABSTRACTS OF JAPAN Vol. 7, No. 132 (E-180)(1277) 9 June 1983 & JP, A, 58 048 477 (NIPPON DENKI KK) 22 March 1983 see abstract	1-25

ANNEX TO THE INTERNATIONAL SEARCH REPORT ON INTERNATIONAL PATENT APPLICATION NO.

EP 9300368
SA 71286

This annex lists the patent family members relating to the patent documents cited in the above-mentioned international search report.
The members are as contained in the European Patent Office EDP file on
The European Patent Office is in no way liable for these particulars which are merely given for the purpose of information. 18/06/93

Patent document cited in search report	Publication date	Patent family member(s)		Publication date
WO-A-9117573	14-11-91	DE-A-	4013843	31-10-91
		AU-A-	7777691	27-11-91
		EP-A-	0495933	29-07-92
		JP-T-	4507135	10-12-92
DE-A-4006516	05-09-91	None		
DE-A-3934516	18-04-91	None		
US-A-3915148	28-10-75	AU-B-	498583	15-03-79
		AU-A-	8681875	26-05-77
		CA-A-	1030832	09-05-78
		DE-A-	2552092	26-05-76
		FR-A,B	2292201	18-06-76
		GB-A-	1524694	13-09-78
		JP-A-	51073645	25-06-76
US-A-4329021	11-05-82	None		
WO-A-9004142	19-04-90	AU-A-	4348389	01-05-90
EP-A-0051932	19-05-82	US-A-	4385808	31-05-83
		AU-B-	548406	12-12-85
		AU-A-	7706481	13-05-82
		CA-A-	1160088	10-01-84
		JP-A-	57105703	01-07-82
		SU-A-	1271380	15-11-86

INTERNATIONALER RECHERCHENBERICHT

Internationales Aktenzeichen PCT/EP 93/00168

I. KLASSIFIKATION DES ANMELDUNGSGEGENSTANDS (bei mehreren Klassifikationssymbolen sind alle anzugeben)[6]

Nach der Internationalen Patentklassifikation (IPC) oder nach der nationalen Klassifikation und der IPC

Int.Kl. 5 F24J2/52; F24J2/08; H01L31/052

II. RECHERCHIERTE SACHGEBIETE

Recherchierter Mindestprüfstoff [7]

Klassifikationssytem	Klassifikationssymbole
Int.Kl. 5	F24J

Recherchierte nicht zum Mindestprüfstoff gehörende Veröffentlichungen, soweit diese unter die recherchierten Sachgebiete fallen [8]

III. EINSCHLAGIGE VERÖFFENTLICHUNGEN [9]

Art.°	Kennzeichnung der Veröffentlichung [11], soweit erforderlich unter Angabe der maßgeblichen Teile [12]	Betr. Anspruch Nr.[13]
X	WO,A,9 117 573 (LAING ET AL) 14. November 1991 siehe Seite 16, Zeile 22 - Seite 17, Zeile 9 siehe Seite 19, Zeile 28 - Seite 25, Zeile 12; Abbildungen 1,8A,12-18	1,4-6
A	---	2,3,7-25
A	DE,A,4 006 516 (LAING) 5. September 1991 siehe Spalte 2, Zeile 8 - Spalte 3, Zeile 55; Abbildungen 1-9	1-25

A	DE,A,3 934 516 (LAING) 18. April 1991 siehe Spalte 1, Zeile 32 - Spalte 2, Zeile 60; Abbildungen 1-6	1-25

	-/--	

° Besondere Kategorien von angegebenen Veröffentlichungen [10]:

"A" Veröffentlichung, die den allgemeinen Stand der Technik definiert, aber nicht als besonders bedeutsam anzusehen ist

"E" älteres Dokument, das jedoch erst am oder nach dem internationalen Anmeldedatum veröffentlicht worden ist

"L" Veröffentlichung, die geeignet ist, einen Prioritätsanspruch zweifelhaft erscheinen zu lassen, oder durch die das Veröffentlichungsdatum einer anderen im Recherchenbericht genannten Veröffentlichung belegt werden soll oder die aus einem anderen besonderen Grund angegeben ist (wie ausgeführt)

"O" Veröffentlichung, die sich auf eine mündliche Offenbarung, eine Benutzung, eine Ausstellung oder andere Maßnahmen bezieht

"P" Veröffentlichung, die vor dem internationalen Anmeldedatum, aber nach dem beanspruchten Prioritätsdatum veröffentlicht worden ist

"T" Spätere Veröffentlichung, die nach dem internationalen Anmeldedatum oder dem Prioritätsdatum veröffentlicht worden ist und mit der Anmeldung nicht kollidiert, sondern nur zum Verständnis des der Erfindung zugrundeliegenden Prinzips oder der ihr zugrundeliegenden Theorie angegeben ist

"X" Veröffentlichung von besonderer Bedeutung; die beanspruchte Erfindung kann nicht als neu oder auf erfinderischer Tätigkeit beruhend betrachtet werden

"Y" Veröffentlichung von besonderer Bedeutung; die beanspruchte Erfindung kann nicht als auf erfinderischer Tätigkeit beruhend betrachtet werden, wenn die Veröffentlichung mit einer oder mehreren anderen Veröffentlichungen dieser Kategorie in Verbindung gebracht wird und diese Verbindung für einen Fachmann naheliegend ist

"&" Veröffentlichung, die Mitglied derselben Patentfamilie ist

IV. BESCHEINIGUNG

Datum des Abschlusses der internationalen Recherche	Absendedatum des internationalen Recherchenberichts
18.JUNI 1993	06. 07. 93
Internationale Recherchenbehörde	**Unterschrift des bevollmächtigten Bediensteten**
EUROPAISCHES PATENTAMT	BELTZUNG F.C.

Formblatt PCT/ISA/210 (Blatt 2) (Januar 1985)

III. EINSCHLÄGIGE VERÖFFENTLICHUNGEN (Fortsetzung von Blatt 2)

Art *	Kennzeichnung der Veröffentlichung, soweit erforderlich unter Angabe der maßgeblichen Teile	Betr. Anspruch Nr.
A	US,A,3 915 148 (FLETCHER ET AL) 28. Oktober 1975 siehe Spalte 2, Zeile 27 - Spalte 5, Zeile 50; Abbildungen 1-4	1-25
A	US,A,4 329 021 (BENETT ET AL) 11. Mai 1982 siehe Spalte 2, Zeile 60 - Spalte 6, Zeile 16; Abbildungen 1-4	1-25
A	WO,A,9 004 142 (SOLAR ENERGY APPLICATIONS INC.) 19. April 1990 siehe Seite 10, Zeile 1 - Seite 11, Zeile 21; Abbildungen 1-7,26,27	1-25
A	EP,A,0 051 932 (MINNESOTA MINING AND MANUFACTURING CO.) 19. Mai 1982 siehe Seite 16, Zeile 6 - Seite 16, Zeile 26; Abbildung 10	1-25
A	PATENT ABSTRACTS OF JAPAN vol. 7, no. 132 (E-180)(1277) 9. Juni 1983 & JP,A,58 048 477 (NIPPON DENKI KK) 22. März 1983 siehe Zusammenfassung	1-25

ANHANG ZUM INTERNATIONALEN RECHERCHENBERICHT ÜBER DIE INTERNATIONALE PATENTANMELDUNG NR.

EP 9300368
SA 71286

In diesem Anhang sind die Mitglieder der Patentfamilien der im obengenannten internationalen Recherchenbericht angeführten Patentdokumente angegeben.
Die Angaben über die Familienmitglieder entsprechen dem Stand der Datei des Europäischen Patentamts am 18/06/93
Diese Angaben dienen nur zur Unterrichtung und erfolgen ohne Gewähr.

Im Recherchenbericht angeführtes Patentdokument	Datum der Veröffentlichung	Mitglied(er) der Patentfamilie		Datum der Veröffentlichung
WO-A-9117573	14-11-91	DE-A-	4013843	31-10-91
		AU-A-	7777691	27-11-91
		EP-A-	0495933	29-07-92
		JP-T-	4507135	10-12-92
DE-A-4006516	05-09-91	Keine		
DE-A-3934516	18-04-91	Keine		
US-A-3915148	28-10-75	AU-B-	498583	15-03-79
		AU-A-	8681875	26-05-77
		CA-A-	1030832	09-05-78
		DE-A-	2552092	26-05-76
		FR-A,B	2292201	18-06-76
		GB-A-	1524694	13-09-78
		JP-A-	51073645	25-06-76
US-A-4329021	11-05-82	Keine		
WO-A-9004142	19-04-90	AU-A-	4348389	01-05-90
EP-A-0051932	19-05-82	US-A-	4385808	31-05-83
		AU-B-	548406	12-12-85
		AU-A-	7706481	13-05-82
		CA-A-	1160088	10-01-84
		JP-A-	57105703	01-07-82
		SU-A-	1271380	15-11-86

EPO FORM P0473