March 6, 1962 J. C. BISSELL 3,023,766

BACKFLOW PREVENTER WITH VACUUM BREAKER

Filed March 10, 1958 2 Sheets-Sheet 1

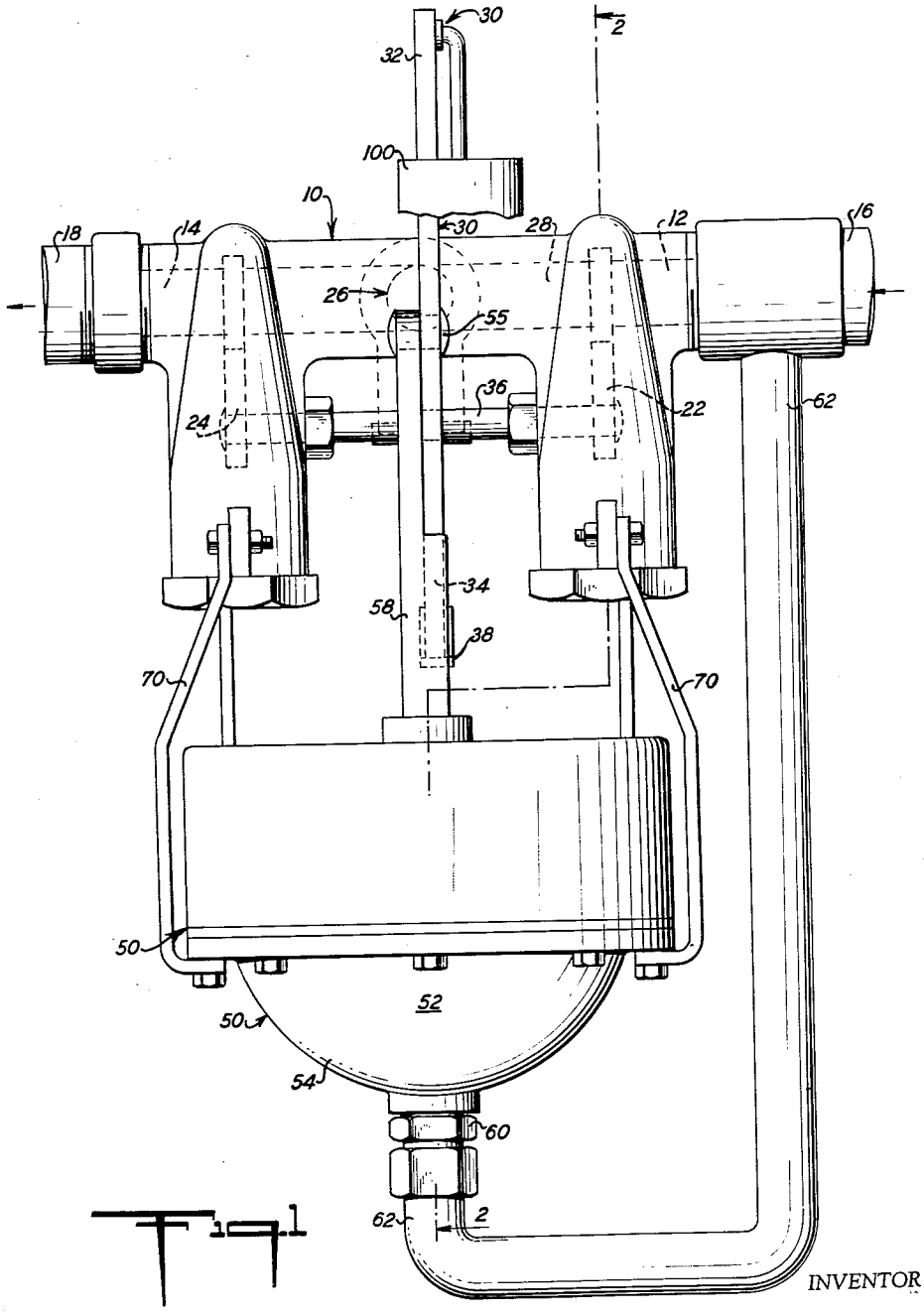

Fig. 1

INVENTOR

JACOB C. BISSELL

BY Fisher Christen & Goodson

ATTORNEYS

March 6, 1962 J. C. BISSELL 3,023,766

BACKFLOW PREVENTER WITH VACUUM BREAKER

Filed March 10, 1958 2 Sheets-Sheet 2

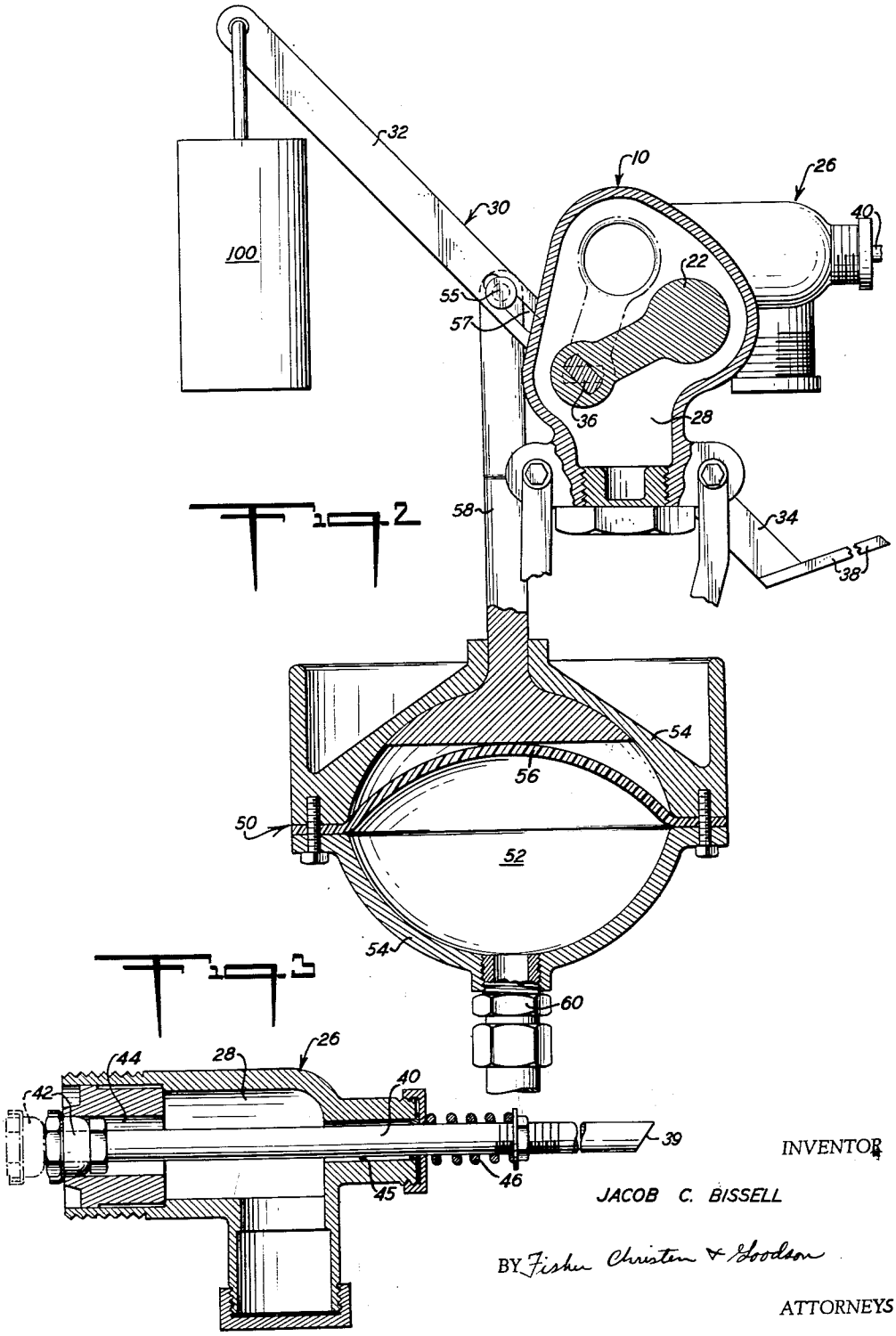

INVENTOR

JACOB C. BISSELL

BY Fisher Christen & Goodson

ATTORNEYS

United States Patent Office

3,023,766

Patented Mar. 6, 1962

1

3,023,766
BACKFLOW PREVENTER WITH VACUUM BREAKER

Jacob Cyril Bissell, 6310 14th St., Detroit 8, Mich.

Filed Mar. 10, 1958, Ser. No. 720,241
3 Claims. (Cl. 137—218)

The present invention relates to a device for preventing backflow in pressure-operated liquid supply lines and apparatus therefor.

One object of the invention is the provision of a backflow preventer which is positive in its action and which is especially effective in preventing back siphonage.

Another object of the invention is the provision of means for protecting a water supply and the like against backflow contamination.

Still another object of the invention is to improve that class of backflow preventers wherein valve means are responsive to liquid pressure.

Other objects of this invention will become more readily apparent from the following detailed description of the invention.

In general, the objects of the invention are achieved by means of a valve assembly actuated by pressure changes in the liquid supply line in which it is positioned. The valve assembly includes two separate simultaneously actuated valves spaced a short distance apart along the supply line to define a breaker section and a third simultaneously operated relief valve for opening the section of line between the first and second valves to the outside atmosphere. In that preferred form of the invention illustrated in the drawings, the first two valves are gate valves, although other valves could be substituted in less advantageous constructions. The third valve may be a simple valve of any known construction so long as it breaks any vacuum which might tend to cause back siphonage.

The gist of the invention is the automatic isolation of a line section and relief opening thereof upon a predetermined drop in the liquid supply flow pressure.

The invention will be better understood by referring to the attached drawings in which:

FIG. 1 is a side elevational view showing a preferred form of the invention with some of the operative elements illustrated in dotted lines:

FIG. 2 is a view partly in section and partly in elevation taken along line 2—2 of FIG. 1; and

FIG. 3 is a sectional view of the relief valve shown in elevation in FIG. 2 and in dotted lines in FIG. 1.

In the form illustrated in the drawings, a backflow preventer, as a unit, is placed in a water supply line adapted to operate in a predetermined pressure range. The same purpose could be accomplished with less facility by assembling separate parts into a liquid supply line.

This preferred form of the invention includes a housing or casing **10** having an inlet **12** and an outlet **14** attached to water inlet line **16** and outlet line **18**, respectively. A gate valve **22** is adapted to close inlet **12** and a gate valve **24** is adapted to close outlet **14**. A relief valve indicated generally at **26** is adapted to open the middle of the casing to the air.

The purpose of the gate valves **22** and **24** is to form a double line closure isolating the interior of the casing to form what may be termed a breaker section **28**. The purpose of the relief valve **26** is to break any vacuum formed in the breaker section **28** which might tend to cause back siphonage, and this is very effective when one of the gate valves gets stuck or fouled.

The three valves are operated simultaneously by a single lever indicated generally at **30** and having a weighted end **32** and a free end **34**.

A lever is mounted on shaft **36** for rotation therewith.

2

One end of shaft **36** carries gate valve **22** and the other end of the same shaft carries gate valve **24** so that lowering the weighted end **32** of lever **30** rotates shaft **36** and valves **22** and **24** to close inlet **12** and outlet **14**. Conversely, raising weighted end **32** of lever **30** opens inlet **12** and outlet **14** in the same way.

The free end **34** of lever **30** carries an abutment means in the form of arm **38** which, in its uppermost position, engages an abutment means **39** at the rear of a shaft **40** of relief valve **26** to force the valve to the open dotted line position of FIG. 3. It will be seen that valve **26** includes, in addition to shaft **40**, a valve head **42** mounted on the shaft and in a casing bore **44**, and a spring **46** normally urging the valve head **42** to remain seated in the bore **44** in the closed position.

Shaft **40** extends through a sealed bore **45** at the rear of the casing to a point well outside the casing and is provided with an abutment surface **39** adapted to be pressed by arm **38** of lever **30** as previously described to force valve head **42** out of bore **44** and open the breaker section to the atmosphere.

The length of the free end **34** of shaft **30** and the length of arm **38** are so constructed that relief valve **26** will be opened just as gate valves **22** and **24** are finally closed by rotation of shaft **36**.

The preferred means illustrated for actuating the operating lever **30** includes a pressure expansible assembly indicated generally at **50**, and a weight **100**. The pressure expansible assembly includes a chamber **52** having rigid walls **54**, a flexible diaphragm **56**, a footed link **58** connected by sliding pin **55** and slot **57** at one end to the weighted end **32** of lever **30** and in engagement at the footed end with the expansible diaphragm **56**, and a pressure inlet **60**. The pressure inlet **60** is provided with a conduit **62** leading to the liquid supply inlet **16** so that the pressure of the liquid supply is reflected in chamber **52** to control the expansion of the diaphragm **56**.

Suitable brackets **70** are provided for associating the pressure expansible assembly with casing **10**.

Thus it will be seen that the weight **100** predetermines the pressure level at which the backflow preventer will be actuated. If the pressure in line **16** is sufficient to enable diaphragm **56** to support the weight **100**, the gate valves **22** and **24** will remain open and relief valve **26** will remain closed.

As soon as the pressure in line **16** becomes low enough that diaphragm **56** can no longer support weight **100**, the weight **100** will force weighted end **32** of lever **30** down, thereby turning shaft **36** and gate valves **22** and **24** to the closed position. This same motion raises free end **34** of lever **30** and just as the gate valves close, arm **38** hits abutment **39** to open relief valve **26**. The backflow preventer remains in this position until the pressure in line **16** rises to a level high enough to permit diaphragm **16** to be expanded to lift the weight **100** on lever **30** through link **50**, whereupon normal operations resume automatically.

In actual tests, this device has proven extremely satisfactory and completely workable under a wide range of adverse conditions. In one test, in a water supply line designed to be operated at between 20 and 90 pounds per square inch, a ¾ inch backflow preventer constructed in accordance with the invention with a 20 pound weight **100** was used to effect full closure at 12 pounds per square inch. Back siphonage was attempted by use of vacuum of up to 25 inches of mercury in the line **16**, but the device continued to perform satisfactorily. When gate valve **22** was purposely fouled with 0.054 inch copper wire, back siphonage was only a vertical distance of 4 feet under 22 inches of mercury. After a short period of time, the gate valve cut through the wire and back siphonage was absolutely stopped.

In such installations it is desirable to provide a container for liquid escaping through relief valve **26**.

Thus it will be seen that the backflow preventer of the present invention is highly resistant to fouling, positive in action and practically fool proof. Certain modifications of the preferred form of the invention may be made by those skilled in the art without departing from the scope of the invention as defined in the following claims.

I claim:

1. A backflow preventer comprising a casing having an inlet and outlet connected in a liquid supply line, two gate valves for opening and closing said inlet and outlet, respectively, a relief valve for the casing, means operatively associated with said casing for operating said valves simultaneously and alternately to open said relief valve as it closes the other valves and to close the relief valve as it opens the other valves, and pressure responsive means in communication with the liquid supply line and operatively connected with said valve-operating means to close the inlet and outlet valves and open the relief valve when the pressure in said line falls below a predetermined level, said valve-operating means including a member for operating said gate valves and a lever mounted intermediate its ends on said member for moving same, one end of said lever operating push means for opening said relief valve and the other end of said lever connected with said actuating means.

2. A backflow preventer comprising a casing having an inlet and outlet connected in a liquid supply line, two gate valves for opening and closing said inlet and outlet, respectively, a relief valve for the casing, means operatively associated with said casing for operating said valves simultaneously and alternately to open said relief valve as it closes the other valves and to close the relief valve as it opens the other valves, and pressure responsive means in communication with the liquid supply line and operatively connected with said valve-operating means to close the inlet and outlet valves and open the relief valve when the pressure in said line falls below a predetermined level, said valve operating means including a single shaft for operating said gate valves and a lever mounted intermediate its ends on said shaft for rotating same, one end of said lever operating push means for opening said relief valve and the other end of said lever connected with said actuating means.

3. A device as set forth in claim 2 wherein said actuating means includes a removable and replaceable weight on the actuated end of said lever, said pressure responsive means including a pressure expansible member attached to the actuated end of said lever, and said weight is opposing expansion of said expansible member whereby different weights may be used at different times to predetermine the pressure at which said valves will be opened and closed.

References Cited in the file of this patent

UNITED STATES PATENTS

1,688,586	Lewis	Oct. 23, 1928
1,826,941	La Mont	Oct. 13, 1931
1,905,625	Fagen	Apr. 25, 1933
2,620,816	Griswold	Dec. 9, 1952
2,638,124	Nickerson	May 12, 1953
2,646,064	Colton	July 21, 1953