No. 705,467. Patented July 22, 1902.

S. A. STAEGE.

TRACK INDICATOR.

(Application filed Oct. 14, 1901.)

(No Model.)

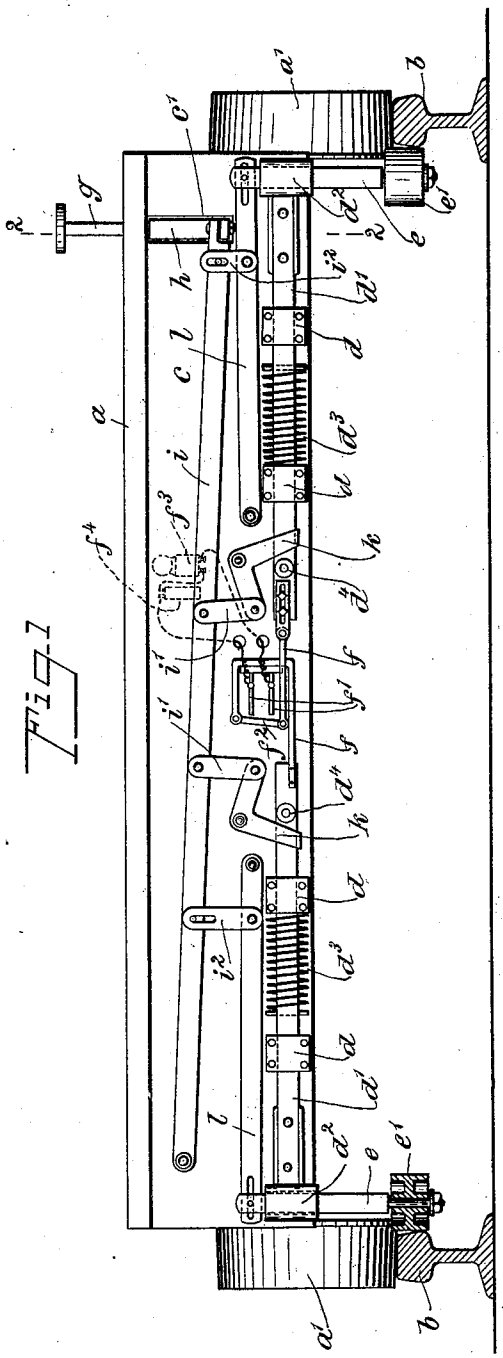

Fig. 1

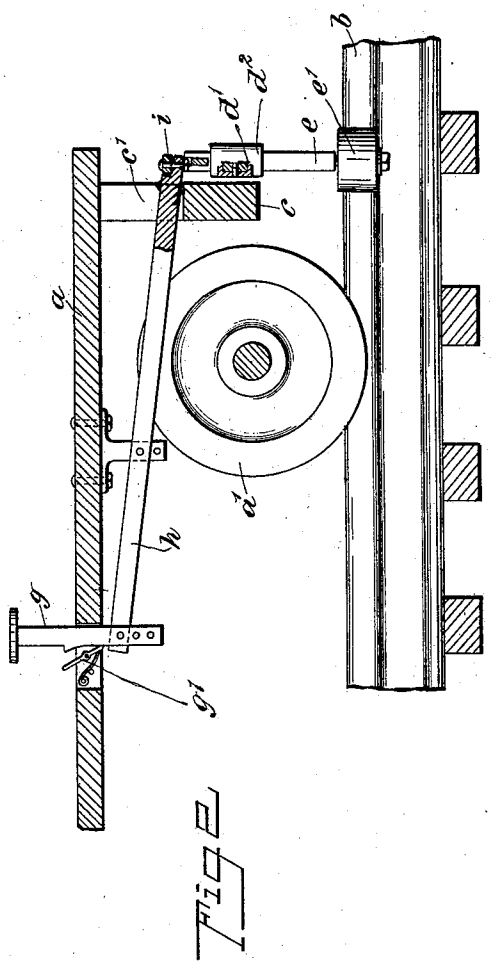

Fig. 2

WITNESSES:

J. A. Bropley

F. B. Owens.

INVENTOR

Stephen A. Staege

BY Munn & Co

ATTORNEYS

THE NORRIS PETERS CO., PHOTO-LITHO., WASHINGTON, D. C.

UNITED STATES PATENT OFFICE.

STEPHEN A. STAEGE, OF HUTCHINS, NEAR MATTOON, WISCONSIN.

TRACK-INDICATOR.

SPECIFICATION forming part of Letters Patent No. 705,467, dated July 22, 1902.

Application filed October 14, 1901. Serial No. 78,580. (No model.)

To all whom it may concern:

Be it known that I, STEPHEN A. STAEGE, a citizen of the United States, and a resident of Hutchins, near Mattoon, in the county of Shawano and State of Wisconsin, have invented new and useful Improvements in Track-Indicators, of which the following is a full, clear, and exact description.

This invention relates to a device adapted to indicate variation in the distance of railway-rails from each other, so as to enable persons to detect spreading of the rails. The appliance is intended especially to be applied to hand-cars, so that the trackmen in going over the road need only to run the car over the rails to detect any spreading thereof.

This specification is a specific description of one form of my invention, while the claims are definitions of the actual scope thereof.

Reference is to be had to the accompanying drawings, forming a part of this specification, in which similar characters of reference indicate corresponding parts in both the figures.

Figure 1 is an end elevation of the invention, and Fig. 2 is a section on line 2 2 of Fig. 1.

a indicates the car or other vehicle on which the apparatus is carried. This car has wheels *a'*, which run over the rails *b*. Fastened to the bottom of the floor of the car is a vertically-extending frame-board *c*, which carries the indicator.

d indicates two pairs of boxes fastened in horizontal line on the frame *c* and carrying two horizontally-reciprocal bars *d'*, at the outer end of each of which are vertically-extending guides d^2. In these guides slide freely the axles *e* of the gage-wheels *e'*, these wheels normally running along the inner sides of the rails *b*.

d^3 indicates springs for pushing outward the bars *d'*, causing the wheels *e'* normally to engage the rails. Each bar *d'* carries at its inner end an extension *f*, and these extensions are projected past each other, and one is bent, as shown, one extension carrying contact-fingers *f'* and the other a switch-blade f^2, which blade is also connected to the first or bent extension. These parts are so arranged that when the bars *d'* spread the blade f^2 connects together the fingers *f'*. These fingers form part of an electric circuit, in which is included a bell f^3 and battery f^4, so that when the circuit is closed the bell is sounded. When the parts are as in Fig. 1, the bell is inactive; but should the rails be spread this will allow the bars *d'* to move outward, and the bell will then sound to indicate the spread referred to.

g, Fig. 2, indicates a push-rod to be actuated by one's foot and working with a dog *g'*, which holds the rod down below the position shown. This push-rod is connected below the floor of the car with a longitudinally-extending lever *h*, that runs through an opening *c'* in the frame *c* and is connected to a lever *i*. The lever *i* extends transversely of the car along the frame *c* and is fulcrumed at the end opposite the lever *h*.

k indicates two bell-crank levers fulcrumed to the frame *c* and having forked ends respectively straddling the bars *d'*.

d^4 indicates rollers on the bars *d'*, against which the forked ends of the bell-crank levers *k* bear to draw the bars inward against the springs d^3. The bell-crank levers *k* are connected to the lever *i* by links *i'*, so that when the lever *i* is raised the bars *d* are moved together.

The axles *e* are sustained in the guides d^2 by levers *l*, fulcrumed to the frame *c* at their inner ends and having pin-and-slot connections with the axles *e*.

i^2 indicates links connecting the lever *i* with the levers *l*, so that when the lever *i* is raised the levers *l* will act to raise the axles *e*.

Now it will be seen that while the bars *d'* are kept normally extended by the springs d^3 upon depressing the push-rod *g* the lever *i* may be thrown not only to draw the bars *d'* in, but also to lift the axles *e* and the wheels *e'*, and the parts may be held in this position by the dog *g'*. When it is desired to hold the parts inactive, the push-rod *g* should be moved down, thus drawing the axles *e* inward away from the rails and simultaneously raising them with the wheels *e'* out of the horizontal plane thereof. When it is desired to allow the indicator to operate, the dog *g'* should be released, and the springs d^3 will throw the parts into operation. It will be observed that the slots in the levers *l* and

the arrangement of the bell-crank levers k, with the rollers d^4, provide for the unrestrained inward movement of the bars d' independently of the parts l and k.

Concerning the axle e, it is obvious that its wheel e' may be omitted and the axle allowed to run along the rail without the wheel without departing from the spirit of my invention.

Various changes in the form, proportions, and minor details of my invention may be resorted to without departing from the spirit and scope thereof. Hence I consider myself entitled to all such variations as may lie within the scope of my claims.

Having thus described my invention, I claim as new and desire to secure by Letters Patent—

1. The combination of members adapted to engage the track-trails, means pressing each of said members into active position, extensions connected with said members, the extensions being crossed and projected past each other, contact devices carried on the ends of the extensions and engaged together by a spreading movement of said yielding members, and an electrical indicating device controlled by the contact device.

2. The combination of a slidable member, an axle slidable therein and carried thereby, a wheel on the axle, means for simultaneously sliding the said slidable member and the axle, and an indicating device actuated from the said sliding member.

3. The combination of a slidable member, an axle slidable transversely therein and carried thereby, a wheel on the axle, means for sliding the said slidable member and the axle, and an indicating device actuated from the said sliding member.

4. The combination of a slidable member, an axle carried slidably thereby and transversely thereto, a wheel on the axle, an indicating device controlled from the said slidable member, levers connected respectively to the axle and slidable member, and means for throwing the levers, for the purpose specified.

5. The combination of a slidable member, an axle carried slidably thereby and transversely thereto, a wheel on the axle, an indicating device controlled from the said slidable member, levers connected respectively to the axle and slidable member, a third lever, links connecting the third lever with the first two levers, and means for operating the third lever.

6. The combination of a slidable member, an axle carried slidably thereby and transversely thereto, a wheel on the axle, an indicating device controlled from the said slidable member, levers connected respectively to the axle and slidable member, a third lever, links connecting the third lever with the first two levers, and means for operating the third lever, said means comprising a push-rod connected with the third lever and a dog for holding the push-rod.

7. The combination of two yielding members adapted to be actuated by inequalities in track-rails, extensions on said members, said extensions being crossed and projected past each other, a blade hung between the extensions, and an electrical signaling device comprising contacts adapted to be connected by the blade when moved to engage them.

8. The combination of a slidable member, an axle slidably carried therein, a connection between the slidable member and the axle whereby they may be moved in unison in and out of operative position, means exerting a constant pressure on the said slidable member, and an indicating device actuated from the slidable member.

In testimony whereof I have signed my name to this specification in the presence of two subscribing witnesses.

STEPHEN A. STAEGE.

Witnesses:
E. S. TRADEWELL,
A. J. STAEGE.