Feb. 16, 1965 E. STRAUSS 3,169,880

TRANSFER SHEET AND SHEET ASSEMBLY

Filed July 9, 1962 2 Sheets-Sheet 1

FIG. 1A

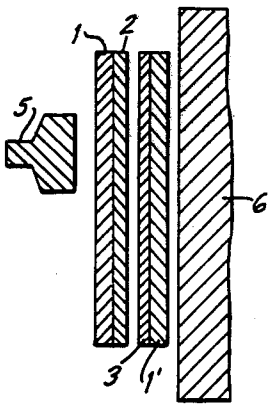

FIG. 1B

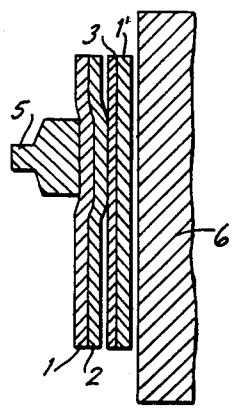

FIG. 1C

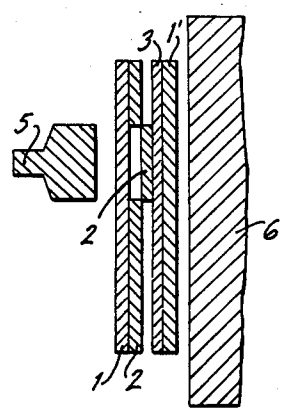

FIG. 2A

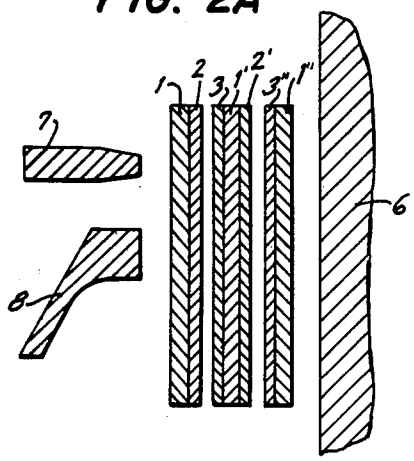

FIG. 2B

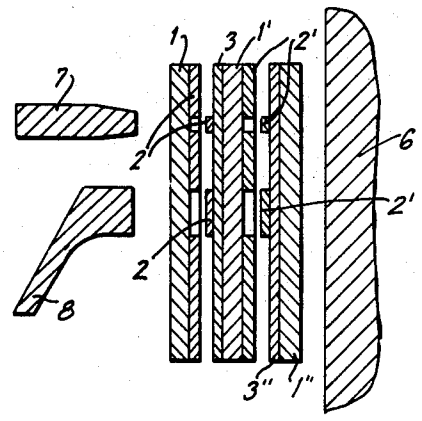

1,1'1" = CARRIER SHEETS
2,2'2" = TRANSFER LAYERS
3,3'3 = TAKE UP LAYERS
5, 7, 8, = TYPEWRITER KEYS
6 = SUPPORTING TYPEWRITER ROLLER
9 = BODIES OF TRANSFER LAYER
10 = CANALS

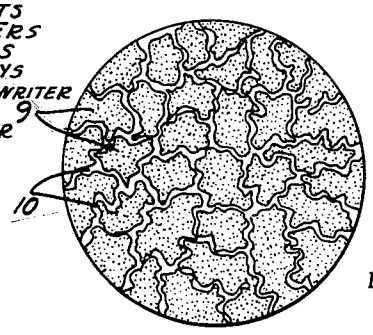

FIG. 3

INVENTOR.
EUGEN STRAUSS

BY

Michael S. Striker
Attorney

Feb. 16, 1965 E. STRAUSS 3,169,880

TRANSFER SHEET AND SHEET ASSEMBLY

Filed July 9, 1962 2 Sheets-Sheet 2

FIG. 4a

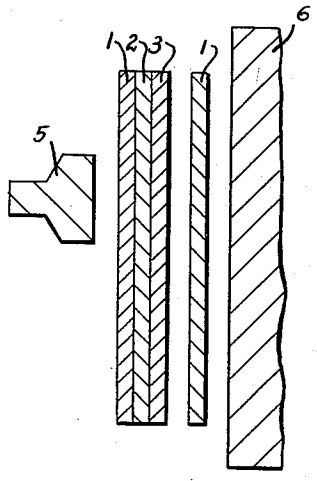

FIG. 4b

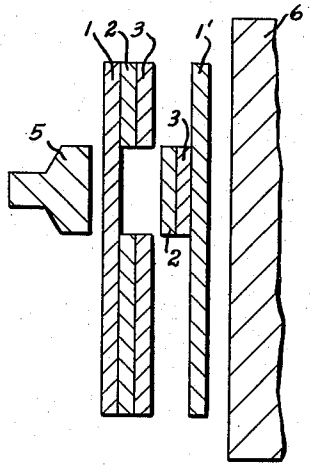

FIG. 5

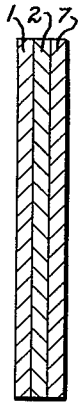

1,1' = CARRIER SHEETS
2 = TRANSFER LAYER
3 = TAKE UP LAYER
5 = TYPEWRITER KEY
6 = SUPPORTING SURFACE (TYPEWRITER ROLLER)
7 = PROTECTIVE LAYER

INVENTOR.
EUGEN STRAUSS

BY

Michael S. Striker

United States Patent Office 3,169,880 Patented Feb. 16, 1965

3,169,880

TRANSFER SHEET AND SHEET ASSEMBLY

Eugen Strauss, Via Cassiodoro 20, Milan, Italy

Filed July 9, 1962, Ser. No. 208,529
Claims priority, application Italy, July 8, 1961, A 14,588/61
32 Claims. (Cl. 117—36.3)

The present invention relates to a copy paper or the like, and more particularly to a paper which can be used for making a plurality of copies without use between the sheets of paper of the well known carbon paper.

The present application is a continuation-in-part of my copending application Serial No. 136,711, filed September 5, 1961, and entitled Copy Paper or the Like, and now abandoned.

Papers are known for making several copies of bills, statements or the like without inserting between the sheets on which the hand or machine written (typewriter for example) notices are placed, carbon paper or the like. Papers of this type in general consist of a sheet; these papers have generally consisted of a writing layer applied to the rear face of a sheet with the front face of the sheet being adapted to accept the writing. By superposing the rear face of such sheet with the front face of another such sheet and writing on the front face of the first sheet a copy of the writing is obtained on the front face of the underlying sheet.

However, the making of several copies without carbon paper using sheets of the type described above involves numerous difficulties which will be further clarified below.

In order to place the problem in its true light it is necessary to shortly describe what the usual carbon paper consists of.

Carbon paper of the known type in general consists of a carrier sheet of paper or the like on the back face of which is placed a writing layer which generally consists of a homogeneous, pasty mass of wax and a black or other colored writing pigment. By making an impression by means of a typewriter or by hand writing a portion of the writing layer mass on the rear face is carried over to a contacting paper sheet placed in contact with the front face. This writing process can be repeated several times until the carbon paper is used up and then thrown away.

There are, however, numerous uses, for example in the case of billing, account statements, carbon copy book records and the like in which a single use of the copy paper is sufficient. In these cases the possibility has suggested itself of coating the backside of the original with the mass of the type used for carbon paper so that the sheet lying directly under the original can directly receive a copy of what is written or typed on the original.

The use of this process has, however, involved the great difficulty that the hand of the user upon contacting the rear face of the original was dirtied. Many attempts have accordingly been made to solve this problem of dirtying and smearing of the hands.

One of the attempted solutions, which is described in German Patent No. 1,041,981, suggests the coating of the rear face of one sheet with the pigment and coating the front face of the sheet to receive the copy with a wax layer. By writing by hand or with a typewriter the rear face containing the pigment sticks to the front face containing the wax and the corresponding pigment is transferred to the wax layer to effect the making of the copy. However, this method also involves various difficulties.

Thus, for example, it is not possible to write on the wax layer of the copy paper on which the layer of color is to be transferred with normal writing means because the wax hinders the deposition of a remaining residue of ink, printing ink or graphite. Furthermore, the obtained copy

is not clear and neat, because the taking off of the coloring matter by the waxed side is not clear and sharp and also takes place with some tearing which also makes it quite probable that the wax does not take up the color evenly, particularly in view of the fact that the wax due to various physical factors such as room temperature and humidity is influenced and changes at various places on the sheet. Furthermore, and of extreme importance, the obtained copy is very sensitive and can easily be wiped off, for example by means of a finger passed across the copy, and in addition the sheet becomes dirty quite easily. This is all due to the fact that the coloring matter is not well fixed to the take-up layer.

It is accordingly a primary object of the present invention to provide a copy paper and a copy paper arrangement which avoids all of the above enumerated difficulties.

It is a more particular object of the present invention to provide a copy paper which can be used only a single time for the making of copies, but which can be used for making numerous copies all of which are very sharp and clear.

It is yet another object of the present invention to provide a copy paper which can be handled without any possibility of dirt being transferred from the pigment coated side of the copy paper to the hands, or from the hands to the writing side of the copy paper.

It is yet another object of the present invention to provide a copy paper which is coated on at least one side with a transfer layer, and to provide a copy paper which is coated on at least one side with a take-up layer. In accordance with the present invention the transfer layer will be taken up substantially only by means of a take-up layer of the type used in accordance with the invention so that if other sheets of paper are placed in contact with the transfer layer copies will not be made on the other sheet of paper and consequently the pigment in the transfer layer will not rub off on the hands or on any paper.

It is a further object of the present invention to provide a copy paper which has at least one face coated with a special take-up layer for taking up the transfer layer from the rear face of another sheet of copy paper in accordance with the present invention, which take up layer, however, can be used and will accept writing from any other source.

Other objects and advantages of the present invention will be apparent from a further reading of the specification and of the appended claims.

With the above and other objects in view, the present invention mainly comprises a copy paper or the like, comprising a carrier sheet provided on one face thereof with a transfer layer consisting essentially of a resinous substance selected from the group consisting of polyvinyl acetate, mixed polymerisates of polyvinyl acetate, colophonium, polymethylacrylate, polymethylmethacrylate, polycarbonates, polystyrene, polychloroprene, styrene-butadiene copolymers, synthetic cellulose resins, coumarone rosin and coumarone-phenol resins, of at least one plasticizer for the resinous substance, of at least one organic fixing agent selected from the group consisting of tannic acid, gallic acid, digallic acid, salicylic acid, phenyl salicylate, 4-butyl-phenyl-salicylate, 5-chloro-2-hydroxy-benzophenone, 2,4-dibenzoyl-resorcin, phenol phthalic acid, and pyrogallic acid, of at least one inorganic colloidal substance selected from the group consisting of bentonite, kaolin, calcium carbonate, calcium sulfate, calcium phosphate, and zinc oxide, and of a pigment whereby upon the making of an impression on the opposite face of the carrier sheet when the one face thereof is in contact with a face of a take-up sheet sensitive to and adapted to receive the transfer layer a portion of the transfer layer corresponding to the impression is trans-

ferred to and adheres to the take-up sheet, thereby making a copy of the impression thereon.

The present invention also comprises a copy paper or the like comprising a carrier sheet provided on one face thereof with a take-up layer sensitive to and adapted to receive impressions of a transfer layer, the take-up layer consisting essentially of a dried resinous substance selected from the group consisting of acrylic polymers, vinyl polymers, acrylic-vinyl mixed polymers, polyolefines, ethyl cellulose, benzyl cellulose, methyl cellulose, carboxymethyl cellulose, polydiolefines, diolefine-styrene mixed polymers, polycarbonates, colophonium, copal, abietic-maleic resins and coumarone resins, and of at least one plasticizer in which the resinous substance is soluble.

According to one preferred embodiment of the present invention, the same contemplates a copy paper or the like, comprising, in combination, a carrier sheet on one face thereof; a transfer layer consisting essentially of a resinous substance selected from the group consisting of polyvinyl acetate, mixed polymerisates of polyvinyl acetate, colophonium, polymethylacrylate, polymethylmethacrylate, polycarbonates, polystyrene, polychloroprene, styrene-butadiene copolymers, synthetic cellulose resins, coumarone resin and coumarone-phenol resins, of at least one plasticizer for said resinous substance, of at least one organic fixing agent selected from the group consisting of tannic acid, phthalic acid, gallic acid, digallic acid, salicylic acid, phenyl salicylate, 4-butyl-phenyl-salicylate, 5-chloro-2-hydroxy-benzophenone, 2,4-dibenzoyl-resorcin, phenol and pyrogallic acid, of at least one inorganic colloidal substance selected from the group consisting of bentonite, kaolin, calcium carbonate, calcium sulfate, calcium phosphate and zinc oxide, and of a pigment; and a take-up layer sensitive to and adapted to receive impressions of the transfer layer, said take-up layer adhering to the free face of said transfer layer and consisting essentially of a dried resinous substance selected from the group consisting of acrylic polymers, vinyl polymers, acrylic-vinyl mixed polymers, polyolefines, ethyl cellulose, benzyl cellulose, methyl cellulose, carboxymethyl cellulose, polydiolefines, diolefine-styrene mixed polymers, polycarbonates, colophonium, copal, abietic-maleic resins and coumarone resins, and of at least one plasticizer in which said resinous substance is soluble, whereby said take-up layer is adapted to receive impressions transferred thereto from a transfer layer of the type described, and whereby said transfer layer when in contact with a take-up layer of the type described is adapted to transfer impressions thereto.

It is possible in accordance with the present invention to have a sheet of copy paper in which only the rear face is treated so as to have a transfer layer and in which the front face is ordinary front face. Of course such copy sheet could only be used as the original.

It is also possible in accordance with the present invention to have a copy sheet in which the rear face is not treated and does not contain a transfer layer but only the front face is treated so as to have a take-up layer. Such copy paper could only be used for the making of the last copy.

It is also possible in accordance with the present invention to provide a copy paper which has one face coated with a take-up layer as described above, i.e. the front face, and which has the other face, i.e. the rear face, coated with a transfer layer as described above. A copy paper of this type can be used either as the original, as the last copy, or for intermediate sheets for making copies and for transferring copies.

Furthermore, according to the present invention, a copy paper may be provided comprising a carrier sheet having one face essentially uncoated and on its other face two layers, namely a take-up layer, and a transfer layer interposed between the carrier sheet and the take-up layer. It is also proposed according to another embodiment of the present invention to cover the exposed face of the transfer layer (in a case where the same is not covered by an adhering take-up layer) with a protective, pigment-containing layer which will not interfere with the transfer of portions of the transfer layer onto the take-up layer of an underlying sheet.

The transfer layer in accordance with the present invention should not have a continuous film so that the separation as a result of typing or writing is promoted and the mass is so to say partially transferred to the take-up layer of the other sheet.

It is further necessary in accordance with the present invention that the transfer layer be dry, but that it adhere sufficiently to the carrier sheet or the like so that the separation of portions therefrom can only occur by an energetic hitting with a typewriter key or pressure and does not occur by simple contacting of the transfer layer with the take-up layer of another sheet.

Considerable experimentation has shown that only resinous substances of the type described above can be used for the formation of the transfer layer in accordance with the present invention.

The molecular weight of the resinous substance may vary within rather wide limits, for example from 10,000 to as high as 400,000, or more, depending on the particular resin. Thus, for example, in the case of polyvinyl acetate the molecular weight may be between 10,000 and 200,000, and is preferably about 60,000. In the case of copolymers of polyvinyl chloride and polyvinyl acetate the molecular weight is preferably between 10,000 and 30,000 and is preferably about 12,000. The colophonium which is used is the natural resinous substance.

The molecular weight of the polymethylacrylate is preferably between 10,000 and 200,000, and most preferably about 60,000, and the same applies with respect to the molecular weight of the polymethylmethacrylate. The molecular weight of the polycarbonate is preferably between about 30,000 and 100,000, and most preferably about 70,000, the molecular weight of the polystyrene is preferably between about 10,000 and 150,000, most preferably about 50,000, and the molecular weight of the polychloroprene resin is preferably between about 100,000 and 400,000, and most preferably about 150,000. The most preferred molecular weight of the cumarone resins is about 20,000.

In general most of the commercially available resinous substances of the above types may be used for the purposes of the present invention. The following list is given in order to help others to readily find the available commercial resinous substances for the purposes of the present invention.

Polystyrene:
- Styron—Dow Chemie Company, Midland, Mich.
- Stiroplast—Montecatini, Milan, Italy
- Polystyrol—B.A.S.F., Ludwigshafen (Rhine), Germany
- Lustron—Monsanto, Springfield, Mass.

Polycarbonate:
- Lexan—General Electric Co., Pittsfield, Mass.
- Makrolon—Farbwerke Bayer, Leverkusen, Germany

Polychloroprene:
- Chlortex—Caffaro, Milan, Italy
- Alloprene—I.C.I, London, England
- Parlon—Hercules Powder Co., Inc., Wilmington, Delaware

Sytrol-Butadiene Copolymer:
- Edistir RRE—Sice-Edison, Milan, Italy
- Butaprene—Firestone, Akron, Ohio

Polyvinylacetate:
- Movilith—Farbwerke Hoechst, Germany
- Gelva—Shawinigan Prod. Corp., N. Y.
- Solvar—Shawinigan Prod. Corp., N. Y.
- Arvinil—Arca, Milan, Italy

Polyvinylchloride-acetate copolymer:
Geon 427—B. F. Goodrich, Cleveland, Ohio
Vinylite VYHH—Bakelite Corp.
Krene—Carbide and Carbon Chemical Company, New York
Solvic—Solvay, Milan, Italy
Polymethylmethacrylate:
Plax methacrylate—Plax Corp., Hartford, Conn.
Plexiglas—Rohm & Haas Company, Philadelphia, Pa.
Diakon—I.C.I., Ltd., London
Crillat Emulsionen—Montecatini, Milan, Italy
Acrysal Emulisionen—Rohm & Haas Company, Philadelphia, Pa.

The amount of the resinous substance in the transfer layer may vary within wide limits. It is generally maintained in an amount of about 4–20% of the weight of the transfer layer. The most preferred amount will vary depending on the particular resin. Thus, for example, in the case of polyvinyl acetate the amount of resinous substance is preferably between 4–12% of the transfer layer, and most preferably about 5%. In the case of vinyl-acrylic mixed polymers the amount is preferably between 4–12%, and most preferably about 9%. The amount of phenolcumarone resin is preferably about 6–20%, and most preferably about 10%. The amount of chloroprene is preferably about 6–20% and most preferably about 12%. In the case of polycarbonate the amount is preferably about 8–12%, and most preferably about 11%. In the case of styrene-butadiene mixed polymers the amount is preferably about 6–15% and most preferably about 10%. For polyvinyl acetate the amount is preferably 4–12% and most preferably about 7%. For polyvinylchloride-acetate mixed polymers the amount is preferably 8–15% and most preferably about 13%.

The plasticizer for the resinous substance of the transfer layer may be any normal plasticizer for these resinous substances of either the primary or the secondary type. Among the suitable plasticizers may be mentioned castor oil, dibutyl phthalate, dioctylphthalate, diamyl phthalate, tricresyl phosphate, cyclohexyl-p-toluene sulfonamide, dioctyl sebacate, dibutyl stearate, tributyl phosphate, ricinoleic acid, etc. The amount of the plasticizer for the resinous substance in the transfer layer is generally between 1–4.5 times the amount of the resinous substance.

The organic fixing agents which are used in the transfer layer of the present invention are preferably present in an amount of between 15 and 90% of the amount of the resinous substance. These organic fixing agents are mainly aromatic substances and their use is of extreme importance for the purposes of the present invention.

By an action which is as yet unexplained, these substances have a protective and fixing action on the transfer layer so that the same obtains the desired dry condition and is anchored securely with the paper carrier or the like. Moreover, these fixing agents have the effect of breaking up the dry transfer layer in mircoscopically small, closely adjacent bodies which are however separate from each other which, as is shown in FIG. 3 of the drawing, are in the form of small, dark or black islands through which narrow, winding canals are separated from each other. This is seen by microscopic examination of the transfer layer, and FIG. 3 is a depiction of a portion of the transfer layer when viewed through a microscope.

This characteristic form which is obtained only by forming a transfer layer in accordance with the present invention is obtained only by the use of the above defined fixing agents, of which tannin is a typical example. This substance has not only the desired fixing and protecting action, but it has the effect of providing for the formation of these islands which give the discontinuous structure of the transfer layer, and which is due to possibly complicated not easily definable precipitation or coagulation phenomena.

In this connection it should be noted that normal carbon paper when viewed through a microscope has the appearance of a plurality of small bodies extending upwardly from a homogeneous body, the small bodies consisting of carbon black.

The inorganic colloidal substances are present in the transfer layer in accordance with the present invention in an amount of about 1.15 to 1.7 times the amount of the resinous substance plus the plasticizer therefor. In other words, for each 100 parts of resinous substance plus plasticiser the transfer layer will contain preferably between about 115 and 170 parts of the inorganic colloidal substance.

These inorganic colloidal substances such as bentonite, kaolin, calcium carbonate, gypsum and the like are essential for the formation of the transfer layer. The substances are not only necessary for the formation of a dry, non-dirtying transfer layer, but they are also extremely important for the complete transfer of the layer onto the take-up layer.

The pigments which are used in the transfer layer of the present invention are any of the pigments normally used for carbon paper or other normal copying papers. The most suitable pigment is, of course, carbon black, which is used for black writing papers. Other pigments which may be used are, for example, milori blue, or the like. The amount of carbon black in the transfer layer is generally between about 2.5–20% of the dry weight, the amount depending to some extent on the type of the used carbon black, and also whether it is desired to obtain a grayish or a deep dark image. The most preferred amount of carbon black is about 12% of the dry weight of the transfer layer.

For blue copies it is preferred to use a pigment such as milori blue in an amount of about 10–35% by weight, and preferably in an amount of about 25% by weight.

The carrier sheet on which the transfer layer is located (and also on which a take-up layer may be located) may be of any usual type of carrier sheet. Most preferred is, of course, paper, mainly opaque paper, that is paper filled with titanium white, zinc white, barite, etc. The percentage content of such fillers in the paper is the normal amount, namely about 8–15% by weight. The amount of filler is generally such that the paper has a pure white color and also that the solution which is applied to the paper to form the take-up layer does not become absorbed by the paper and color thereby.

It is not necessary to use paper as the carrier sheet, it is also possible to use plastic foils, such as polyvinyl acetate, polymethylene, mylar, polyester films, etc.

The carrier sheet is preferably of a thickness of about 0.04–0.8 mm., and most preferably of a thickness of about 0.05 mm. The transfer layer is preferably of a thickness of about 0.005 mm.–0.015 mm., and most preferably of a thickness of about 0.01 mm. The take-up layer is preferably of about the same thickness as the transfer layer, or slightly less.

The take-up layer on the carrier sheet according to the present invention consists essentially of a dried solution or suspension of the resinous substances described as suitable for the take-up layer and at least one plasticizer in which the resinous substance is soluble, i.e. a primary plasticizer for the resinous substance. The amount of the primary plasticizer is preferably about 10–50% by weight, and most preferably about 25% of the weight of the resinous substance.

The resinous substances are of the same types as described for the transfer layer and the plasticizer should be a primary plasticizer such as tricresyl phosphate, dioctyl phthalate, dioctyl sebacate, cyclohexyl-p-toluene sulfonamide, etc.

The take-up layer in accordance with the present invention has the property of selectively taking up and receiving an impression from the transfer layer of the present invention.

In addition, the take-up layer not only is complementary to and can take up the transfer layer from a sheet of paper carrying the transfer layer, but it can also be written on with any normal writing means such as a typewriter, pen, pencil, etc., that can be used for any normal type of paper.

The application of the transfer layer and/or the take-up layer to the carrier material of paper or another substance such as the plastic film or sheet involves no difficulties and it is not necessary to use any special machines therefor. The same machines and apparatus can be used as in the production of normal carbon paper. The take-up layer can be applied by known methods on a paper sheet or sheet of a polymeric material, for example:

(*a*) By means of a coating device with a doctor blade,
(*b*) by rotation pressure or printing system,
(*c*) by means of a pressure device with rubber rollers,
(*d*) by means of a funnel dosing device under pressure or free flowing,
(*e*) according to the method with reverse rotating rollers (reverse roller),
(*f*) by means of air or gas spraying devices.

The take-up layer can be applied simultaneously with the coating of the transfer layer by means of a device which is adapted to simultaneously coat a thin film on two sides either by the same or different means.

Among the numerous advantages of the copy papers or the like produced in accordance with the present invention are the following:

(1) Elimination of carbon paper in the making of several copies with a typewriter or other analogous system;

(2) Due to the elimination of the need for separate sheets of carbon paper when making copies it is possible when making any particular number of copies to simplify the rolling up of the sheets in the typewriter roller since the number of sheets is of course reduced by the elimination of the carbon paper;

(3) Simple method of production;

(4) Relatively low material costs;

(5) Great degree of ultiziation of the dried and fixed printing dye.

In this connection it should be noted that when making copies using the copy paper of the present invention the corresponding impression made on the front of a sheet of paper having a transfer layer on the rear face, the transfer layer being in contact with the take-up layer of another sheet of copy paper, is transferred from the transfer layer to the take-up layer; the transfer is to such extent that when viewing the rear face of the first sheet the same is actually white at the point or points corresponding to the impression made so that the effect is achieved that the copy on the take-up layer of the copy sheet is extremely sharp and distinct, even in the case of numerous copies; and

(6) The copy paper and the transfer layer thereon can be handled without any danger of dirtying of hands or clothing.

The novel features which are considered as characteristic for the invention are set forth in particular in the appended claims. The invention itself, however, both as to its construction and its method of operation, together with additional objects and advantages thereof, will be best understood from the following description of specific embodiments when read in connection with the accompanying drawings, in which:

FIG. 1 (comprising FIGS. 1*a*, 1*b* and 1*c*) is a diagrammatic, cross sectional illustration of the transfer of copy with copy sheets according to one embodiment of the present invention;

FIG. 2 (comprising FIGS. 2*a* and 2*b*) is a diagrammatic, cross sectional illustration of the transfer of copy using copy sheets in accordance with another embodiment of the present invention;

FIG. 3 is an enlarged view looking down at a portion of a transfer layer in accordance with the present invention;

FIG. 4 (comprising FIGS. 4*a* and 4*b*) is a cross sectional illustration of the transfer of copy with copy sheets according to another embodiment of the present invention; and

FIG. 5 is a schematic cross sectional view of a transfer sheet according to the present invention which includes a protective layer covering the free face of the transfer layer.

Referring more particularly to the drawings, and parparticularly to FIG. 1, a copy paper sheet **1**, **2** comprising a carrier sheet **1** and a transfer layer **2** is placed adjacent a copy paper sheet **1'**, **3** comprising a carrier sheet **1'** and a take-up layer **3** against a supporting surface **6** which corresponds to the roller of a typewriter. When the typewriter key **5** strikes against the carrier sheet **1**, **2** the transfer layer **2** comes in contact with the take-up layer **3** and firmly adheres thereto so as to form the corresponding impression on the copy sheet **1'**, **3**.

FIG. 2 illustrates the making of copy with three copy sheets in accordance with the present invention. The copy sheet **1**, **2** comprising a carrier sheet **1** and a transfer layer **2** is placed adjacent a copy sheet **1'**, **2'**, **3**, comprising a carrier sheet **1** having on one face thereof a take-up layer **3** and on the other face thereof a transfer layer **2'**, this sheet **1'**, **2'**, **3** being placed between sheet **1**, **2** and a copy sheet **1''**, **3''** comprising a carrier sheet **1''** and a take-up layer **3''**. This assembly of three sheets is placed against a typewriter roller **6** and when the typewriter keys **7** and **8** strike the first sheet the corresponding image from the transfer layer **2** adheres to the take-up layer **3** of the intermediate copy sheet **1'**, **2'**, **3**, and the same image **2'** is transferred therefrom to the carrier sheet **1''**, **3''** where it adheres to the take-up layer **3''**.

FIG. 3 illustrates that bodies of transfer layer **9** are separated by canals **10** so that the bodies are much like islands. Of course this illustration is greatly enlarged. The effect of the fact that the transfer layer is in the form shown is that the transfer of the image from the transfer layer to a take-up layer is greatly facilitated.

The following examples are given to further illustrate the present invention. The scope of the invention is not, however, meant to be limited to the specific details of the examples. The Examples 1–9 relate particularly to transfer layers and the Examples 10–16 relates particularly to take-up layers in accordance with the present invention.

Example 1

A solution A is prepared from 4 parts of polyvinyl acetate of molecular weight 60,000 and 2 parts of gallic acid in 44 parts of 94% alcohol as solvent. In a three cylinder raffination machine, there is also prepared in a separate part of the machine a paste B consisting of 20% of carbon black, 5% of dioctyl phthalate, 15% of castor oil, 20% of calcium sulfate, 10% of zinc oxide, 15% of methyl glycol and 15% of butyl alcohol.

The raffinate portion B is stirred with solution A in a ratio of 50% of paste B and 50% of solution A until a homogeneous copying ink is obtained. The resulting mass is then applied to a carrier sheet, for example of paper, and dried. It fixes itself to the carrier sheet. The application is carried out by known methods and the drying and self-fixation can be carried out by passing a stream of air tangentially against the self-fixing transfer layer applied to the carrier sheet.

Example 2

A transfer layer composition is prepared in the same manner as in Example 1 and applied to a carrier sheet. However, instead of the solution A, a solution C is prepared consisting of 4.5 parts of a vinyl-acrylic mixed polymerisate, 0.8 part of tannin, 25.2 parts of ethyl acetate and 19.5 parts of 94% alcohol, and instead of the paste B, a paste D is prepared consisting of 10% of carbon black,

10% of titanium dioxide, 15% of dioctyl sebacate, 30% of calcium sulfate, 20% methyl glycol and 15% of butyl alcohol.

The final mass consists of 50% of the paste D and 50% of the solution C and the transfer layer is obtained after evaporation of the solvent.

The presence of titanium dioxide in this example is for the purpose of obtaining a transfer layer with a less intensive color, that is with a grayish color instead of a dark black color.

Example 3

A transfer layer composition is prepared as in Example 1 and applied to a carrier upon which it fixes itself. Instead of solution A a solution E is prepared consisting of 5 parts of phenol-cumarone resin of molecular weight 20,000, 1 part of 5-chloro-2-hydroxybenzophenone and 44 parts of 94% alcohol as solvent. Instead of the paste B a paste F is prepared consisting of 30% of ferric-ferrocyanide (Berlin blue), 30% kaolin, 10% dioctyl sebacate and 30% of castor oil.

The final mass of the transfer layer consists of 50% of paste F and 50% of solution E after evaporation of the solvent.

The presence of Berlin blue in the transfer layer of this example is for the purpose of providing blue copies instead of black copies.

Example 4

The same procedure is followed as in Example 1, however using a solution G consisting of 6 parts of polychloroprene of molecular weight 150,000, 2 parts of phenylsalicylate and 42 parts of trichloroethylene. The paste used is a paste H consisting of 20% of carbon black, 10% of castor oil, 10% of ricinoleic acid, 15% of calcium sulfate, 15% of tricalcium phosphate and 30% of methyl glycol. The resulting mass of the transfer layer consists of 50% of solution G and 50% of paste H and is obtained by evaporation of the solvent.

Example 5

A dye-containing transfer layer is obtained as in Example 1 with a solution I consisting of 5.5 parts of polycarbonate of molecular weight 70,000, 4.5 parts of 2,4-dibenzoyl resorcinol and 40 parts of methylene chloride. The paste used is paste H of Example 4. The transfer layer is obtained from 50% of solution I and 50% of paste H, is applied to a carrier, dried and fixed.

Example 6

The same procedure is followed as in Example 1 using a solution L consisting of 5 parts of styrene-butadiene mixed polymerisate, 4 parts of salicyclic acid and 41 parts of trichloromethylene and a paste D of Example 2 in a ratio of 50%:50%. The resulting transfer layer is obtained by evaporation of the solvent.

Example 7

The same procedure as in Example 1 is followed using a solution M consisting of 3.5 parts of polyvinyl acetate, 2 parts of benzoic acid and 44.5 parts of trichloromethylene as well as a paste F of Example 3 in a ratio of 50%:50%. The resulting transfer layer is obtained by evaporation of the solvent.

Example 8

The same procedure is followed as in Example 1 utilizing a solution N consisting of 6.5 parts of a mixed polymerisate of polyvinyl acetate and polyvinyl chloride (molecular weight 12,000), 2 parts of phenic acid, and 41.5 parts of methylethyl ketone as well as paste B of Example 1, the ratio being 50%:50%. The resulting transfer layer is obtained by evaporation of the solvent.

Example 9

The same procedure is followed as in Example 1 utilizing a solution O consisting of 4 parts of polyvinyl acetate, 3.5 parts of pyrogallic acid and 42.5 parts of trichloromethylene as well as a paste H of Example 4. The ratio used is 50%:50%. The resulting transfer layer is obtained by evaporation of the solvent.

The take-up layer consists in general of a dispersion or emulsion or solution in the presence of a plasticizer of a resinous substance of the type described above in connection with the take-up layers in water or a solvent such as alcohols, esters, organic chlorine compounds, ketones, or the like, which are evaporated in suitable manner on the carrier to form a very thin, wax-free layer. These take-up layers have a selective affinity to the above described transfer layers when a local pressure is applied.

Example 10

A composition is prepared of:

20% of a 50% acrylic mixed polymerisate emulsion without plasticizer
40% of 94% alcohol
1% of emulsifying agent (sodium lauryl sulfate)
39% water

The solution is obtained by first stirring the water and then the alcohol into the acrylic emulsion.

The take-up layer is obtained by applying the solution to a carrier sheet and then evaporating the same to dryness, for example by passing air thereover.

Example 11

A composition for a take-up layer is prepared of:

7% styrene-butadiene mixed polymerisate
2% tricresyl phosphate
91% trioline

The solution is prepared by dissolving the mixed polymerisate in the solvent under stirring.

Example 12

A composition for a take-up layer is prepared of:

8% polyvinyl acetate
2% dioctyl phthalate
90% of 94% alcohol

The solution is obtained by dissolving the mixed polymerisate in the solvent under stirring.

Example 13

A composition for a take-up layer is prepared of:

8% colophonium
5% titanium dioxide
2% dioctyl sebacate
85% of 94% alcohol

The resulting mixture forms a suspension and is obtained by thorough mixing of the ingredients.

Example 14

A composition for a take-up layer is prepared of:

8% Laropal A (derivative of colophonium, B.A.S.F.)
1% tricresyl phosphate
91% trioline

The solution is obtained by stirring the Laropal A (synthetic Manila copal) into the solvent.

Example 15

A composition for a take-up layer is prepared of:

8% abietomaleic resin
1% tricresyl phosphate
91% trioline

The solution is obtained by stirring the abietomaleic resin into the solvent.

Example 16

A composition for a take-up layer is prepared of:

8% cumarone resin
92% trioline

The solution is obtained by dissolving the cumarone resin in the solvent under stirring.

The take-up layer is prepared, as described above, by applying the composition to a carrier sheet and evaporating the solvent or suspending agent.

According to a preferred embodiment of the present invention, and as illustrated in FIG. 4, the transfer layer and the take-up layer are arranged on the same face of a carrier sheet. This will have the advantage that the sheet carrying transfer and take-up layer on one face can be used like a conventional carbon paper, while at the same time serving as the original by typing onto the free face of the carrier sheet. Furthermore, the take-up layer exposed on the other face of the carrier sheet will not smudge.

Referring now to FIGS. 4*a* and 4*b* of the drawing, the copy sheet **41, 42, 43** comprises a carrier sheet **41**, a transfer layer **42** and a take-up layer **43** arranged in the indicated sequence. A sheet on which copy is to be produced, for instance plain sheet **41'** is interposed between roller **46** of the typewriter and copy sheet **41, 42, 43**. When typewriter key **45** strikes carrier sheet **41**, an image corresponding to the impressed portion of typewriter key **45** will be formed on the free face of carrier sheet **41**. Corresponding portions of transfer layer **42** and take-up layer **43** will be transferred to the adjacent face of plain sheet **41'** and will form thereon an image consisting, as illustrated in FIG. 4*b*, of a portion of transfer layer **42** and of take-up layers **43**, the latter being interposed between plain sheet **41'** and the transferred portion of transfer layer **42**.

It is of course also possible to replace plain sheet **41'** with one or more copy sheets **41, 42, 43** so that the free face of the respective carrier sheet is adjacent to the take-up layer of the superposed copy sheet.

According to a preferred embodiment of the present invention, the transfer layer will consist essentially of a combination or intimate mixture of a synthetic cellulose resin, preferably chosen from the group consisting of methyl cellulose, benzyl cellulose, ethyl cellulose, nitrocellulose, diacetyl cellulose and fatty acid esters of cellulose, in combination with a primary softener adapted to dissolve the respective synthetic cellulose resin, such as diethyl phthalate, dibutyl phthalate, dioctyl phthalate and dioctyl sebacate, and with a secondary softener such as castor oil or ricinoleic acid, plus an organic fixing agent such as tannic or phthalic acid, and an inorganic material of colloidal fineness such as kaolin or calcium sulfate and also of an inorganic or organic dyestuff.

The corresponding take-up layer preferably may consist of a dried solution or suspension of a vinyl polymerizate, a polyolefine, a polydiolefine, a diolefine-styrene mixed polymer, a polycarbonate, colophonium, ethyl cellulose, benzyl cellulose, methyl cellulose, carboxymethyl cellulose, an abietic-maleic resin, a cumarone resin or combinations thereof, and a softener adapted to dissolve these resins and preferably chosen from the group consisting of phthalates, phosphates, sebacates, adipates and chlorinated phenol derivatives, plus at least one white pigment, preferably titanium dioxide, zinc oxide or lithopone.

The take-up layer may also consist of polymerized material having a low melting point such as polyethylene which may have been combined with paraffin, fatty acids, aliphatic alcohols or esters or amides having oily or wax-like characteristics.

Within these groups simple pretesting will show which of the various transfer layers will give best results with one or the other of the take-up layers under any given conditions.

FIG. 5 illustrates the embodiment of the present invention, according to which a protective pigment-containing layer **57** is superposed upon transfer layer **52** carried by carrier sheet **51**.

As mentioned further above, in connection with FIG. 4, the transfer layer and the take-up layer may be sequentially applied to one face of a carrier sheet and a plurality of such composite sheets may then be superposed and copy produced on all of them, for instance by applying the pressure of a typewriter key. The carrier sheet need not be conventional paper but may be any type of suitable sheet material, for instance a synthetic film such as cellophane or other synthetic sheet material.

Of the following examples, Examples 17–25 describing the composition of certain preferred transfer layers according to the present invention, Examples 26–28 describe preferred take-up layers, and Example 29 gives a preferred composition of a protective layer such as layer **57** of FIG. 5, without, however, limiting the invention to the specific details of the examples.

Example 17

A transfer layer is prepared by dissolving 6 parts of ethyl cellulose (44–48% ethoxyl) and 2 parts of a fixing agent such as phthalic acid or tannic acid in 60 parts trichloro ethylene and 32 parts ethanol.

The thus formed solution P is introduced under stirring into a refined paste Z in a ratio of 50% solution P and 50% paste Z.

Paste Z consists of an intimate mixture of 5% carbon black, 15% kaolin, 25% titanium dioxide, 15% methylglycol, 22% castor oil and 18% dibutyl phthalate.

In this manner, a homogeneous copying ink is obtained which is then applied to a carrier sheet, for example of paper, and dried thereon. It fixes itself to the carrier sheet.

It will be noted that the manipulative steps described in Example 1 are followed, however, with the different compositions described herein.

Example 18

The process of Example 17 is followed, however, solution Z consists of 8% nitrocellulose (10.5% N), 2% tannic acid and 90% ethanol of 94% concentration.

Forty-eight percent of solution Q are mixed with 52% of paste Z, the composition of which has been described in Example 17.

Example 19

Fifty percent of solution R consisting of 6% cellulose acetate (53–55% acetic acid), 1% phthalic acid and 93% ethyl-acetate are mixed with 50% of paste Z.

Example 20

Fifty percent of solution S consisting of 5% cellulose propionate, 1% phthalic acid and 94% methylene chloride are mixed with 50% of paste Z.

Example 21

Forty-eight percent of solution T consisting of 5% cellulose butyrate, 1% phthalic acid and 94% methylene chloride are mixed with 52% of paste Z.

Example 22

Forty-eight percent of solution U consisting of 5% cellulose acetoproprionate, 1% phthalic acid and 94% methylene chloride are mixed with 52% of paste Z.

Example 23

Fifty percent of solution V consisting of 6% acetobutyrate (6 acetyl, 48 butyryl), 1% phthalic acid and 94% methylene chloride are mixed with 50% of paste Z.

Example 24

Fifty-two percent of solution W consisting of 7% benzyl cellulose, 1% phthalic acid and 92% methylene chloride are mixed with 48% of paste Z.

Example 25

Fifty percent of solution X consisting of 5% methyl cellulose, 1% tannic acid, 10% water and 84% ethanol are mixed with 50% of paste Z.

Example 26

A composition for a take-up layer is prepared by melting together 40% of low-melting-point polyethylene, 56% microcrystalline paraffin and 4% zinc oxide.

Example 27

A composition for a take-up layer is prepared by melting together 70% polyethylene, 20% stearic acid and 10% paraffin.

Example 28

A composition which upon evaporation of its volatile constituents will form a take-up layer, is prepared of 40% of an aqueous emulsion of acrylic resin (50% dry substance) 45% ethanol, 10% water and 5% titanium dioxide.

Example 29

A protective layer, such as layer 57 of FIG. 5, may consist of an intimate mixture of 1 part by weight of a solution of 9% of a vinyl polymerizate such as is commercially available on the trade name Mowilit K50, Hoechst, and 1% tannic acid in 90% ethanol (94%), with 1 part by weight of a paste consisting of 35% titanium dioxide, 20% methylene glycol, 25% castor oil and 20% dioctyl phthalate.

Without further analysis, the foregoing will so fully reveal the gist of the present invention that others can, by applying current knowledge, readily adapt it for various applications without omitting features that, from the standpoint of prior art, fairly constitute essential characteristics of the generic or specific aspects of this invention and, therefore, such adaptations should and are intended to be comprehended within the meaning and range of equivalence of the following claims.

What is claimed as new and desired to be secured by Letters Patent is:

1. A copy paper or the like, comprising a carrier sheet provided on one face thereof with a transfer layer consisting essentially of a resinous substance selected from the group consisting of polyvinyl acetate, mixed polymerisates of polyvinyl acetate, colophonium, polymethylacrylate, polymethylmethacrylate, polycarbonates, polystyrene, polychloroprene, styrene-butadiene copolymers, synthetic cellulose resins, cumarone resin and cumarone-phenol resins, of an effective amount of at least one plasticizer for said resinous substance, of at least one organic fixing agent in an amount of between about 15–90% of the weight of said resinous substance and selected from the group consisting of tannic acid, phthalic acid, gallic acid, digallic acid, salicylic acid, phenyl salicylate, 4-butyl-phenyl-salicylate, 5-chloro-2-hydroxy-benzophenone, 2,4-dibenzoyl-resorcin, phenol and pyrogallic acid, of at least one inorganic colloidal substance in an amount of 1.15–1.70 times the weight of said resinous substance plus said plasticizer and selected from the group consisting of bentonite, kaolin, calcium carbonate, calcium sulfate, calcium phosphate and zinc oxide, and of a pigment, whereby upon the making of an impression on the opposite face of said carrier sheet when said one face thereof is in contact with a face of a take-up sheet sensitive to and adapted to receive said transfer layer a portion of the transfer layer corresponding to said impression is transferred to and adheres to said take-up sheet, thereby making a copy of said impression thereon.

2. A copy paper or the like, comprising a carrier sheet provided on one face thereof with a transfer layer consisting essentially of a resinous substance selected from the group consisting of polyvinyl acetate, mixed polymerisates of polyvinyl acetate, colophonium, polymethylacrylate, polymethylmethacrylate, polycarbonates, polystyrene, polychloroprene, styrene-butadiene copolymers, synthetic cellulose resins, cumarone resin and cumarone-phenol resins, of an effective amount of at least one plasticizer for said resinous substance, of at least one organic fixing agent in an amount of between about 15–90% of the weight of said resinous substance and selected from the group consisting of tannic acid, phthalic acid, gallic acid, digallic acid, salicylic acid, phenyl salicylate, 4-butyl-phenyl-salicylate, 5-chloro-2-hydroxy-benzophenone, 2,4-dibenzoyl-resorcin, phenol and pyrogallic acid, of at least one inorganic colloidal substance in an amount of 1.15–1.70 times the weight of said resinous substance plus said plasticizer and selected from the group consisting of bentonite, kaolin, calcium carbonate, calcium sulfate, calcium phosphate and zinc oxide, and of a pigment, and provided on the other face thereof with a take-up layer sensitive to and adapted to receive impressions of said transfer layer, said take-up layer consisting essentially of a dried resinous substance selected from the group consisting of vinyl polymers, ethyl cellulose, benzyl cellulose, methyl cellulose, carboxymethyl cellulose, polydiolefines, diolefine-styrene mixed polymers, polycarbonates, colophonium, copal, abietic-maleic resins and cumarone resins, and of an effective amount of at least one plasticizer in which said resinous substance is soluble, whereby said take-up layer of the type described is adapted to transfer impressions thereto.

3. A sheet assembly composed of two sheets one of which is provided on one face with a transfer layer which is adapted to be placed in face to face contact with the other sheet which is provided with a take-up layer, said transfer layer consisting essentially of a resinous substance selected from the group consisting of polyvinyl acetate, mixed polymerisates of polyvinyl acetate, colophonium, polymethylacrylate, polymethylmethacrylate, polycarbonates, polystyrene, polychloroprene, styrene-butadiene copolymers, synthetic cellulose resins, cumarone resin and cumarone-phenol resins, of an effective amount of at least one plasticizer for said resinous substances, of at least one organic fixing agent in an amount of between about 15–90% of the weight of said resinous substance and selected from the group consisting of tannic acid, phthalic acid, gallic acid, digallic acid, salicylic acid, phenyl salicylate, 4-butyl-phenyl-salicylate, 5-chloro-2 - hydroxy - benzophenone, 2,4-dibenzoyl-resorcin, phenol and pyrogallic acid, of at least one inorganic colloidal substance in an amount of 1.15–1.70 times the weight of said resinous substance plus said plasticizer and selected from the group consisting of bentonite, kaolin, calcium carbonate, calcium sulfate, calcium phosphate and zinc oxide, and of a pigment, and said take-up layer consisting essentially of a dried resinous substance selected from the group consisting of vinyl polymers, ethyl cellulose, benzyl cellulose, methyl cellulose, carboxymethyl cellulose, polydiolefines, diolefine-styrene mixed polymers, polycarbonates, colophonium, copal, abietic-maleic resins and cumarone resins, and of an effective amount of at least one plasticizer in which said resinous substance is soluble.

4. A copy paper or the like, comprising a carrier sheet provided on one face thereof with a transfer layer consisting essentially of a resinous substance selected from the group consisting of polyvinyl acetate, mixed polymerisates of polyvinyl acetate, colophonium, polymethylacrylate, polymethylmethacrylate, polycarbonates, polystyrene, polychloroprene, styrene-butadiene copolymers, synthetic cellulose resins, cumarone resin and cumarone-phenol resins in an amount of about 4–20% by weight of said transfer layer, of an effective amount of at least one plasticizer for said resinous substance, of at least one organic fixing agent in an amount of between about 15–90% of the weight of said resinous substance and selected from the group consisting of tannic acid, phthalic acid, gallic acid, digallic acid, salicylic acid, phenyl salicylate, 4-butyl-phenyl-salicylate, 5-chloro-2 - hydroxy - benzophenone, 2,4-dibenzoyl-resorcin, phenol and pyrogallic acid, of at least one inorganic colloidal substance in an amount of 1.15–1.70 times the weight of said resinous substance plus said plasticizer and selected from the group consisting of bentonite, kaolin, calcium carbonate, calcium sulfate, calcium phosphate and zinc oxide, and of a pigment, and

provided on the other face thereof with a take-up layer sensitive to and adapted to receive impressions of a transfer layer, said take-up layer consisting essentially of a dried resinous substance selected from the group consisting of vinyl polymers, ethyl cellulose, benzyl cellulose, methyl cellulose, carboxymethyl cellulose, polydiolefines, diolefine-styrene mixed polymers, polycarbonates, colophonium, copal, abietic-maleic resins and cumarone resins, and of an effective amount of at least one plasticizer in which said resinous substance is soluble, whereby said take-up layer is adapted to receive impressions transferred thereto from a transfer layer of the type described, and whereby said transfer layer when in contact with a take-up layer of the type described is adapted to transfer impressions thereto.

5. A sheet assembly composed of two sheets one of which is provided on one face with a transfer layer which is adapted to be placed in face to face contact with the other sheet which is provided with a take-up layer, said transfer layer consisting essentially of a resinous substance selected from the group consisting of polyvinyl acetate, mixed polymerisates of polyvinyl acetate, colophonium, polymethylacrylate, polymethylmethacrylate, polycarbonates, polystyrene, polychloroprene, styrene-butadiene copolymers, synthetic cellulose resins, cumarone resin and cumarone-phenol resins in an amount of about 4—20% by weight of said transfer layer, of an effective amount of at least one plasticizer for said resinous substance, of at least one organic fixing agent in an amount of between about 15–90% of the weight of said resinous substance and selected from the group consisting of tannic acid, phthalic acid, gallic acid, digallic acid, salicylic acid, phenyl salicylate, 4-butyl-phenyl-salicylate, 5-chloro-2-hydroxy-benzophenone, 2,4-dibenzoyl-resorcin, phenol and pyrogallic acid, of at least one inorganic colloidal substance in an amount of 1.15–1.70 times the weight of said resinous substance plus said plasticizer and selected from the group consisting of bentonite, kaolin, calcium carbonate, calcium sulfate, calcium phosphate and zinc oxide, and of a pigment, and said take-up layer consisting essentially of a dried resinous substance selected from the group consisting of vinyl polymers, ethyl cellulose, benzyl cellulose, methyl cellulose, carboxymethyl cellulose, polydiolefines, diolefine-styrene mixed polyers, polycarbonates, colophonium, copal, abietic-maleic resins and cumarone resins, and of an effective amount of at least one plasticizer in which said resinous substance is soluble.

6. A copy paper or the like, comprising a carrier sheet provided on one face thereof with a transfer layer consisting essentially of a resinous substance selected from the group consisting of polyvinyl acetate, mixed polymerisates of polyvinyl acetate, colophonium, polymethylacrylate, polymethylmethacrylate, polycarbonates, polystyrene, polychloroprene, styrene-butadiene copolymers, synthetic cellulose resins, cumarone resin and cumarone-phenol resins in an amount of about 4–20% by weight of said transfer layer, of an effective amount of at least one plasticizer for said resinous substance in an amount of 1–4.5 times the amount of said resinous substance, of at least one organic fixing agent in an amount of between about 15–90% of the weight of said resinous substance and selected from the group consisting of tannic acid, phthalic acid, gallic acid, digallic acid, salicylic acid, phenyl salicylate, 4-butyl-phenyl-salicylate, 5-chloro-2-hydroxy - benzophenone, 2,4 - dibenzoyl - resorcin, phenol and pyrogallic acid, of at least one inorganic colloidal substance in an amount of 1.15–1.70 times the weight of said resinous substance plus said plasticizer and selected from the group consisting of bentonite, kaolin, calcium carbonate, calcium sulfate, calcium phosphate and zinc oxide, and of a pigment, whereby upon the making of an impression on the opposite face of said carrier sheet when said one face thereof is in contact with a face of a take-up sheet sensitive to and adapted to receive said transfer layer a portion of the transfer layer corresponding to said impression is transferred to and adheres to said take-up sheet, thereby making a copy of said impression thereon.

7. In a sheet assembly composed of two sheets one of which is provided on one face with a transfer layer which is adapted to be placed in face to face contact with the other sheet which is provided with a take-up layer, said transfer layer consisting essentially of a resinous substance selected from the group consisting of polyvinyl acetate, mixed polymerisates of polyvinyl acetate, colophonium, polymethylacrylate, polymethylmethacrylate, polycarbonates, polystyrene, polychloroprene, styrene-butadiene copolymers, synthetic cellulose resins, cumarone resin and cumarone-phenol resins in an amount of about 4–20% by weight of said transfer layer, of an effective amount of at least one plasticizer for said resinous substance in an amount of 1–4.5 times the amount of said resinous substance, of at least one organic fixing agent in an amount of between about 15–90% of the weight of said resinous substance and selected from the group consisting of tannic acid, phthalic acid, gallic acid, digallic acid, salicylic acid, phenyl salicylate, 4 - butyl - phenyl - salicylate, 5 - chloro - 2 - hydroxy - benzophenone, 2,4-dibenzoyl-resorcin, phenol and pyrogallic acid, of at least one inorganic colloidal substance in an amount of 1.15–1.70 times the weight of said resinous substance plus said plasticizer and selected from the group consisting of bentonite, kaolin, calcium carbonate, calcium sulfate, calcium phosphate and zinc oxide, and of a pigment, and said take-up layer consisting essentially of a dried resinous substance selected from the group consisting of vinyl polymers, ethyl cellulose, benzyl cellulose, methyl cellulose, carboxymethyl cellulose, polydiolefines, diolefine-styrene mixed polymers, polycarbonates, colophonium, copal, abietic-maleic resins and cumarone resins, and of an effective amount of at least one plasticizer in which said resinous substance is soluble.

8. A copy paper or the like, comprising a carrier sheet provided on one face thereof with a transfer layer consisting essentially of a resinous substance selected from the group consisting of polyvinyl acetate, mixed polymerisates of polyvinyl acetate, colophonium, polymethylacrylate, polymethylmethacrylate, polycarbonates, polystyrene, polychloroprene, styrene-butadiene copolymers, synthetic cellulose resins, cumarone resin and cumarone-phenol resins in an amount of about 4–20% by weight of said transfer layer, of an effective amount of at least one plasticizer for said resinous substance in an amount of 1–4.5 times the amount of said resinous substance, of at least one organic fixing agent in an amount of between about 15–90% of the weight of said resinous substance and selected from the group consisting of tannic acid, phthalic acid, gallic acid, digallic acid, salicylic acid, phenyl salicylate, 4-butyl-phenyl-salicylate, 5-chloro-2-hydroxy-benzophenone, 2,4-dibenzoyl-resorcin, phenol and pyrogallic acid in an amount of 15–90% by weight of the weight of said resinous substance, of at least one inorganic colloidal substance in an amount of 1.15–1.70 times the weight of said resinous substance plus said plasticizer and selected from the group consisting of bentonite, kaolin, calcium carbonate, calcium sulfate, calcium phosphate and zinc oxide, and of a pigment, whereby upon the making of an impression on the opposite face of said carrier sheet when said one face thereof is in contact with a face of a take-up sheet sensitive to and adapted to receive said transfer layer a portion of the transfer layer corresponding to said impression is transferred to and adheres to said take-up sheet, thereby making a copy of said impression thereon.

9. A copy paper or the like, comprising a carrier sheet provided on one face thereof with a transfer layer consisting essentially of a resinous substance selected from the group consisting of polyvinyl acetate, mixed polymerisates of polyvinyl acetate, colophonium, poly-

methylacrylate, polymethylmethacrylate, polycarbonates, polystyrene, polychloroprene, styrene-butadiene copolymers, synthetic cellulose resins, cumarone resin and cumarone-phenol resins in an amount of about 4–20% by weight of said transfer layer, of an effective amount of at least one plasticizer for said resinous substance in an amount of 1–4.5 times the amount of said resinous substance, of at least one organic fixing agent in an amount of between about 15–90% of the weight of said resinous substance and selected from the group consisting of tannic acid, gallic acid, phthalic acid, digallic acid, salicylic acid, phenyl salicylate, 4-butyl-phenyl-salicylate, 5-chloro-2-hydroxy-benzophenone, 2,4-dibenzoyl-resorcin, phenol and pyrogallic acid in an amount of 15–90% by weight of the weight of said resinous substance, of at least one inorganic colloidal substance in an amount of 1.15–1.70 times the weight of said resinous substance plus said plasticizer and selected from the group consisting of bentonite, kaolin, calcium carbonate, calcium sulfate, calcium phosphate and zinc oxide, and of a pigment, and provided on the other face thereof with a take-up layer sensitive to and adapted to receive impressions of a transfer layer, said take-up layer consisting essentially of a dried resinous substance selected from the group consisting of vinyl polymers, ethyl cellulose, benzyl cellulose, methyl cellulose, carboxymethyl cellulose, polydiolefines, diolefine-styrene mixed polymers, polycarbonates, colophonium, copal, abietic-maleic resins and cumarone resins, and of an effective amount of at least one plasticizer in which said resinous substance is soluble, whereby said take-up layer is adapted to receive impressions transferred thereto from a transfer layer of the type described, and whereby said transfer layer when in contact with a take-up layer of the type described is adapted to transfer impressions thereto.

10. In a sheet assembly composed of two sheets one of which is provided on one face with a transfer layer which is adapted to be placed in face to face contact with the other sheet which is provided with a take-up layer, said transfer layer consisting essentially of a resinous substance selected from the group consisting of polyvinyl acetate, mixed polymerisates of polyvinyl acetate, colophonium, polymethylacrylate, polymethylmethacrylate, polycarbonates, polystyrene, polychloroprene, styrene-butadiene copolymers, synthetic cellulose resins, cumarone resin and cumarone-phenol resins in an amount of about 4–20% by weight of said transfer layer, of at least one plasticizer for said resinous substance in an amount of 1–4.5 times the amount of said resinous substance, of at least one organic fixing agent selected from the group consisting of tannic acid, phthalic acid, gallic acid, digallic acid, salicylic acid, phenyl salicylate, 4-butyl-phenyl-salicylate, 5-chloro-2-hydroxy-benzophenone, 2,4-dibenzoyl-resorcin, phenol and pyrogallic acid in an amount of 15–90% by weight of the weight of said resinous substance, of at least one inorganic colloidal substance selected from the group consisting of bentonite, kaolin, calcium carbonate, calcium sulfate, calcium phosphate and zinc oxide, and of pigment, and said take-up layer consisting essentially of a dried resinous substance selected from the group consisting of vinyl polymers, ethyl cellulose, benzyl cellulose, methyl cellulose, carboxymethyl cellulose, polydiolefines, diolefine-styrene mixed polymers, polycarbonates, colophonium, copal, abietic-maleic resins and cumarone resins, and of at least one plasticizer in which said resinous substance is soluble.

11. A copy paper or the like, comprising a carrier sheet provided on one face thereof with a transfer layer consisting essentially of a resinous substance selected from the group consisting of polyvinyl acetate, mixed polymerisates of polyvinyl acetate, colophonium, polymethylacrylate, polymethylmethacrylate, polycarbonates, polystyrene, polychloroprene, styrene-butadiene copolymers, synthetic cellulose resins, cumarone resin and cumarone-phenol resins in an amount of about 4–20% by weight of said transfer layer, of at least one plasticizer for said resinous substance in an amount of 1–4.5 times the amount of said resinous substance, of at least one organic fixing agents selected from the group consisting of tannic acid, phthalic acid, gallic acid, digallic acid, salicylic acid, phenyl salicylate, 4-butyl-phenyl-salicylate, 5-chloro-2-hydroxy-benzophenone, 2,4-dibenzoyl-resorcin, phenol and pyrogallic acid in an amount of 15–90% by weight of the weight of said resinous substance, of at least one inorganic colloidal substance selected from the group consisting of bentonite, kaolin, calcium carbonate, calcium sulfate, calcium phosphate and zinc oxide in an amount of 1.15–1.70 times the weight of said resinous substance plus said plasticizer, and of a pigment, whereby upon the making of an impression on the opposite face of said carrier sheet when said one face thereof is in contact with a face of a take-up sheet sensitive to and adapted to receive said transfer layer a portion of the transfer layer corresponding to said impression is transferred to and adheres to said take-up sheet, thereby making a copy of said impression thereon.

12. A copy paper or the like, comprising a carrier sheet provided on one face thereof with a transfer layer consisting essentially of a resinous substance selected from the group consisting of polyvinyl acetate, mixed polymerisates of polyvinyl acetate, colophonium, polymethylacrylate, polymethylmethacrylate, polycarbonates, polystyrene, polychloroprene, styrene-butadiene copolymers, synthetic cellulose resins, cumarone resin and cumarone-phenol resins in an amount of about 4–20% by weight of said transfer layer, of at least one plasticizer for said resinous substance in an amount of 1–4.5 times the amount of said resinous substance, of at least one organic fixing agent selected from the group consisting of tannic acid, phthalic acid, gallic acid, digallic acid, salicylic acid, phenyl salicylate, 4-butyl-phenyl-salicylate, 5-chloro-2-hydroxy-benzophenone, 2,4-dibenzoyl-resorcin, phenol and pyrogallic acid in an amount of 15–90% by weight of the weight of said resinous substance, of at least one inorganic colloidal substance selected from the group consisting of bentonite, kaolin, calcium carbonate, calcium sulfate, calcium phosphate and zinc oxide in an amount of 1.15–1.70 times the weight of said resinous substance plus said plasticizer, and of a pigment, and provided on the other face thereof with a take-up layer sensitive to and adapted to receive impressions of a transfer layer, said take-up layer consisting essentially of a dried resinous substance selected from the group consisting of vinyl polymers, ethyl cellulose, benzyl cellulose, methyl cellulose, carboxymethyl cellulose, polydiolefines, diolefine-styrene mixed polymers, polycarbonates, colophonium, copal, abietic-maleic resins and cumarone resins, and of at least one plasticizer in which said resinous substance is soluble, whereby said take-up layer is adapted to receive impressions transferred thereto from a tranfer layer of the type described, and whereby said transfer layer when in contact with a take-up layer of the type described is adapted to transfer impressions thereto.

13. In a sheet assembly composed of two sheets one of which is provided on one face with a transfer layer which is adapted to be placed in face to face contact with the other sheet which is provided with a take-up layer, said transfer layer consisting essentially of a resinous substance selected from the group consisting of polyvinyl acetate, mixed polymerisates of polyvinyl acetate, colophonium, polymethylacrylate, polymethylmethacrylate, polycarbonates, polstyrene, polychloroprene, styrene-butadiene copolymers, synthetic cellulose resins, cumarone resin and cumarone-phenol resins in an amount of about 4–20% by weight of said transfer layer, of at least one plasticizer for said resinous substance in an amount of 1–4.5 times the amount of said resinous substance, of at least one organic fixing agent selected from the group consisting of tannic acid, phthalic acid, gallic acid, digallic acid, salicylic acid, phenyl salicylate, 4-butyl-phenyl-salicylate, 5-chloro-2-hydroxy-benzophenone, 2,4-dibenzoylresorcin, phenol and

pyrogallic acid in an amount of 15–90% by weight of the weight of said resinous substance, of at least one inorganic colloidal substance selected from the group consisting of bentonite, kaolin, calcium carbonate, calcium sulfate, calcium phosphate and zinc oxide in an amount of 1.15–1.70 times the weight of said resinous substance plus said plasticizer, and of a pigment, and said take-up layer consisting essentially of a dried resinous substance selected from the group consisting of vinyl polymers, ethyl cellulose, benzyl cellulose, methyl cellulose, carboxymethyl cellulose, polydiolefines, diolefine-styrene mixed polymers, polycarbonates, colophonium, copal, abietic-maleic resins and cumarone resins, and of at least one plasticizer in which said resinous substance is soluble.

14. A copy paper or the like, comprising a carrier sheet provided on one face thereof with a transfer layer consisting essentially of a resinous substance selected from the group consisting of polyvinyl acetate, mixed polymerisates of polyvinyl acetate, colophonium, polymethylacrylate, polymethylmethacrylate, polycarbonates, polystyrene, polychloroprene, styrene-butadiene copolymers, synthetic cellulose resins, cumarone resin and cumarone-phenol resins in an amount of about 4–20% by weight of said transfer layer, of at least one plasticizer for said resinous substance in an amount of 1–4.5 times the amount of said resinous substance, of at least one organic fixing agent selected from the group consisting of tannic acid, phthalic acid, gallic acid, digallic acid, salicylic acid, phenyl salicylate, 4-butyl-phenyl-salicylate, 5-chloro-2-hydroxy-benzophenone, 2,4-dibenzoyl-resorcin, phenol and pyrogallic acid in an amount of 15–90% by weight of the weight of said resinous substance, of at least one inorganic colloidal substance selected from the group consisting of bentonite, kaolin, calcium carbonate, calcium sulfate, calcium phosphate and zinc oxide in an amount of 1.15–1.70 times the weight of said resinous substance plus said plasticizer, and carbon black in an amount of 2.5–20% by weight of the weight of said transfer layer whereby upon the making of an impression on the opposite face of said carrier sheet when said one face thereof is in contact with a face of a take-up sheet sensitive to and adapted to receive said transfer layer a portion of the transfer layer corresponding to said impression is transferred to and adheres to said take-up sheet, thereby making a copy of said impression thereon.

15. A copy paper or the like, comprising a carrier sheet having a thickness of 0.04–0.08 mm. and provided on one face thereof with a transfer layer having a thickness of 0.005–0.015 mm. and consisting essentially of a resinous substance selected from the group consisting of polyvinyl acetate, mixed polymerisates of polyvinyl acetate, colophonium, polymethylacrylate, polymethylmethacrylate, polycarbonates, polystyrene, polychloroprene, styrene-butadiene copolymers, synthetic cellulose resins, cumarone resin and cumarone-phenol resins, of an effective amount of at least one plasticizer for said resinous substance, of at least one organic fixing agent in an amount of between about 15–90% of the weight of said resinous substance and selected from the group consisting of tannic acid, phthalic acid, gallic acid, digallic acid, salicylic acid, phenyl salicylate, 4-butyl-phenyl-salicylate, 5-chloro-2-hydroxy-benzophenone, 2,4-dibenzoyl-resorcin, phenol and pyrogallic acid, of at least one inorganic colloidal substance in an amount of 1.15–1.70 times the weight of said resinous substance plus said plasticizer and selected from the group consisting of bentonite, kaolin, calcium carbonate, calcium sulfate, calcium phosphate and zinc oxide, and of a pigment, whereby upon the making of an impression on the opposite face of said carrier sheet when said one face thereof is in contact with a face of a take-up sheet sensitive to and adapted to receive said transfer layer a portion of the transfer layer corresponding to said impression is transferred to and adheres to said take-up sheet, thereby making a copy of said impression thereon.

16. In a sheet assembly composed of two sheets one of which is provided on one face with a transfer layer which is adapted to be placed in face to face contact with the other sheet which is provided with a take-up layer, said transfer layer consisting essentially of a resinous substance selected from the group consisting of polyvinyl acetate, mixed polymerisates of polyvinyl acetate, colophonium, polymethylacrylate, polymethylmethacrylate, polycarbonates, polystyrene, polychloroprene, styrene-butadiene copolymers, synthetic cellulose resins, cumarone resin and cumarone-phenol resins in an amount of about 4–20% by weight of said transfer layer, of at least one plasticizer for said resinous substance, of at least one organic fixing agent selected from the group consisting of tannic acid, phthalic acid, gallic acid, digallic acid, salicyclic acid, phenyl salicylate, 4-butyl-phenyl-salicylate, 5-chloro-2-hydroxy-benzophenone, 2,4-dibenzoyl-resorcin, phenol and pyrogallic acid, of at least one inorganic colloidal substance selected from the group consisting of bentonite, kaolin, calcium carbonate, calcium sulfate, calcium phosphate and zinc oxide, and of a pigment, and said take-up layer consisting essentially of a dried resinous substance selected from the group consisting of vinyl polymers, ethyl cellulose, benzyl cellulose, methyl cellulose, carboxymethyl cellulose, polydiolefines, diolefine-styrene mixed polymers, polycarbonates, colophonium, copal, abietic-maleic resins and cumarone resins, and of at least one plasticizer in which said resinous substance is soluble in an amount of about 10%–50% by weight of said resinous substance.

17. A copy paper or the like, comprising a carrier sheet provided on one face thereof with a transfer layer consisting essentially of methyl cellulose, of an effective amount of at least one primary plasticizer for said methyl cellulose, selected from the group consisting of diethyl phthalate, dibutyl phthalate, dioctyl phthalate and dioctyl sebacate, of an effective amount of at least one secondary plasticizer selected from the group consisting of castor oil and ricinoleic acid, of at least one organic fixing agent in an amount of between about 15–90% of the weight of said methyl cellulose, of at least one inorganic colloidal substance in an amount of between about 1.15–1.70 times the weight of said methyl cellulose plus said plasticizer and selected from the group consisting of bentonite, kaolin, calcium carbonate, calcium sulfate, calcium phosphate and zinc oxide, and of a dyestuff, whereby upon the making of an impression on the opposite face of said carrier sheet when said one face thereof is in contact with a face of a take-up sheet sensitive to and adapted to receive said transfer layer, a portion of the transfer layer corresponding to said impression is transferred to and adheres to said take-up sheet, thereby making a copy of said impression thereon.

18. A copy paper or the like, comprising a carrier sheet provided on one face thereof with a transfer layer consisting essentially of benzyl cellulose, of an effective amount of at least one primary plasticizer for said benzyl cellulose, selected from the group consisting of diethyl phthalate, dibutyl phthalate, dioctyl phthalate and dioctyl sebacate, of an effective amount of at least one secondary plasticizer selected from the group consisting of castor oil and ricinoleic acid, of at least one organic fixing agent in an amount of between about 15–90% of the weight of said benzyl cellulose, of at least one inorganic colloidal substance in an amount of between about 1.15–1.70 times the weight of said benzyl cellulose plus said plasticizer and selected from the group consisting of bentonite, kaolin, calcium carbonate, calcium sulfate, calcium phosphate and zinc oxide, and of a dyestuff, whereby upon the making of an impression on the opposite face of said carrier sheet when said one face thereof is in contact with a face of a take-up sheet sensitive to and adapted to receive said transfer layer, a portion of the transfer layer corresponding to said impression is trans-

ferred to and adheres to said take-up sheet, thereby making a copy of said impression thereon.

19. A copy paper or the like, comprising a carrier sheet provided on one face thereof with a transfer layer consisting essentially of ethyl cellulose, of an effective amount of at least one primary plasticizer for said ethyl cellulose, selected from the group consisting of diethyl phthalate, dibutyl phthalate, dioctyl phthalate and dioctyl sebacate, of an effective amount of at least one secondary plasticizer selected from the group consisting of castor oil and ricinoleic acid, of at least one organic fixing agent in an amount of between about 15–90% of the weight of said ethyl cellulose, of at least one inorganic colloidal substance in an amount of between about 1.15–1.70 times the weight of said ethyl cellulose plus said plasticizers and selected from the group consisting of bentonite, kaolin, calcium carbonate, calcium sulfate, calcium phosphate and zinc oxide, and of a dyestuff, whereby upon the making of an impression on the opposite face of said carrier sheet when said one face thereof is in contact with a face of a take-up sheet sensitive to and adapted to receive said transfer layer, a portion of the transfer layer corresponding to said impression is transferred to and adheres to said take-up sheet, thereby making copy of said impression thereon.

20. A copy paper or the like, comprising a carrier sheet provided on one face thereof with a transfer layer consisting essentially of nitrocellulose, of an effective amount of at least one primary plasticizer for said nitrocellulose, selected from the group consisting of diethyl phthalate, dibutyl phthalate, dioctyl phthalate and dioctyl sebacate, of an effective amount of at least one secondary plasticizer selected from the group consisting of castor oil and ricinoleic acid, of at least one organic fixing agent in an amount of between about 15–90% of the weight of said nitrocellulose, of at least one inorganic colloidal substance in an amount of between about 1.15–1.70 times the weight of said nitrocellulose plus said plasticizers and selected from the group consisting of bentonite, kaolin, calcium carbonate, calcium sulfate, calcium phosphate and zinc oxide, and of a dyestuff, whereby upon the making of an impression on the opposite face of said carrier sheet when said one face thereof is in contact with a face of a take-up sheet sensitive to and adapted to receive said transfer layer, a portion of the transfer layer corresponding to said impression is transferred to and adheres to said take-up sheet, thereby making a copy of said impression thereon.

21. A copy paper or the like, comprising a carrier sheet provided on one face thereof with a transfer layer consisting essentially of diacetyl cellulose, of an effective amount of at least one primary plasticizer for said diacetyl cellulose, selected from the group consisting of diethyl phthalate, dibutyl phthalate, dioctyl phthalate and dioctyl sebacate, of an effective amount of at least one secondary plasticizer selected from the group consisting of castor oil and ricinoleic acid, of at least one organic fixing agent in an amount of between about 15–90% of the weight of said diacetyl cellulose of at least one inorganic colloidal substance in an amount of between about 1.15–1.70 times the weight of said diacetyl cellulose plus said plasticizers and selected from the group consisting of bentonite, kaolin, calcium carbonate, calcium sulfate, calcium phosphate and zinc oxide, and of a dyestuff, whereby upon the making of an impression on the opposite face of said carrier sheet when said one face thereof is in contact with a face of a take-up sheet sensitive to and adapted to receive said transfer layer, a portion of the transfer layer corresponding to said impression is transferred to and adheres to said take-up sheet, thereby making a copy of said impression thereon.

22. A copy paper or the like, comprising a carrier sheet provided on one face thereof with a transfer layer consisting essentially of at least one fatty acid ester of cellulose, of an effective amount of at least one primary plasticizer for said one fatty acid ester of cellulose, selected from the group consisting of diethyl phthalate, dibutyl phthalate, dioctyl phthalate and dioctyl sebacate, of an effective amount of at least one secondary plasticizer selected from the group consisting of castor oil and ricinoleic acid, of at least one organic fixing agent in an amount of between about 15–90% of the weight of said fatty acid ester of cellulose, of at least one inorganic colloidal substance in an amount of between about 1.15–1.70 times the weight of said fatty acid ester of cellulose plus said plasticizers and selected from the group consisting of betonite, kaolin, calcium carbonate, calcium sulfate, calcium phosphate and zinc oxide, and of a dyestuff, whereby upon the making of an impression on the opposite face of said carrier sheet when said one face thereof is in contact with a face of a take-up sheet sensitive to and adapted to receive said transfer layer, a portion of the transfer layer corresponding to said impression is transferred to and adheres to said take-up sheet, thereby making a copy of said impression thereon.

23. A copy paper or the like, comprising a carrier sheet provided on one face thereof with a transfer layer consisting essentially of methyl cellulose, of an effective amount of at least one primary plasticizer for said methyl cellulose, selected from the group consisting of diethyl phthalate, dibutyl phthalate, dioctyl phthalate and dioctyl sebacate, of an effective amount of at least one secondary plasticizer selected from the group consisting of castor oil and ricinoleic acid, of at least one organic fixing agent in an amount of between about 15–90% of the weight of said methyl cellulose, of at least one inorganic colloidal substance in an amount of between about 1.15–1.70 times the weight of said methyl cellulose plus said plasticizers and selected from the group consisting of bentonite, kaolin, calcium carbonate, calcium sulfate, calcium phosphate and zinc oxide, and of a dyestuff; and a protective, pigment-containing layer covering said transfer layer, whereby upon the making of an impression on the opposite face of said carrier sheet when said one face thereof is in contact with a face of a take-up sheet sensitive to and adapted to receive said transfer layer, a portion of the transfer layer corresponding to said impression is transferred to and adheres to said take-up sheet, thereby making a copy of said impression thereon.

24. A copy paper or the like, comprising a carrier sheet provided with a transfer layer consisting essentially of a resinous substance selected from the group consisting of polyvinyl acetate, mixed polymerisates of polyvinyl acetate, mixed polymerisates of polyvinyl acetate, colophonium, polymethylacrylate, polymethylmethacrylate, polycarbonates, polystyrene, polychloroprene, styrene-butadiene copolymers, synthetic cellulose resins, cumarone resin and cumarone-phenol resins, of an effective amount of at least one plasticizer for said resinous substance, of at least one organic fixing agent in an amount of between about 15–90% of the weight of said resinous substance and selected from the group consisting of tannic acid, phthalic acid, gallic acid, digallic acid, salicylic acid, phenyl salicylate, 4-butyl-phenyl-salicylate, 5-chloro - 2 - hydroxy - benzophenone, 2,4 - dibenzoyl - resorcin, phenol and pyrogallic acid, of at least one inorganic colloidal substance in an amount of 1.15–1.70 times the weight of said resinous substance plus said plasticizer and selected from the group consisting of bentonite, kaolin, calcium carbonate, calcium sulphate, calcium phosphate and zinc oxide, and of a pigment, and also provided with a take-up layer sensitive to and adapted to receive impressions of said transfer layer, said take-up layer consisting essentially of a dried resinous substance selected from the group consisting of vinyl polymers, ethyl cellulose, benzyl cellulose, methyl cellulose, carboxymethyl cellulose, polydiolefines, diolefine-

styrene mixed polymers, polycarbonates, colophonium, copal, abietic-maleic resins and cumarone resins, and of an effective amount of at least one plasticizer in which said resinous substance is soluble, whereby said take-up layer is adapted to receive impressions transferred thereto from a transfer layer of the type described, and whereby said transfer layer when in contact with a take-up layer of the type described is adapted to transfer impressions thereto.

25. A copy paper or the like, comprising, in combination, a carrier sheet provided on one face thereof with a transfer layer consisting essentially of a resinous substance selected from the group consisting of polyvinyl acetate, mixed polymerisates of polyvinyl acetate, colophonium, polymethylacrylate, polymethylmethacrylate, polycarbonates, polystyrene, polychloroprene, styrene-butadiene copolymers, synthetic cellulose resins, cumarone resin and cumarone-phenol resins, of an effective amount of at least one plasticizer for said resinous substance, of at least one organic fixing agent in an amount of between about 15–90% of the weight of said resinous substance and selected from the group consisting of tannic acid, phthalic acid, gallic acid, digallic acid, salicylic acid, phenyl salicylate, 4-butyl-phenyl-salicylate, 5 - chloro - 2 - hydroxy - benzophenone, 2,4 - dibenzoyl-resorcin, phenol and pyrogallic acid, of at least one inorganic colloidal substance in an amount of 1.15–1.70 times the weight of said resinous substance plus said plasticizer and selected from the group consisting of bentonite, kaolin, calcium carbonate, calcium sulfate, calcium phosphate and zinc oxide, and of a pigment; and a take-up layer sensitive to and adapted to receive impressions of said transfer layer, said take-up layer adhering to the free face of said transfer layer and consisting essentially of a dried resinous substance selected from the group consisting of vinyl polymers, ethyl cellulose, benzyl cellulose, methyl cellulose, carboxymethyl cellulose, polydiolefines, diolefine-styrene mixed polymers, polycarbonates, colophonium, copal, abietic-maleic resins and cumarone resins, and of an effective amount of at least one plasticizer in which said resinous substance is soluble, whereby said take-up layer is adapted to receive impressions transferred thereto from a transfer layer of the type described, and whereby said transfer layer when in contact with a take-up layer of the type described is adapted to transfer impressions thereto.

26. A copy paper or the like, comprising a carrier sheet provided on one face thereof with a transfer layer having a thickness of 0.005–0.15 mm. and consisting essentially of a resinous substance maintained in an amount of between about 4–20% by weight of said transfer layer, said resinous substance being selected from the group consisting of polyvinyl acetate, mixed polymerisates of polyvinyl acetate, colophonim, polymethylmethacrylate, polymethylacrylate, polycarbonates, polystyrene, polychloroprene, styrene-butadiene copolymers, synthetic cellulose resins, cumaron resin and cumaron-phenol resins, of at least one plasticizer for said resinous substance maintained in an amount of 1–4.5 times the amount of said resinous substance, said plasticizer being selected from the group consisting of castor oil, dibutyl phthalate, dioctyl phthalate, diamyl phthalate, tricresyl phosphate, cyclohexyl-p-toluene sulfonamide, dioctyl sebacate, dibutyl stearate, tributyl phosphate and ricinoleic acid, of at least one organic fixing agent in an amount of between 15–90% of the amount of said resinous substance, said organic fixing agent being selected from the group consisting of tannic acid, phthalic acid, gallic acid, digallic acid, salicylic acid, phenyl salicylate, 4 - butyl - phenyl - salicylate, 5 - chloro - 2 - hydroxy-benzophenone, 2,4-dibenzoyl-resorcine, phenol and pyrogallic acid, of at least one inorganic colloidal substance present in an amount of between about 1.15–1.70 times the amount of said resinous substance plus said plasticizer therefor and selected from the group consisting of bentonite, kaolin, calcium carbonate, calcium sulfate, calcium phosphate and zinc oxide, and of a pigment in an amount of between 2.5–20% by weight of the weight of said transfer layer, whereby upon the making of an impression on the opposite face of said carrier sheet when said one face thereof is in contact with a face of a take-up sheet sensitive to and adapted to receive said transfer layer a portion of the transfer layer corresponding to said impression is transferred to and adheres to said take-up sheet, thereby making a copy of said impression thereon.

27. A copy paper or the like, comprising a carrier sheet provided on one face thereof with a transfer layer having a thickness of 0.005–0.015 mm. and consisting essentially of a resinous substance maintained in an amount of between about 4–20% by weight of said transfer layer, said resinous substance being selected from the group consisting of polyvinyl acetate, mixed polymerisates of polyvinyl acetate, colophonium, polymethylmethacrylate, polymethylacrylate, polycarbonates, polystyrene, polychloroprene, styrene-butadiene copolymers, synthetic cellulose resins, cumarone resin and cumarone-phenol resins, of at least one plasticizer for said resinous substance maintained in an amount of between 1–4.5 times the amount of said resinous substance, said plasticizer being selected from the group consisting of castor oil, dibutyl phthalate, dioctyl phthalate, diamyl phthalate, tricresyl phosphate, cyclohexyl-p-toluene sulfonamide, dioctyl sebacate, dibutyl stearate, tributyl phosphate and ricinoleic acid, of at least one organic fixing agent present in an amount of between 15–90% of the amount of said resinous substance, said organic fixing agent being selected from the group consisting of tannic acid, phthalic acid, gallic acid, digallic acid, salicylic acid, phenyl salicylate, 4-butylphenyl-salicylate, 5-chloro-2-hydroxy-benzophenone, 2,4-di-benzoyl-resorcin, phenol and pyrogallic acid, of at least one inorganic colloidal substance present in an amount of between about 1.15–1.70 times the amount of said resinous substance plus said plasticizer therefor and selected from the group consisting of bentonite, kaolin, calcium carbonate, calcium sulfate, calcium phosphate and zinc oxide, and of a pigment in an amount of between 2.5–20% by weight of the weight of said transfer layer and provided on the other face thereof with a take-up layer sensitive to and adapted to receive impressions of said transfer layer, said take-up layer consisting essentially of a dried resinous substance selected from the group consisting of vinyl polymers, ethyl cellulose, benzyl cellulose, methyl cellulose, carboxymethyl cellulose, polydiolefines, diolefine-styrene mixed polymers, polycarbonate, colophonium, copal, abietic-maleic resins and cumarone resins, and of at least one plasticizer maintained in an amount of between 10–50% by weight of said resinous substance and selected from the group of primary plasticizers consisting of tricresyl phosphate, dioctyl phthalate, dioctyl sebacate and cyclohexyl-p-toluene sulfonamide, in which said resinous substance is soluble, whereby said take-up layer of the type described is adapted to accept impressions formed of said transfer layer.

28. A sheet assembly composed of two sheets one of which is provided on one face with a transfer layer having a thickness of between 0.005–0.015 mm., and which is adapted to be placed in face to face contact with the other sheet which is provided with a take-up layer, said transfer layer consisting essentially of a resinous substance maintained in an amount of between about 4–20% by weight of said transfer layer, said resinous substance being selected from the group consisting of polyvinyl acetate, mixed polymerisates of polyvinyl acetate, colophonium, polymethylmethacrylate, polymethylacrylate, polycarbonates, polystyrene, polychloroprene, styrene-butadiene copolymers, synthetic cellulose resins, cumarone resin and cumarone-phenol resins, of at least one plasticizer for said resinous substance maintained in an amount of

between 1–4.5 times the amount of said resinous substance and selected from the group consisting of castor oil, dibutyl phthalate, dioctyl phthalate, diamyl phthalate, tricresyl phosphate, cyclohexyl-p-toluene sulfonamide, dioctyl sebacate, dibutyl stearate, tributyl phosphate and ricinoleic acid, of at least one organic fixing agent present in an amount of between about 15–90% of the amount of said resinous substance and selected from the group consisting of tannic acid, phthalic acid, gallic acid, digallic acid, salicylic acid, phenyl salicylate, 4-butylphenyl salicylate, 5-chloro-2-hydroxy-benzophenone, 2,4-dibenzoyl-resorcin, phenol, and pyrogallic acid, of at least one inorganic colloidal substance present in an amount of between about 1.15 to 1.70 times the amount of said resinous substance plus said plasticizer therefor and selected from the group consisting of bentonite, kaolin, calcium carbonate, calcium sulfate, calcium phosphate and zinc oxide, and of a pigment in an amount of between 2.5–20% by weight of the weight of said transfer layer, and said take-up layer, consisting essentially of a dried resinous substance selected from the group consisting of vinyl polymers, ethyl cellulose, benzyl cellulose, methyl cellulose, carboxymethyl cellulose, polydiolefins, diolefine-styrene mixed polymers, polycarbonates, colophonium, copal, abietic-maleic resins and cumarone resins, and of at least one plasticizer maintained in an amount of between about 10–50% by weight of said resinous substance and selected from the group of primary plasticizers consisting of tricresyl phosphate, dioctyl phthalate, dioctyl sebacate and cyclohexyl-p-toluene sulfonamide, in which said resinous substance is soluble.

29. A copy paper or the like, comprising a carrier sheet provided on one face thereof with a transfer layer having a thickness of between about 0.005–0.015 mm. and consisting essentially of a resinous substance maintained in an amount of between about 4–20% by weight of said transfer layer, said resinous substance being selected from the group consisting of methyl cellulose, benzyl cellulose, ethyl cellulose, nitrocellulose, diacetyl cellulose and fatty acid ester of cellulose, of at least one primary plasticizer for said resinous substance present in an amount of between about 1–4.5 times the amount of said resinous substance, said primary plasticizer being selected from the group consisting of diethyl phthalate, dibutyl phthalate, dioctyl phthalate, and dioctyl sebacate, of at least one secondary plasticizer selected from the group consisting of castor oil and ricinoleic acid in an amount of between about 1–4.5 times the amount of said resinous substance, of at least one inorganic colloidal substance present in an amount of about 1.15–1.70 times the amount of said resinous substance plus said plasticizer therefor and selected from the group consisting of bentonite, kaolin, calcium carbonate, calcium sulfate, calcium phosphate and zinc oxide, and a dyestuff in an amount of 2.5–20% by weight of the weight of said transfer layer, whereby upon the making of an impression on the opposite face of said carrier sheet when said one face thereof is in contact with a face of a take-up sheet sensitive to and adapted to receive said transfer layer, a portion of the transfer layer corresponding to said impression is transferred to and adheres to said take-up sheet, thereby making a copy of said impression thereon.

30. A copy paper or the like, comprising a carrier sheet provided on one face thereof with a transfer layer having a thickness of 0.005–0.15 mm. and consisting essentially of a resinous substance maintained in an amount of between about 4–20% by weight of said transfer layer and being selected from the group consisting of methyl cellulose, benzyl cellulose, ethyl cellulose, nitrocellulose, diacetyl cellulose and fatty acid ester of cellulose, of at least one primary plasticizer for said resinous substance present in an amount of between about 1–4.5 times the amount of said resinous substance selected from the group consisting of diethylphthalate, dibutyl phthalate, dioctyl phthalate and dioctyl sebacate, of at least one secondary plasticizer selected from the group consisting of castor oil and ricinoleic acid in an amount of 1–4.5 times the amount of said resinous substance, of at least one inorganic colloidal substance present in an amount of between about 1.15 to 1.70 times the amount of said resinous substance plus said plasticizer therefor and selected from the group consisting of bentonite, kaolin, calcium carbonate, calcium sulfate, calcium phosphate and zinc oxide, and of a dyestuff in an amount of 2.5–20% by weight of the weight of said transfer layer; and a protective, pigment-containing layer covering said transfer layer, whereby upon the making of an impression on the opposite face of said carrier sheet when said one face thereof is in contact with a face of a take-up sheet sensitive to and adapted to receive said transfer layer, a portion of the transfer layer corresponding to said impression is transferred to and adheres to said take-up sheet, thereby making a copy of said impression thereon.

31. A copy paper or the like, comprising a carrier sheet provided with a transfer layer having a thickness of between about 0.005–0.15 mm. and consisting essentially of a resinous substance maintained in an amount of between about 4–20% by weight of said transfer layer and selected from the group consisting of polyvinyl acetate, mixed polymerisates of polyvinyl acetate, colophonium, polymethylacrylate, polymethylmethacrylate, polycarbonates, polychloroprene, polystyrene, styrene-butadiene copolymers, synthetic cellulose resins, cumarone resin and cumarone-phenol resins, of at least one plasticizer for said resinous substance maintained in an amount of 1–4.5 times the amount of said resinous substance and selected from the group consisting of castor oil, dibutyl phthalate, dioctyl phthalate, diamyl phthalate, tricresyl phosphate, cyclohexyl-p-toluene sulfonamide, dioctyl sebacate, dibutyl stearate, tributyl phosphate and ricinoleic acid, of at least one organic fixing agent preferably present in an amount of between 15–90% of the amount of said resinous substance and selected from the group consisting of tannic acid, phthalic acid, gallic acid, digallic acid, salicyclic acid, phenyl salicyclate, 4-butylphenyl salicyclate, 5-chloro-2-hydroxy-benzophenone, 2,4-dibenzoyl resorcin, phenol and pyrogallic acid, of at least one inorganic substance present in an amount of about 1.15–1.70 times the amount of said resinous substance plus said plasticizer therefor selected from the group consisting of bentonite, kaolin, calcium carbonate, calcium sulfate, calcium phosphate and zinc oxide, and of a pigment in an amount of 2.5–20% by weight of the weight of said transfer layer, and also provided with a take-up layer sensitive to and adapted to receive impressions of said transfer layer, said take-up layer consisting essentially of a dried resinous substance selected from the group consisting of vinyl polymers, ethyl cellulose, benzyl cellulose, methyl cellulose, carboxymethyl cellulose, polydiolefines, diolefine-styrene mixed polymers, polycarbonates, colophonium, copal, abietic-maleic resins and cumarone resins, and at least one plasticizer in which said resinous substance is soluble maintained in an amount of about 10–50% by weight of said resinous substance and selected from the group of primary plasticizers consisting of tricresyl phosphate, dioctyl phthalate, dioctyl sebacate and cyclohexyl-p-toluene sulfonamide, whereby said take-up layer is adapted to receive impressions transferred thereto from a transfer layer of the type described, and whereby said transfer layer when in contact with a take-up layer of the type described is adapted to transfer impressions thereto.

32. A copy paper or the like, comprising, in combination, a carrier sheet having on one face thereof; a transfer layer having a thickness of 0.005–0.015 mm. and consisting of a resinous substance maintained in an amount of about 4–20% by weight of said transfer layer and selected from the group consisting of polyvinyl ace-

tate, mixed polymerisates of polyvinyl acetate, colophonium, polymethylacrylate, polymethylmethacrylate, polycarbonates, polystyrene, polychloroprene, styrene-butadiene copolymers, synthetic cellulose resins, cumarone resin and cumarone-phenol resins, of at least one plasticizer for said resinous substance maintained in an amount of 1–4.5 times the amount of said resinous substance and selected from the group consisting of castor oil, dibutyl phthalate, dioctyl phthalate, diamyl phthalate, tricresyl phosphate, cyclohexyl-p-toluene sulfonamide, dioctyl sebacate, dibutyl stearate, tributyl phosphate and ricinoleic acid, of at least one organic fixing agent preferably present in an amount of between 15–90% of the amount of said resinous substance selected from the group consisting of tannic acid, phthalic acid, gallic acid, digallic acid, salicylic acid, phenyl salicylate, 4-butyl-phenyl-salicylate, 5-chloro-2 - hydroxy - benzophenone, 2,4-benzoyl-resorcine, phenol and pyrogallic acid, of at least one inorganic colloidal substance present in an amount of about 1.15 to 1.70 times the amount of said resinous substance plus said plasticizer therefor and selected from the group consisting of bentonite, kaolin, calcium carbonate, calcium sulfate, calcium phosphate and zinc oxide, and of a pigment in an amount of 2.5–20% by weight of the weight of said transfer layer; and a take-up layer sensitive to and adapted to receive impressions of said transfer layer, said take-up layer adhering to the free face of said transfer layer and consisting essentially of a dried resinous substance selected from the group consisting of vinyl polymers, ethyl cellulose, benzyl cellulose, methyl cellulose, carboxy-methyl cellulose, polydiolefines, diolefine-styrene mixed polymers, polycarbonates, colophonium, copal, abietic-maleic resins and cumarone resins, and of at least one plasticizer in which said resinous substance is soluble maintained in an amount of between about 10–50% by weight of said resinous substance and selected from the group of primary plasticizers consisting of tricresyl phosphate, dioctyl phthalate, dioctyl sebacate and cyclohexyl-p-toluene sulfonamide, whereby said take-up layer is adapted to receive impressions transferred thereto from a transfer layer of the type described, and whereby said transfer layer when in contact with a take-up layer of the type described is adapted to transfer impressions thereto.

References Cited by the Examiner

UNITED STATES PATENTS

2,146,619	2/39	Bowlby	117—157
2,398,042	4/46	Salo	117—157
2,554,662	5/51	Cowgill	117—155
2,788,340	4/57	Dannels	117—155
2,800,077	7/57	Marron	117—36.1
2,820,717	1/58	Newman et al.	117—36.1
2,872,340	2/59	Newman et al.	117—36.1
2,893,890	7/59	Harvey	117—36.1
2,943,952	7/60	Clark	117—36.1
2,944,037	7/60	Clark	117—36.1
2,984,342	5/61	Smith	117—155
2,984,582	5/61	Newman et al.	117—36.4
2,989,493	6/61	Clark et al.	117—36.1
3,037,879	6/62	Newman et al.	117—36.1

FOREIGN PATENTS

392,220	5/33	Great Britain.

RICHARD D. NEVIUS, *Primary Examiner.*

MURRAY KATZ, *Examiner.*

UNITED STATES PATENT OFFICE

CERTIFICATE OF CORRECTION

Patent No. 3,169,880 February 16, 1965

Eugen Strauss

It is hereby certified that error appears in the above numbered patent requiring correction and that the said Letters Patent should read as corrected below.

In the drawings, Sheet 2, in FIG. 4a correct reference numerals 2, 3, 5, and 6 to read, respectively, 42, 43, 45 and 46; correct reference numeral 1 as it appears in the left-hand portion of FIG. 4a to read 41; correct reference numeral 1 as it appears adjacent to element 6 to read 41′; in FIG. 4b correct reference numerals 1, 1′, 2, 3, 5, and 6 to read, respectively, 41, 41′, 42, 43, 45 and 46; in FIG. 5 correct reference numerals 1, 2 and 7 to read, respectively, 51, 52 and 57; in the legend correct reference numerals 1, 1′ to read 41, 41′, 51; correct reference numeral 2 to read 42, 52; correct reference numeral 3 to read 43; correct reference numeral 5 to read 45; correct reference numeral 6 to read 46; correct reference numeral 7 to read 47, 57.

Signed and sealed this 26th day of April 1966.

(SEAL)
Attest:

ERNEST W. SWIDER
Attesting Officer

EDWARD J. BRENNER
Commissioner of Patents