Dec. 15, 1964 R. E. BLACK ETAL 3,161,504

RADIATION SOURCE AND METHOD FOR MAKING SAME

Filed March 31, 1960

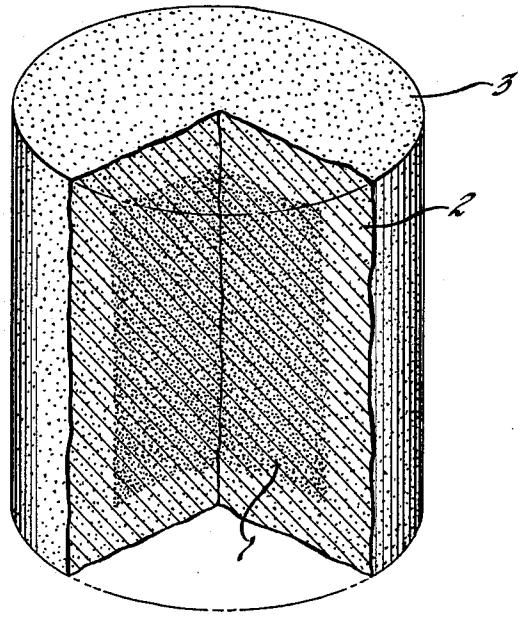

Fig. 1

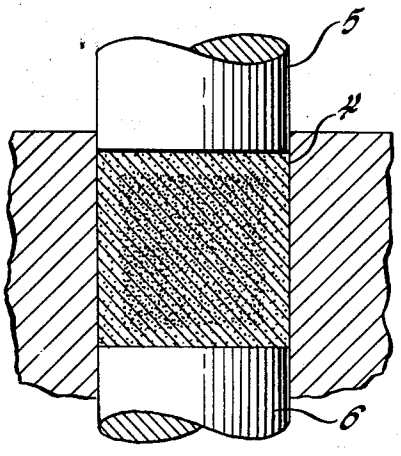

Fig. 3

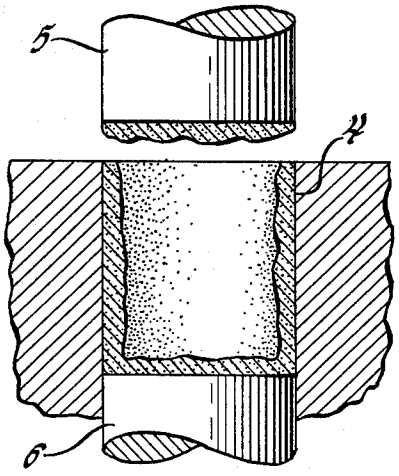

Fig. 2

INVENTOR.
Robert E. Black
BY & Farno L. Green
Paul J. Leising
ATTORNEY

United States Patent Office 3,161,504
Patented Dec. 15, 1964

3,161,504
RADIATION SOURCE AND METHOD FOR MAKING SAME

Robert E. Black, Utica, and Farno L. Green, Bloomfield Hills, Mich., assignors to General Motors Corporation, Detroit, Mich., a corporation of Delaware

Filed Mar. 31, 1960, Ser. No. 19,009
2 Claims. (Cl. 75—206)

This invention relates to a photon radiation source and method for making same. It has as one of its objects the provision of an improved radiation source pellet wherein a rare earth radioisotope serves as the photon emitter. Another object is the provision of a photon source pellet which has improved structural strength and which therefore will withstand mechanical handling without any substantial loss of radioactive material. Another object is the provision of a radioactive source pellet which comprises a mixture of a photon-emitting rare earth and a nonradioactive metal which provides optimum photon emission from the quantity of rare earth included.

In its broadest scope, the radioactive source pellet of this invention is a dense sintered mixture of a rare earth radioisotope, which serves as the photon source material, and nonradioactive aluminum or columbium, preferably the former, which serves as the binder. The pellet is made by forming a mixture of aluminum or columbium powder and a rare earth or rare earth compound, preferably the oxide, pressing the mixture into a powder compact of the shape desired and then sintering the compact. The rare earth can be irradiated with thermal neutrons to its photon-emitting radioisotopic form either prior to forming the mixture or by irradiating the pellet after the sintering operation. The rare earths samarium, gadolinium, europium, ytterbium and thulium are excellent for the practice of the invention. In the preferred embodiments the concentration of the rare earth is greater in the center portions of the pellet than in surface portions. In this manner the surface portions of the pellet, which are rich in binder metal and therefore of high ductility and elasticity, provide the pellet with optimum structural strength, durability and resistance to loss of radioactive material from mechanical handling.

The following detailed description of a preferred embodiment will provide a clearer understanding of the invention, reference being made to the appended drawings in which:

FIGURE 1 shows a sectional view of a cylindrical radioactive pellet made in accordance with the invention; and

FIGURES 2 and 3 illustrate the preferred method for making the pellet shown in FIGURE 1.

Referring now to FIGURE 1, the darkened area **1** in the center portion of the pellet indicates a relatively high concentration of samarium-145 oxide and the light portions **2** at the surface of the pellet indicate a relatively low concentration of said oxide and a high concentration of aluminum. It is especially desirable that the portions immediately adjacent the top and bottom surfaces of the pellet be substantially free of rare earth oxide such that the edges **3** will have optimum resistance to cracking or crumbling from mechanical handling and such that the pellet can be contacted on its top and bottom surfaces without rub-off of radioactive material.

The following example, described with reference to FIGURES 2 and 3 of the drawings, will illustrate the preferred method for manufacture of the pellet.

First, the interior surfaces of a cylindrical die opening **4** and the facing surfaces of mating punches **5** and **6** are lightly coated with a tacky organic binder such as beeswax which can be applied in admixture with a suitable

solvent such as benzene. A charge of −200 to −325 mesh aluminum powder is applied to the coated die such that a uniform layer sticks to all the die surfaces, and the coated punches are in a like manner covered with a layer of the aluminum powder, all as shown in FIGURE 2. Then the lower punch is inserted and the die opening filled with a uniform mixture of powdered rare earth oxide in an amount up to about 80% by weight, and the remainder aluminum powder of the aforesaid mesh size. After the die is filled the upper punch, coated with aluminum powder, is inserted and pressure on the order of 350,000 pounds per square inch is applied to compress the said mixture into a self-sustaining compact as shown in FIGURE 3. This compact is then removed from the die and heated to about 1000° F. for about one-half hour in air to cause sintering of the aluminum. The unitary pellet resulting from the sintering operation may then be further densified and shaped, if desired, by placing it in a suitable die opening and pressing it with a punch.

In some instances, particularly where the mixture used to form the main body of the pellet has a high percentage of aluminum, it may be advantageous that only certain of the surface portions of the pellet be entirely of aluminum. For example, in the instance of a cylindrical pellet, the cylindrical side walls may, if desired, be of the same composition as the center portion. To make such a pellet a layer of aluminum powder is placed at the bottom of the die cavity, then a layer of a mixture of rare earth oxide and aluminum powder, and over this a top layer of aluminum powder. Pressure is applied, and the three-layered compact can then be sintered and further compacted as described above. Such a pellet will have top and bottom edge portions (equivalent to those indicated at **3** in the embodiment shown in the drawings) which are substantially entirely of aluminum and which are therefore highly resistant to chipping and cracking. Also, the radioisotope-free top and bottom surfaces allow for handling of the pellet without rub-off of radioactive material.

If it is desired to incorporate a greater amount of radioactive material in the pellet, the surface portions instead of being formed entirely of aluminum can be formed from an aluminum-rich mixture of aluminum and rare earth oxide. For example, the surface portions can be made of a mixture of 75% aluminum and 25% rare earth oxide and the center portion of 75% rare earth oxide and 25% aluminum.

After the pellet has been completely formed the rare earth within the pellet can be rendered radioactive by irradiation of the pellet in a nuclear reactor. For example, a number of the pellets were successfully irradiated by subjecting them to a flux of about 2×10^{13} thermal neutrons/cm.^{2}/sec. for six weeks in the LITR at Oak Ridge, Tennessee.

The nuclear reactions of interest for typical rare earths during the thermal neutron irradiation are:

$$\begin{aligned}
&\text{Sm-144}+n\rightarrow\text{Sm-145}\\
&\text{Sm-152}+n\rightarrow\text{Sm-153}\\
&\text{Sm-154}+n\rightarrow\text{Sm-155}\rightarrow\text{Eu-155}\\
&\text{Gd-151}+n\rightarrow\text{Gd-153}\\
&\text{Tm-169}+n\rightarrow\text{Tm-170}\\
&\text{Yb-168}+n\rightarrow\text{Yb-169}
\end{aligned}$$

and the photon-emitting nuclear reactions of the radioisotopes so formed are:

$$\begin{aligned}
&\text{Sm-145}\rightarrow\text{Pm-145}+\text{photons}\\
&\text{Sm-153}\rightarrow\text{Eu-153}+\text{photons}\\
&\text{Eu-155}\rightarrow\text{Gd-155}+\text{photons}\\
&\text{Gd-153}\rightarrow\text{Eu-153}+\text{photons}\\
&\text{Tm-170}\rightarrow\text{Er-170}+\text{photons}\\
&\text{Yb-169}\rightarrow\text{Tm-169}+\text{photons}
\end{aligned}$$

If desired, the rare earth can be irradiated prior to forming the pellet through this has the disadvantage of requiring the handling of radioactive material during pellet manufacture.

The radioactive pellets of this invention are useful as gamma radiation, X-ray and bremsstrahlung sources for radiography and for liquid level gauges, density gauges and the like which are well known and which are coming into common use in industry. They have the advantage of excellent mechanical strength and related physical properties such that there is good assurance against loss of radioactive material in handling. The photons emitted are within relatively narrow energy levels and hence the source pellets of this invention approach the ideal of a single energy level emission. The columbium of aluminum, in combination with the rare earth, provides superior physical properties but has no significant adverse nuclear effect. Also, where the rare earth is irradiated after pellet formation, the binder, separating as it does the rare earth particles, diminishes the neuton shielding effect of one rare earth particle on another and thereby provides optimum radioactivation. The preferred embodiment wherein the rare earth concentration is low in surface portions of the pellet is particularly advantageous in this respect as well as with respect to mechanical strength.

It will be understood that while the invention has been described particularly with reference to preferred embodiments thereof, it is not so limited since changes and modifications may be made all within the full and intended scope of the claims which follow.

We claim:

1. A method for making a photon radiation source comprising the steps of coating the surfaces of a die opening with a tacky organic material, applying to the tacky surfaces a powdered metal such that a layer of the powdered metal is formed on said surfaces, said metal being selected from the group consisting of aluminum, columbium and aluminum-columbium alloys, placing in the remaining portions of the die opening a powdered mixture consisting essentially of a rare earth material and said metal, adding a powdered layer of said metal over said mixture and then pressing to form a composite powder compact having surface portions of said metal and a center portion of said mixture and heating said compact to cause sintering thereof.

2. A method for making a photon radiation source comprising the steps of coating the surfaces of a die opening and mating upper and lower punches with a tacky organic material, inserting the coated bottom punch into the die opening, applying to the tacky surfaces a powdered metal such that a layer of the powdered metal is formed on said surfaces, such metal being selected from the group consisting of aluminum, columbium and aluminum-columbium alloys, filling the coated die opening with a powdered mixture consisting essentially of a rare earth oxide and said metal, inserting the coated upper punch in the die opening and pressing to form a composite powder compact having surface portions of said metal and a center portion of said mixture, heating said compact to cause sintering thereof, pressing the sintered body to increase its density, and then subjecting the sintered body to thermal neutron irradiation to convert the rare earth material to a photon-emitting radioisotope.

References Cited in the file of this patent

UNITED STATES PATENTS

2,592,115	Carroll	Apr. 8, 1952
2,805,473	Handwerk	Sept. 10, 1957
2,814,849	Hamilton	Dec. 3, 1957
2,866,741	Hausner	Dec. 30, 1958
2,975,113	Gordon	Mar. 14, 1961