March 11, 1941. R. R. JANES 2,234,914

ATTACHMENT FOR DYEING YARNS

Filed Dec. 9, 1939 3 Sheets-Sheet 1

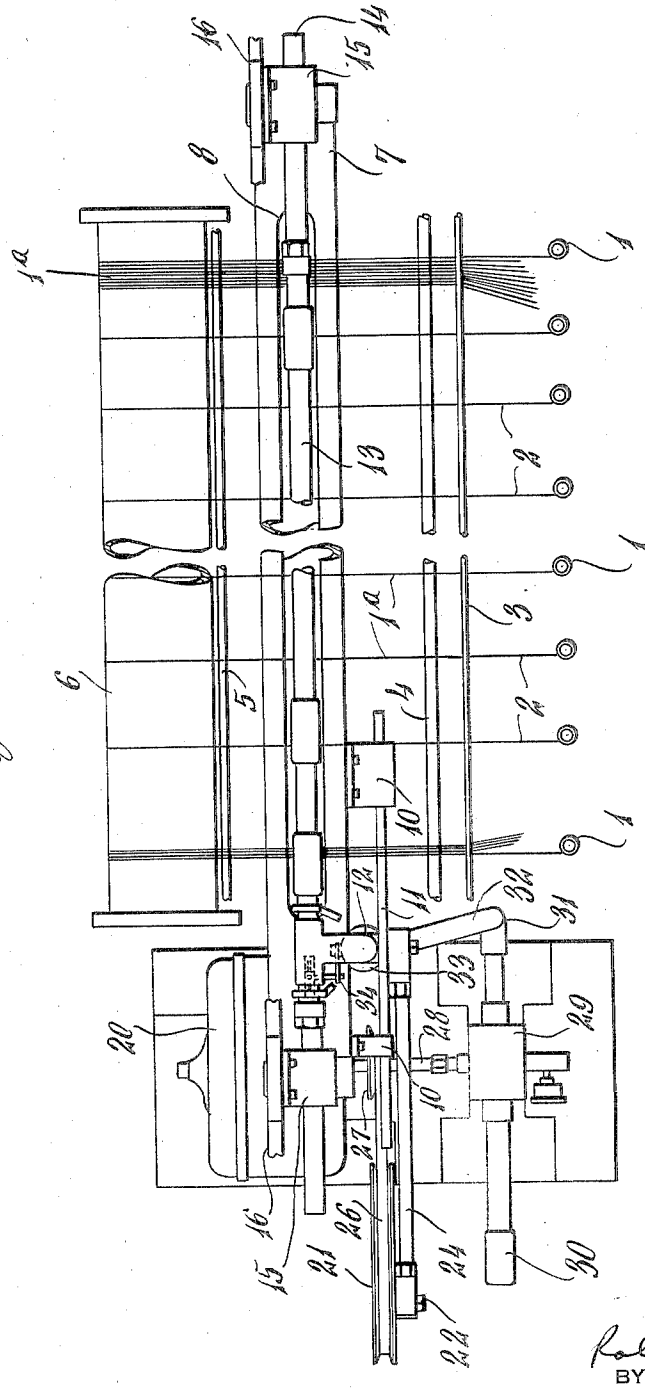

Fig. 1.

INVENTOR
Ralph R James
BY
Abraham Aaron
ATTORNEY

March 11, 1941. R. R. JANES 2,234,914

ATTACHMENT FOR DYEING YARNS

Filed Dec. 9, 1939 3 Sheets-Sheet 2

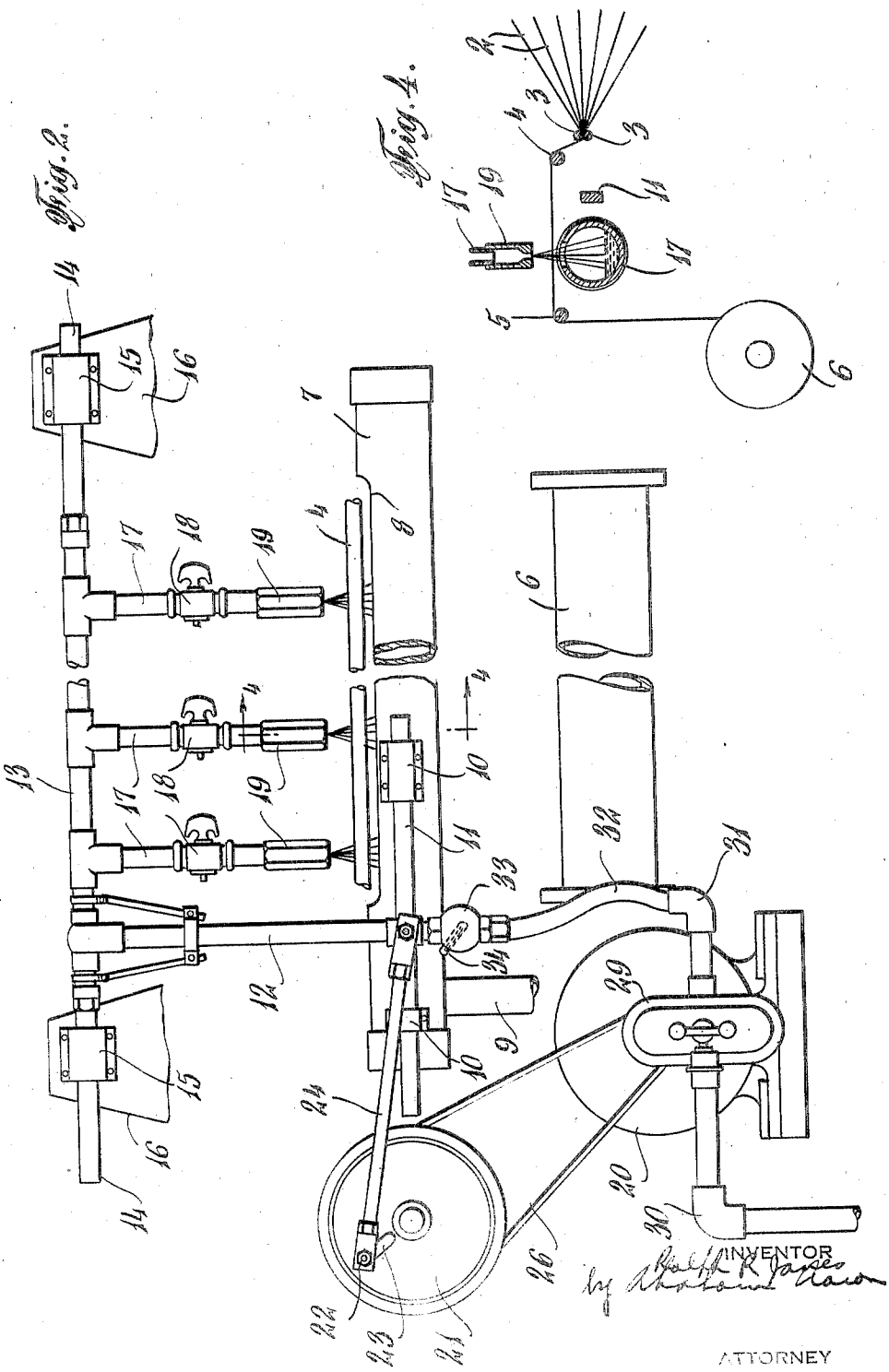

INVENTOR
Ralph R. Janes
by Abraham Hanson

ATTORNEY

March 11, 1941. R. R. JANES 2,234,914

ATTACHMENT FOR DYEING YARNS

Filed Dec. 9, 1939 3 Sheets-Sheet 3

Fig. 3.

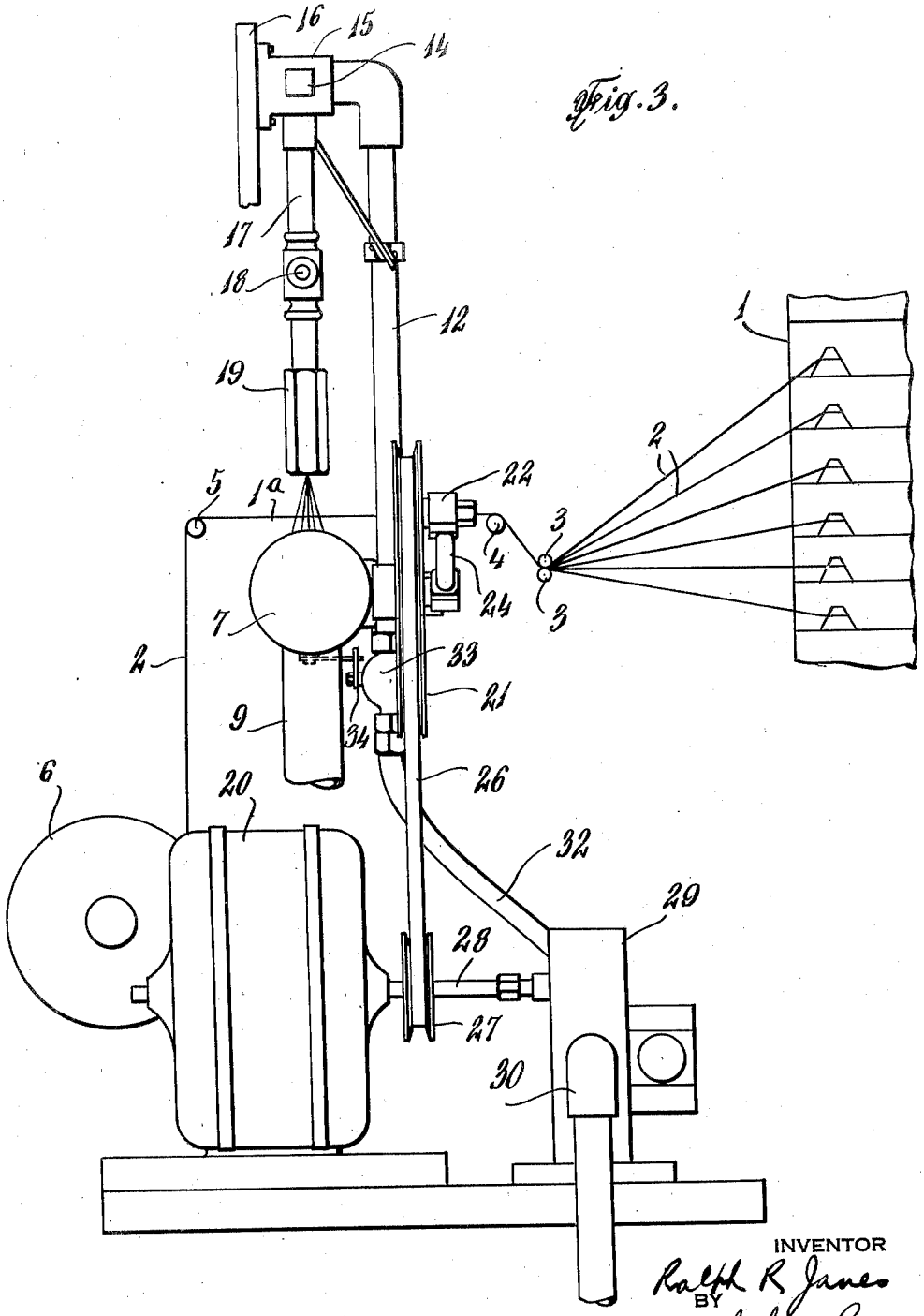

INVENTOR
Ralph R. Janes
BY
Abraham Aaron
ATTORNEY

Patented Mar. 11, 1941

2,234,914

UNITED STATES PATENT OFFICE

2,234,914

ATTACHMENT FOR DYEING YARNS

Ralph R. Janes, Roanoke, Va., assignor to Roanoke Mills, Inc., Roanoke, Va.

Application December 9, 1939, Serial No. 308,362

1 Claim. (Cl. 68—205)

The invention relates to random dyeing machines and has for its object to provide a device of this type wherein yarn is dyed as it longitudinally travels, and the dye liquid is sprayed onto the yarn from spray nozzles, which nozzles are reciprocated angularly across the path of movement of the yarn.

A further object is to provide a plurality of nozzles cooperating with a plurality of strands of yarn for random dyeing of the yarn as the yarn passes from a creel to a beam or warp form.

A further object is to provide an open trough in the plane of the nozzles so that the dye from the nozzles, which is not deposited on the yarn, will be collected and pump means for recirculating the dye.

A further object is to provide a reciprocating cross head reciprocated from a source of power and to support the nozzles from the cross head so that said nozzles will reciprocate with the cross head.

A further object is to provide means whereby the length of the stroke of the cross head may be varied for varying the random dyeing of the yarn, thereby allowing a variation in pattern of material when the yarn is woven or knitted.

A further object is to provide a flexible pipe connection between the pump and a pipe carried by the cross head leading to the nozzles.

A further object is to provide valve means whereby the flow of liquid to the nozzles may be varied.

With the above and other objects in view the invention resides in the combination and arrangement of parts as hereinafter set forth, shown in the drawings, described and claimed, it being understood that changes in the precise embodiment of the invention may be made within the scope of what is claimed without departing from the spirit of the invention.

In the drawings:

Figure 1 is a top plan view of the machine.

Figure 2 is a side elevation of the machine.

Figure 3 is an end elevation of the machine.

Figure 4 is a vertical transverse sectional view through a portion of one of the nozzles, the dye trough and showing the yarn passing between the nozzle and the trough.

Referring to the drawings, the numeral 1 designates a conventional form of creel from which the strands of yarn 2, to be dyed, are fed. The strands pass between superimposed guide rollers 3, and thence upwardly and transversely over the guide rollers 4 and 5 and in space relation as shown in Figure 1, so the strands present horizontal portions 1a to the spraying operation.

The various strands 2 pass downwardly and around a rotatable beam 6 or other mechanism, which may be rotated in any suitable manner. Disposed below the horizontal portions 1a of the yarn and in transverse relation thereto is a dye collecting trough 7 having its upper side open as at 8, and excess dye is collected in the trough 7 during the dyeing operation and is conveyed to a tank or other source of supply through a drain pipe 9. Reciprocally mounted in brackets 10 on one side of the trough 7 is a nozzle supporting bar 11, and secured to said bar is an upwardly extending arm 12 formed from tubular material, which arm terminates in a horizontally disposed dye conductor pipe 13 above the trough 7. The ends of the dye conductor pipe 13 are provided with guide bars 14, which are guidably mounted in brackets 15 carried by supports 16, which supports are stationary. Pipe 13 is provided with a plurality of downwardly extending branch pipes 17 having valves 18 therein, so that the amount of dye fed to the spraying nozzles 19 may be varied and regulated. It will be seen that the branch pipes and nozzles are in the same vertical longitudinal plane as the trough 7, consequently the trough will collect the excess dye sprayed by the nozzles, and which passes the yarn strands as the nozzles are reciprocated by the mechanism hereinafter set forth for imparting a variegated strand coloring, so that when the yarn is woven or knitted a variegated material will be produced. It will be seen that by shortening or lengthening the stroke of the nozzles the variegated effect of the woven or knitted material varies.

Disposed adjacent the trough 7 is a motor 20 which drives a pulley 21 having an adjustable wrist pin 22 thereon.

The wrist pin 22 is radially adjustable on the pulley 21 in the slot 23 and is adapted to be adjusted towards or away from the axis of the pulley for varying the length of strokes of the nozzles so the yarn strands will have spaced coloring in close or remote relation. This spaced relation of coloring zones may also be varied by varying the speed of movement of the strands. A connecting rod 24 connects the wrist pin 22 and the tubular bracket 12 carried by the reciprocating bar 11 as at 25, therefore it will be seen that as the pulley 21 is rotated by the belt connection 26 to the pulley 27 carried by the motor

shaft 28, the nozzles will be continuously reciprocated.

Disposed adjacent the motor 20 is a rotary pump 29, driven by the shaft 28. The pump has connected to its suction side a dye supply pipe 30, which may lead to any suitable source of supply, however preferably to the same tank into which the drain pipe 9 discharges so the same dye can be recirculated. Pump 29 is provided with a discharge pipe 31, which has connected thereto a flexible pipe 32 terminating in a regulating valve 33 carried by the lower end of the pipe 12, therefore it will be seen that during the operation of the motor the pump will constantly circulate dye to the spraying nozzles 19, and at the same time said nozzles will be reciprocated transversely in relation to the yarn strands. The valve 33 is provided with a lever 34, which may be connected to any suitable type of oscillating mechanism where an intermittent flow of dye liquid is desired.

For purposes of illustration, the strands are shown spaced a considerable distance apart, in Figure 1, it is to be understood they may be closer together as shown at the right hand side of Figure 1.

From the above it will be seen that a random dyeing machine is provided wherein a plurality of nozzles are reciprocated transversely across spaced movable strands for imparting a plurality of spaced dyed zones on the strands and the size of the dyed zones and spacing of the dyed zones may be varied.

It will also be seen that an attachment is provided for a dyeing machine which is applicable to any form of warping or transferring of yarns from creel to beam, from beam to other beams and from beam to loom or knotting machine, or any operation, including transferring of yarn from one package to another package as used in preparation of yarns. If desired one or more complete attachments can be located in sequence for simultaneous operation, and by using different colored dyes in each unit patterns of various mixed colors can be produced. Also by varying the spray nozzles and apertures therein different patterns may be obtained.

The invention having been set forth what is claimed as new and useful is:

A strand dyeing machine comprising a dye collecting trough having its upper side open, means for traversing strands across and above said trough in spaced relation thereto, a plurality of spraying nozzles above said strands and above the open side of the trough, means for supplying dye to all of said nozzles from the same source of supply, means for reciprocating said nozzles in fixed relation to each other in a direction across said strands, a reciprocating bar adjacent the trough, means for reciprocating said bar, a dye conductor pipe carried by the reciprocating bar and extending upwardly and terminating in a portion above the trough, guide means for the portion of the pipe above the trough, downwardly extending branch pipes carried by the portion of the dye supply pipe and positioned to discharge into the trough, said nozzles being carried by said branch pipes, and valves in said branch pipes.

RALPH R. JANES.