April 21, 1925. 1,534,519

A. T. GOODING

COMBINATION CIGARETTE AND MATCH CASE

Filed Oct. 11, 1923 2 Sheets-Sheet 1

Fig. 1.

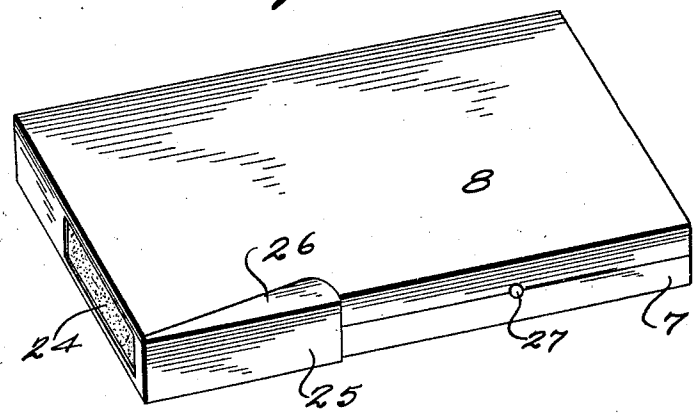

Fig. 2.

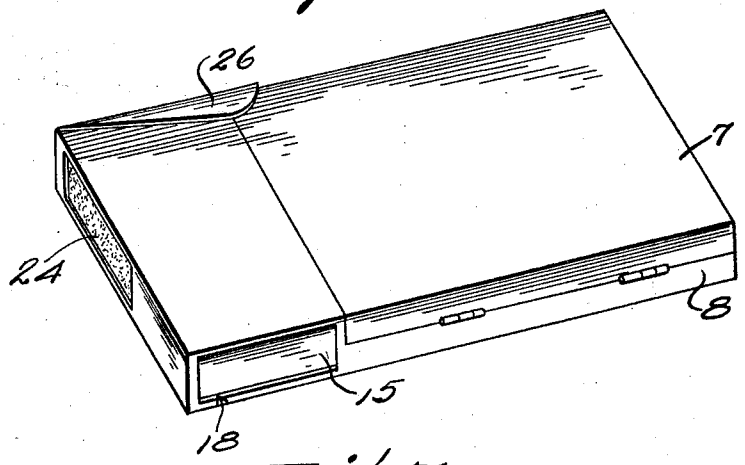

Fig. 3.

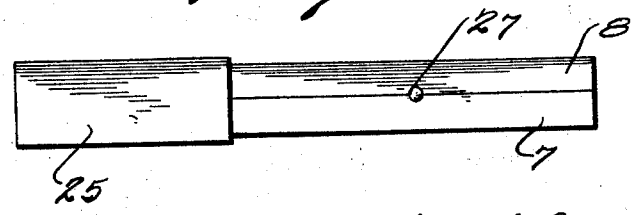

Inventor

Arthur T. Gooding

By

Attorney

April 21, 1925. 1,534,519

A. T. GOODING

COMBINATION CIGARETTE AND MATCH CASE

Filed Oct. 11, 1923 2 Sheets-Sheet 2

Fig. 4.

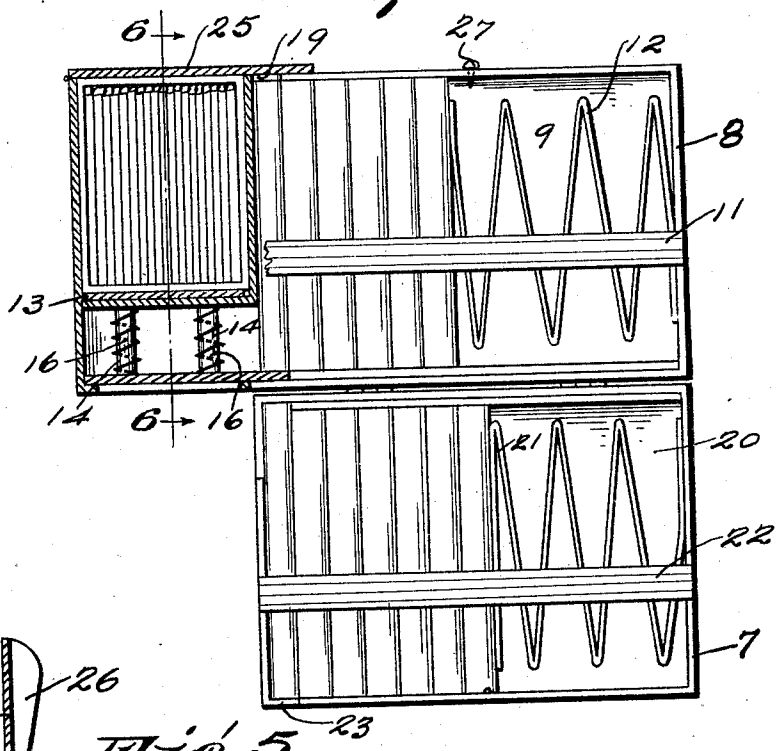

Fig. 5.

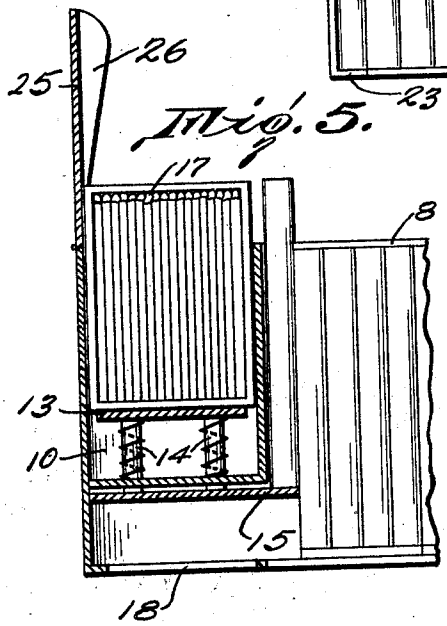

Fig. 6.

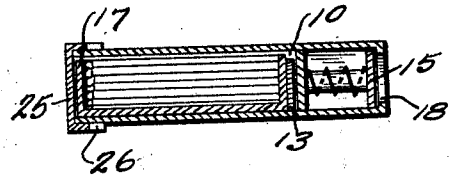

Inventor

Arthur T. Gooding.

By

Attorney

Patented Apr. 21, 1925. 1,534,519

UNITED STATES PATENT OFFICE.

ARTHUR T. GOODING, OF LONDON, ENGLAND.

COMBINATION CIGARETTE AND MATCH CASE.

Application filed October 11, 1923. Serial No. 667,967.

To all whom it may concern:

Be it known that I, ARTHUR T. GOODING, a subject of the King of England, residing at London, in the county of Middlesex and country of England, have invented certain new and useful Improvements in a Combination Cigarette and Match Case, of which the following is a specification.

The present invention consists of a combination cigarette and match case the principal object of which is to provide a compact receptacle from which the cigarettes and matches may be simultaneously dispensed with facility.

Another object of the invention is to provide a relatively small case of this character which will not be cumbersome to carry and which may be manufactured at a relatively low cost.

Other objects of the invention will be apparent from the folowing description of the form of invention illustrated in the accompanying drawings wherein:—

Fig. 1 is a top perspective view of a case constructed in accordance with this invention;

Fig. 2 is a bottom perspective view of the same;

Fig. 3 is a top plan view of the case;

Fig. 4 is a plan view showing the case in open position;

Fig. 5 is a fragmentary longitudinal sectional view of the case illustrating the manner of dispensing the matches and cigarettes; and

Fig. 6 is a sectional view taken on the line 6—6 of Fig. 4.

The case constructed in accordance with the present invention consists of two parts one designated 7 and the other 8. The part 8 is adapted to contain both cigarettes and matches while the part 7 is adapted to contain cigarettes only. When the parts 7 and 8 are in a closed position a substantially oblong structure is provided which is relatively thin so as to be accommodated with convenience in the pocket of the user.

The part 8 is divided into two parts one of which constitutes a cigarette receiving compartment 9 while the other constitutes a match receiving compartment 10. The cigarettes are positioned in the compartment 9 beneath an elastic band 11 and are normally fed toward one end of the compartment by a spring 12. The match compartment 10 is equipped with a follower 13 which carries rods 14 slidably arranged through the bottom of said match compartment and engaged with the upper face of a finger bar 15. Coil springs 16 are convoluted on the rods 14 between the bottom of the compartment 10 and the upper face of the finger bar 15. In this way, the follower is normally held against the bottom of the part 8. A match receptacle 17 may be mounted on the follower 13 and when it is desired to dispense the matches, pressure is exerted upon the finger bar 15 so as to move the follower 13 upwardly against the resistance of the springs 16. An opening 18 is formed in the lower wall of the part 8 through which access is gained to the finger bar 15 for operating the latter. It will be noted that the finger bar 15 projects appreciably beyond the inner wall of the compartment 10 so as to lie beneath one of the cigarettes contained in the compartment 9 so that elevation of the finger bar will not only cause the match receptacle 17 to be elevated but will likewise urge one of the cigarettes outwardly through a complemental opening 19 formed in the top of the part 8.

The part 7 has a single compartment as indicated at 20 which is adapted to contain cigarettes and is equipped with a spring 21 which normally urges the cigarettes toward one end of the part 8. An elastic band 22 embraces the spring 21 and cigarettes for an obvious purpose. The upper wall of the part 7 is provided with an opening 23 which is sufficiently large to permit a cigarette to be urged outwardly therethrough. The finger bar 15 is sufficiently wide to extend not only beneath a cigarette in the compartment 9 but also the adjacent cigarette in the compartment 20 so that if both compartments are filled, two cigarettes will be simultaneously dispensed.

The match receptable 17 may constitute the receptacle part of a safety match box and one wall of the abrasive side of the safety match box may be mounted in the end of the case which carries the matches, as indicated at 24. The top of the match compartment 10 and the openings 19 and 23 are normally covered by a closure 25. This closure has one end hinged on the match end of the case and is provided with margins which overlap the sides of the case and are relatively wide at their outer ends to provide

ears 26 which may be conveniently clasped by the user of the case to release the frictional grip of said ears on the case.

A clasp 27 of standard construction may be employed to normally hold the parts 7 and 8 of the case together. The case may be released by inward pressure on the clasp in a manner well known in the art.

In use of this device the compartments 9, 10, and 20 may be filled in an apparent manner. When it is desired to dispense the cigarettes and matches, it is unnecessary to open up the parts 7 and 8. On the contrary it is only necessary to open the closure 25 and exert pressure upon the finger bar 15 for dispensing the matches and cigarettes in a manner heretofore described. As a cigarette is dispensed from either of the compartments 9 and 10, its place is automatically filled by the action of the springs 12 and 21.

It is of course to be understood that the device of the present invention may be used in other capacities and that various changes may be made therein especially in the details of construction, proportion, and arrangement of parts within the scope of the claims hereto appended.

What is claimed is:—

1. A combined cigarette and match case consisting of a two part hinged structure provided with an opening through which cigarettes may be simultaneously urged from both parts, a match receptacle mounted in one of said parts, and means mounted in one of said parts and operable to simultaneously urge the matches and cigarettes from both of said parts.

2. A combined cigarette and match receptacle including a two part case one of which parts is adapted to receive cigarettes and matches and the other of said parts cigarettes, openings provided in the top of said parts to permit the matches and cigarettes to be dispensed without opening said parts, means for urging the cigarettes and matches from said parts, and means for closing the openings through which said matches and cigarettes are dispensed.

In testimony whereof, I have affixed my signature in the presence of two witnesses.

ARTHUR T. GOODING.

Witnesses:

WALTER J. BARRELL,

ERNEST BARKER.