T. E. SMITBACK.

WASHING-MACHINES.

No. 193,732. Patented July 31, 1877.

Fig. 2.

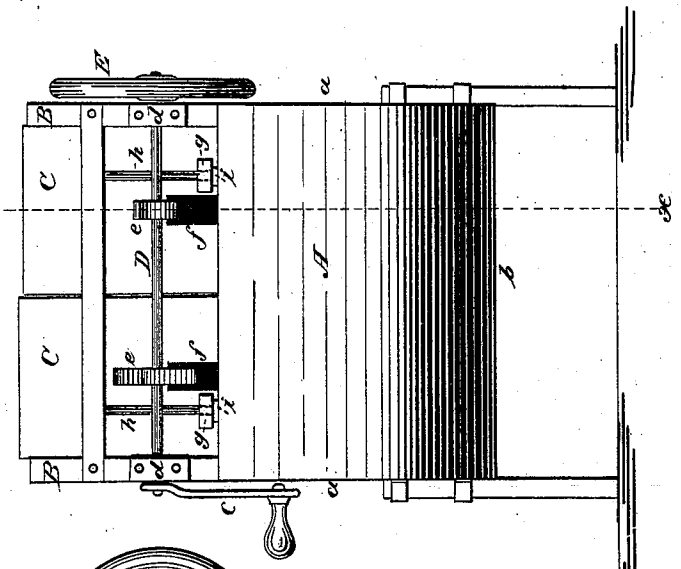

Fig. 1.

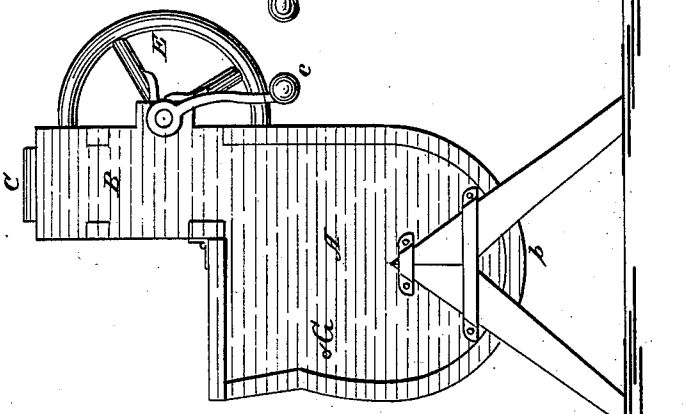

Fig. 3.

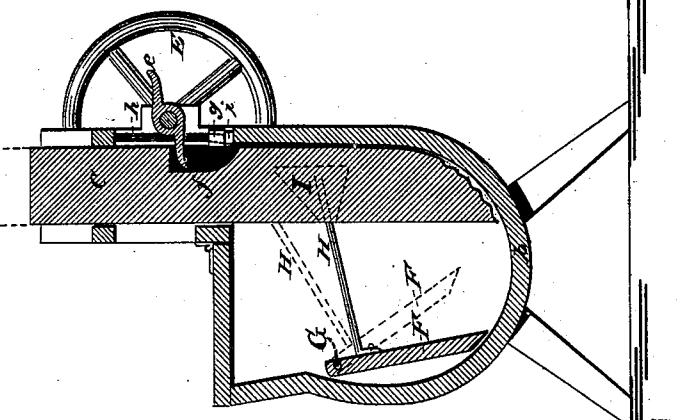

Attest:

E. E. Court

Jno. P. Brooks.

Inventor:

Thore E. Smitback

by Louis Bagger & Co

Attys.

N. PETERS, PHOTO-LITHOGRAPHER, WASHINGTON, D. C.

UNITED STATES PATENT OFFICE.

THORE E. SMITBACK, OF UTICA, WISCONSIN.

IMPROVEMENT IN WASHING-MACHINES.

Specification forming part of Letters Patent No. **193,732**, dated July 31, 1877; application filed March 20, 1877.

To all whom it may concern:

Be it known that I, THORE ERIKSON SMITBACK, of Utica, in the county of Dane and State of Wisconsin, have invented certain new and useful Improvements in Washing-Machines; and I do hereby declare that the following is a full, clear, and exact description thereof, which will enable others skilled in the art to which it appertains to make and use the same, reference being had to the accompanying drawings, which form a part of this specification, and in which—

Figure 1 is a side elevation. Fig. 2 is a rear elevation, and Fig. 3 is a vertical cross-section.

Similar letters of reference indicate corresponding parts in all the figures.

This invention relates to that class of washing-machines in which the clothes are beaten or pounded; and it consists in the construction and arrangement of parts hereinafter more fully shown and described.

In the drawing, A is the box or tub, which is preferably made in the shape shown in the drawing—that is, with a semi-cylindrical bottom, *b*. The sides *a a* have, at the rear end of the box, upward projections or brackets B, between which are placed, inside the box, two or more pounders, C C, consisting of heavy blocks of wood, the lower ends of which are shaped so as to conform to the shape of the bottom of the box, and corrugated so as to make the washing or pounding more effective. D is a shaft, arranged in suitable bearings *d d* on the rear side of brackets B, and having a crank, *c*, and balance-wheel E. It also has two double arms or wings, *e e*, which, when the shaft is rotated by the crank *c*, fit into recesses *f f* in the rear side of the pounders C, thus lifting these to a height which may be regulated by the length of the wings *e*, and then letting them drop down upon the clothes contained in the box. The pounders C have perforated ears or projections *g*, which slide upon suitable guide-strips *h*. Rubber washers *i i* are placed upon these strips on top of the box, so as to take off the force of the shock when the pounders are dropped. The wings *e e* are set upon shaft D at right angles to each other, so as to operate the pounders C alternately.

F F are two press-boards, hinged upon a rod, G, in box A, in front of the pounders C C. H H are rods secured to the boards F, and passing along the sides of the box to the pounders C, the sides of which have triangular recesses I, for accommodating the ends of rods H.

When the pounders are raised in the manner described, they raise the ends of rods H, thus giving a forward motion to the boards F, which, when the pounders are dropped, return to their former position.

The operation of my improved washing-machine will be readily understood from the foregoing description, and by reference to the drawings hereto annexed. After placing the clothes that are to be washed in the box or tub A, with soap and water, the crank *c* is turned, thus lifting the pounders C C alternately, and at the same time operating the press-boards F, which push the clothes in under the pounders, thus doing away with the necessity of doing this work by hand.

Owing to the inclined (semi-cylindrical) shape of the bottom of the box, the batch of clothes which is forced under the pounders by each movement of the press-boards F is, by the downfall of the pounders, forced down under the rest of the contents of the box, thus causing it all to be washed equally well.

Having thus described my invention, I claim and desire to secure by Letters Patent of the United States—

1. The combination of the box or tub A, pounders C, having triangular recesses I, hinged press-boards F, and operating-rods H, all arranged to operate substantially in the manner and for the purpose shown and specified.

2. In a washing-machine constructed substantially as herein described, the pounders C, having perforated brackets *g*, in combination with the guide-rods *h* and rubber pads or washers *i*, substantially as and for the purpose herein shown and specified.

3. The improved washing-machine herein described, consisting, essentially, of the box

or tub A, pounders C, having recesses *f* I, and perforated brackets *g*, shaft D, having crank *c* and wings *e*, hinged press-boards F, and rods H, all combined and arranged to operate substantially in the manner and for the purpose herein shown and specified.

In testimony that I claim the foregoing as my own I have hereto affixed my signature in presence of two witnesses.

THORE ERIKSON SMITBACK.

Witnesses:
ELIZABETH CLEVEN,
Mrs. MARTHA NERESON.