Aug. 23, 1932. T. H. REID. 1,873,217

COLLAPSIBLE TUBE SQUEEZER

Filed Feb. 17, 1931

Fig. 1.

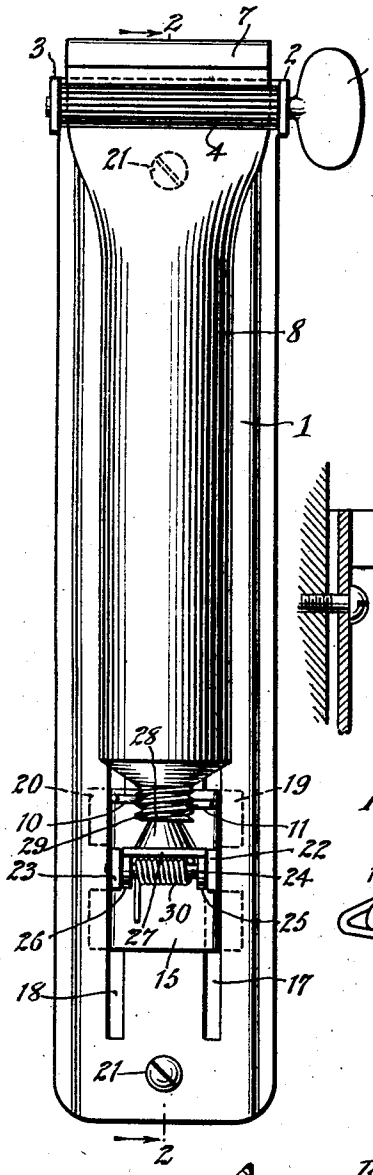

Fig. 2.

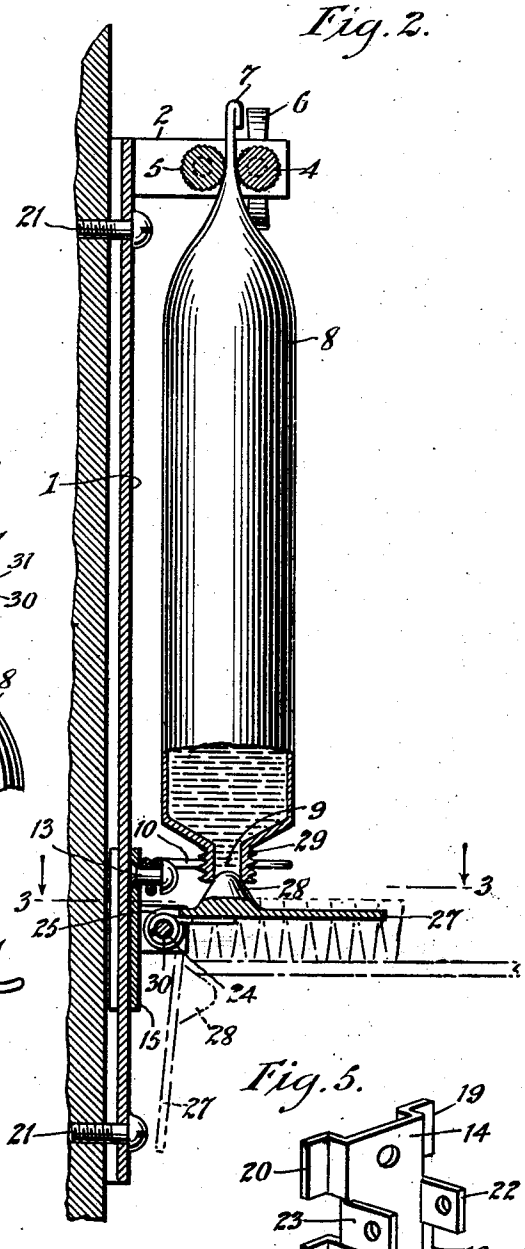

Fig. 6.

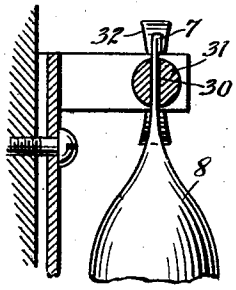

Fig. 4.

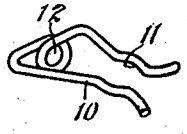

Fig. 5.

Fig. 3.

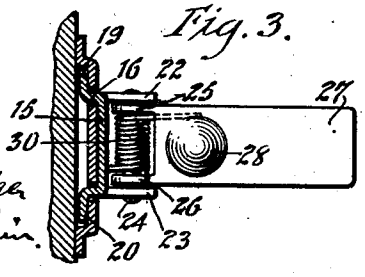

WITNESSES

Edw. Thorpe

A. L. Kitchin.

INVENTOR

Thomas H. Reid

BY Munn & Co.

ATTORNEY

Patented Aug. 23, 1932 1,873,217

UNITED STATES PATENT OFFICE

THOMAS H. REID, OF BROOKLYN, NEW YORK

COLLAPSIBLE TUBE SQUEEZER

Application filed February 17, 1931. Serial No. 516,478.

This invention relates to a squeezing device for collapsible tubes and has for an object to provide a construction wherein a tube may be easily mounted in place and easily squeezed from time to time for removing the contents.

Another object of the invention is to provide a squeezing device for toothpaste tubes or tubes having other material wherein is provided a squeezing apparatus and a guiding apparatus coacting with the squeezing apparatus for maintaining the tube in proper position and normally closed.

A further object, more specifically, is to provide a squeezing device for collapsible tubes wherein a base is provided having squeezing and elevating means at one end and a slide structure normally adjacent the other end, the sliding structure coacting with the other end of the tube for holding the same in proper position and also for maintaining the same normally closed.

In the accompanying drawing—

Figure 1 is a front view of a collapsible tube squeezer disclosing an embodiment of the invention.

Figure 2 is a sectional view through Figure 1 approximately on line 2—2.

Figure 3 is a sectional view through Figure 2 substantially on line 3—3.

Figure 4 is a detailed perspective view showing a resilient tube holding member.

Figure 5 is a perspective view of a slide shown in Figure 1, the same illustrating certain features of the invention.

Figure 6 is a fragmentary sectional view similar to the upper part of Figure 2, but showing a modified form of the invention wherein only a single roller is used.

Referring to the accompanying drawing by numeral, 1 indicates a base plate which is preferably metal and which is preferably formed with integral upstanding ears 2 and 3. These ears are each provided with two apertures for receiving the journal extensions of the squeezing rollers 4 and 5. A thumb member 6 is connected with the roller 4 whereby it may be positively rotated. The closed end of the tube is usually adapted to be engaged by the rollers and forced, for instance, to the position shown in Figure 2, for squeezing and also supporting the tube 8.

In the accompanying drawing a toothpaste tube has been shown, but it will be evident that tubes with other ingredients may be squeezed without departing from the spirit of the invention.

It will be noted that the rollers 4 and 5 not only squeeze the tube but support the same normally and in operation perform the double function of squeezing and raising the tube. The lower end of the tube 8 is provided with the usual threaded neck 9 and before the tube is placed in position the usual cap is removed so that the resilient wire clamp 10 may at the section 11 engage the neck 9 in certain of the threads thereof and pinch the same tightly so as to hold the tube in proper position substantially parallel to the base plate 1. The resilient clamp 10 is provided with a loop portion forming an eye 12 which is designed to receive a securing member, as for instance the rivet 13 which rivet acts to clamp the eyelet firmly against the section 14 of the slide 15. The slide 15 as shown in particular in Figures 3 and 5, is provided with a front section 14, inwardly extending sections 16 which project through the respective slots 17 and 18 in base 1 and sections or flanges 19 and 20 fitting beneath the raised part of the base 1. Base 1 may be mounted in any suitable manner as for instance by the use of screws 21. The slide 15 is cut and bent so that not only is it provided with sections 16 and flanges 19 and 20 but with upstanding ears 22 and 23, said ears being apertured for receiving the pintle 24 which also extends through suitable ears 25 and 26 connected with the plate 27. Plate 27 is provided with a rounded member 28 which acts as a plug or stopper to normally close the outlet 29. A spring 30 surrounds the pintle 24 and acts against plate 27 and against the front section 14 for normally holding the parts in the position shown in Figure 2 whereby the tube 8 will be maintained closed.

When it is desired to receive some toothpaste from the tube 8 the brush is placed against the plate 27 and said plate is forced

downwardly, for instance, to the position shown in dotted lines in Figure 2. The thumb member 6 is then rotated in the proper direction whereupon the tube 8 will be slightly raised and squeezed at the same time. The raising action of the tube is transmitted to neck 9 and clamp 10 to the slide 5 and associated parts so that these members follow as the tube is moved upwardly. By reason of the particular shape of the slide 15 as shown in Figure 5 and the way it interlocks with the base as illustrated in Figures 1 and 2, it is permitted to freely slide upwardly and downwardly and consequently will follow the tube upwardly while at the same time it acts to hold the tube in proper vertical position and hold the closure member 28 so as to readily fit into the discharge opening 29 of neck 9. After the tube has been completely collapsed, it is removed and the slide 15 and associated parts are allowed to move downwardly after which a new tube is inserted and brought substantially to the position shown in Figure 2 where it is ready for further squeezing action if desired

Referring particularly to Figure 6, it will be noted that the end 7 of tube 8 extends through a slot 30′ in the roller 31. Roller 31 is provided with a thumb member 32 whereby the roller may be rotated and consequently the end 7 wound around the roller. This action will draw the tube 8 upwardly and squeeze the same as it is wound on roller 31. In this way, an upward movement and squeezing action is secured, similar to the action of the parts as illustrated in Figure 2.

I claim:

1. A squeezer for collapsible tubes including a base having a pressed up center provided with a plurality of slots, a slide formed with means extending through said slots and slidingly interlocking with said pressed up center, a clamp carried by said slide and provided with means for gripping the neck of a collapsible tube for holding the tube in a predetermined position at the lower end in respect to said base, a pair of brackets extending from said base at the upper end and a pair of supporting, lifting and squeezing rollers carried by said bracket, said rollers being adapted to engage said tube for squeezing the same and also raising the same.

2. A squeezer for collapsible tubes including a slotted base, a pair of squeezing members, a closure for the tube being squeezed, a clamping member for clamping part of said tube and a slide carrying said clamping member and said closure member, said slide including a plurality of interlocking flanges on one surface and a pair of upstanding ears on the opposite surface, said flanges being adapted to interlock with one side of said base while the ears are adapted to extend beyond the opposite side, means for pivotally mounting said closure on said ears and a spring for giving said closure a continuous tendency to close.

3. A squeezer for collapsible tubes including a base plate having a pair of upstanding ears at one end and a raised portion extending from one end of the base to the other, said raised portion having a pair of parallel slots, a tube squeezing structure carried by said ears, a closure for the tube to be squeezed, a slide having flanges extending through said slots and slidingly interlocking with said raised portion, means for connecting the slide with the tube to be squeezed, said slide having a pair of apertured ears extending away from said base plate, a pintle extending through the ears on the slide and through part of said closure for pivotally mounting the closure on said slide and a spring acting on said slide and on said closure for normally maintaining the closure in a closed position.

THOMAS H. REID.