(No Model.) 2 Sheets—Sheet 1.

W. J. RENO.

TYPE WRITER ATTACHMENT.

No. 590,404. Patented Sept. 21, 1897.

Fig. 1.

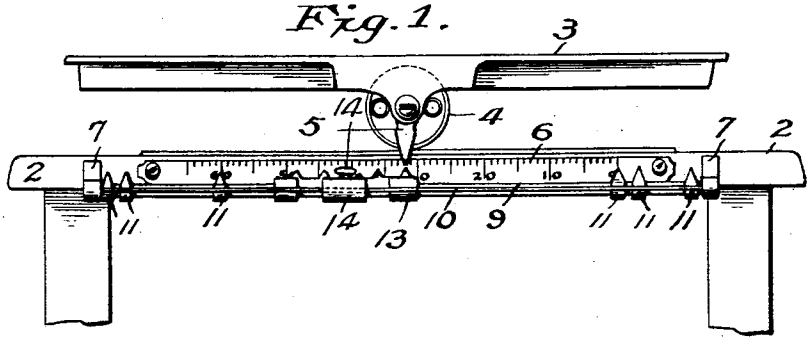

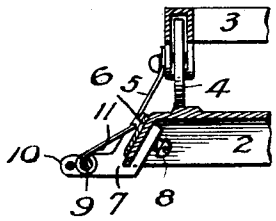

Fig. 3.

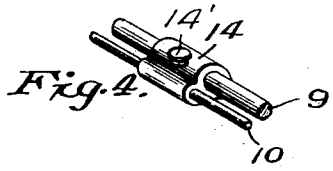

Fig. 4.

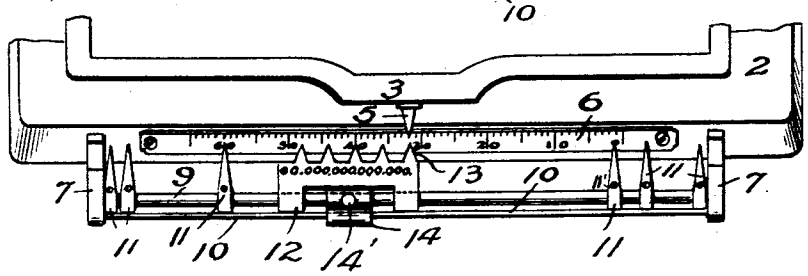

Fig. 2.

Witnesses;
C. E. Van Dorn
Richard Read

Inventor;
William J. Reno
By Paul & Hanley
his Attorneys

THE NORRIS PETERS CO., PHOTO-LITHO., WASHINGTON, D. C.

(No Model.) 2 Sheets—Sheet 2

W. J. RENO.

TYPE WRITER ATTACHMENT.

No. 590,404. Patented Sept. 21, 1897.

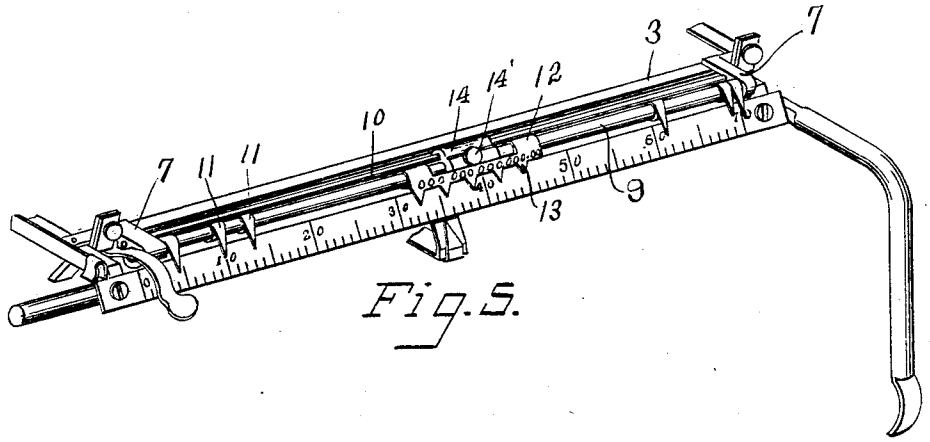

Fig. 5.

Witnesses
B. P. Shepherd
Richard Paul.

Inventor
William J. Reno
By Paul & Hawley
his attorneys

THE NORRIS PETERS CO., PHOTO-LITHO., WASHINGTON, D. C.

UNITED STATES PATENT OFFICE.

WILLIAM J. RENO, OF MINNEAPOLIS, MINNESOTA.

TYPE-WRITER ATTACHMENT.

SPECIFICATION forming part of Letters Patent No. 590,404, dated September 21, 1897.

Application filed April 7, 1896. Serial No. 586,494. (No model.)

To all whom it may concern:

Be it known that I, WILLIAM J. RENO, of the city of Minneapolis, county of Hennepin, State of Minnesota, have invented certain new and useful Improvements in Type-Writer Attachments, of which the following is a specification.

My invention relates to attachments for type-writers, caligraphs, and similar machines; and the object I have in view is to provide a device which will enable the operator of the machine to print invoices of all kinds and tabular statements comprising several columns of figures without the necessity of raising the type-writer carriage during the progress of work.

My invention consists generally in providing an auxiliary scale supported upon the type-writer independently of the main scale and a series of pointers also independently supported, said auxiliary scale and pointers being slidably arranged, the former being provided with a series of characters whereby the proper position in the column of the characters that it is desired to print may be ascertained without raising the type-writer carriage, all as hereinafter described, and particularly pointed out in the claims.

In the accompanying drawings, forming part of this specification, Figure 1 is a view of the front of a type-writer with my invention applied thereto. Fig. 2 is a plan view of the same. Fig. 3 is a sectional view showing the manner of securing the attachment to the type-writer. Fig. 4 is a detail view of the centering device. Fig. 5 is a front view showing the device attached to the type-writer carriage and movable therewith.

In the drawings, 2 represents the frame of a type-writer, 3 the carriage, 4 the wheel arranged to roll upon the frame of the machine near the main scale and supporting the forward end of the carriage, 5 the pointer, and 6 the main scale, all these parts being of the ordinary construction and such as are shown in many type-writers.

To the forward side of the frame 2 I secure my attachment, which comprises the brackets 7, secured to the frame by the set-screw 8, as shown in Fig. 3, and connected by the inner rod 9 and the outer flexible rod 10. Upon the rod 9 I provide a series of movable pointers 11 and an auxiliary scale 12, also arranged to move back and forth upon the rod 9 and provided with a series of pointers 13, extending partially over the main scale 6, there being four spaces on the scale between every two points 13. The auxiliary scale 12 is also provided upon its surface with a series of naughts and periods and is slotted on its forward edge to receive a block 14, slidably arranged upon the rods 9 and 10 and adapted to hold the same parallel. This block is preferably provided with a knob 14'. By means of this block the auxiliary scale 12 may be moved back and forth over the main scale, and as the rod 10 is arranged to bear upon the pointers 11 and the auxiliary scale 12 to prevent the same from being moved by the jar of the machine the block also serves to hold the rod 10 in position and prevent it from sagging and getting out of engagement with the surface of the pointers 11 and the auxiliary scale 12. Each of the small pointers is preferably provided with a cup-shaped recess which is adapted to receive the point of a pencil by which the pointer may be moved.

The rod 10 constitutes a rest for all of the pointers and the auxiliary scale when they are turned back from the main scale so as to leave the latter entirely unobstructed, and this rod also holds the pointers and auxiliary scale away from the keys and type-bars.

In invoicing the auxiliary scale may be used to carry out the totals of extensions by beginning at the right-hand end of the scale and, guided by one of the series of naughts or characters on the surface thereof, printing the extensions in a column for the purpose, and then, guided by a series of naughts or characters to the left of the first series, printing the total of the extensions in a column to the right thereof.

In Fig. 5 I have shown the device attached to a more modern style of type-writer in which the main scale is arranged upon and movable with the type-writer carriage, and the pointer, which in the older style of type-writers is attached to the carriage, is in the new machines fixed to the frame beneath the main scale. When used with this style of type-writer, the auxiliary scale, as shown in the drawings, is supported independently of the main scale by the brackets 7, arranged upon the carriage.

The operation of the device is as follows: Suppose it is desired to print a column of words or numerals under the space marked "10" on the main scale, another column of words under the space "25," and a third under the space "60." One of the pointers 11 is set at each one of these points and the carriage moved so that the pointer 5 will be opposite one of the points 11. The operator having printed the desired figure or character at the three different points indicated by the pointers 11, the carriage may be moved back and the operation repeated without the necessity of raising the carriage to determine the exact position of the figures or characters previously printed, as their position will be indicated by the pointers 11. Any desired number of pointers may be provided, so that the operator may print as many columns as the length of the main scale will permit. The auxiliary scale is of a special value when it is desired to make tabular statements comprising figures from very low to very high denominations. When it is desired to print a column of these characters, the auxiliary scale is moved to the desired point on the rod 9, and if "1,000.00" is to be written the pointer on the carriage is moved directly over the first cipher or figure to the right of the second period on the left-hand end of the auxiliary scale. If the next amount is "1,000,000.00," it will be brought over the first cipher to the right of the third period, and so on. Any number may thus be properly located without raising the carriage, so as to bring them all in the proper relation to one another in the column.

It will be noticed that on the auxiliary scale there is a pointer above and opposite each period and extending partially over the main scale, so that the proper position for the carriage can be easily determined.

The operation of the device when arranged upon the machine in the manner shown in Fig. 5 is substantially the same as that described above.

Having thus described my invention, I claim as new and desire to secure by Letters Patent—

1. The combination, with the type-writer frame and its carriage, of the main scale, a movable auxiliary scale supported independently of said main scale, said auxiliary scale being provided upon its surface with a series of figures or characters and having a series of points extending across the face of said main scale, for the purpose set forth.

2. In a type-writer, the combination with the main scale, of the movable auxiliary scale, the rod whereon said auxiliary scale is movable, means for preventing said auxiliary scale from being moved by the jar of the machine, and a block adapted to engage said auxiliary scale, whereby the latter may be moved back and forth on said rod, for the purpose set forth.

3. The combination, with the type-writer frame and its carriage, of the main scale, the pointers slidably arranged adjacent thereto, and supported independently thereof, and an auxiliary scale provided on its surface with a series of figures or characters, and also slidably arranged and supported independently of said main scale, for the purpose set forth.

4. A type-writer attachment comprising brackets or arms adapted to be secured to the type-writer, a rod or bar connecting said brackets, pointers slidably arranged on said bar, the auxiliary scale, a second rod or wire connecting said brackets and arranged to bear upon the surface of said pointers and on the auxiliary scale, for the purpose set forth.

5. A type-writer attachment comprising a rod or bar, adapted to be supported upon the type-writer, an auxiliary scale slidably arranged upon said bar, said auxiliary scale being provided on its surface with a series of naughts and periods, and being also provided on its edge with a series of points or projections opposite the periods upon the surface of said auxiliary scale, for the purpose set forth.

6. The combination with the type-writer frame and its carriage, of the main scale, the series of pointers slidably arranged adjacent to said scale, said pointers being provided in their surface with a depression, for the purpose set forth.

7. An invoicing attachment for type-writers, comprising an auxiliary scale, supported independently of the main scale and provided upon its surface with a series of naughts or characters arranged in groups representing different denominations of figures, to permit the device to be set opposite the pointer to tabulate a column of figures, and to carry out the extension of the same into another column without moving the auxiliary scale from its original position, substantially as described.

8. The combination, with the type-writer frame and its carriage, one provided with the fixed pointer and the other with the main scale, of the pointers slidable or movable with respect to said scale, the movable auxiliary scale, and means whereby said pointers and said auxiliary scale are together supported independently of said main scale, substantially as described.

In testimony whereof I have hereunto set my hand this 17th day of March, A. D. 1896.

WILLIAM J. RENO.

In presence of—
RICHARD PAUL,
R. C. PAUL.