Oct. 23, 1945. E. D. CHAPPLE 2,387,563

INTERACTION RECORDER

Filed Dec. 29, 1942 4 Sheets-Sheet 1

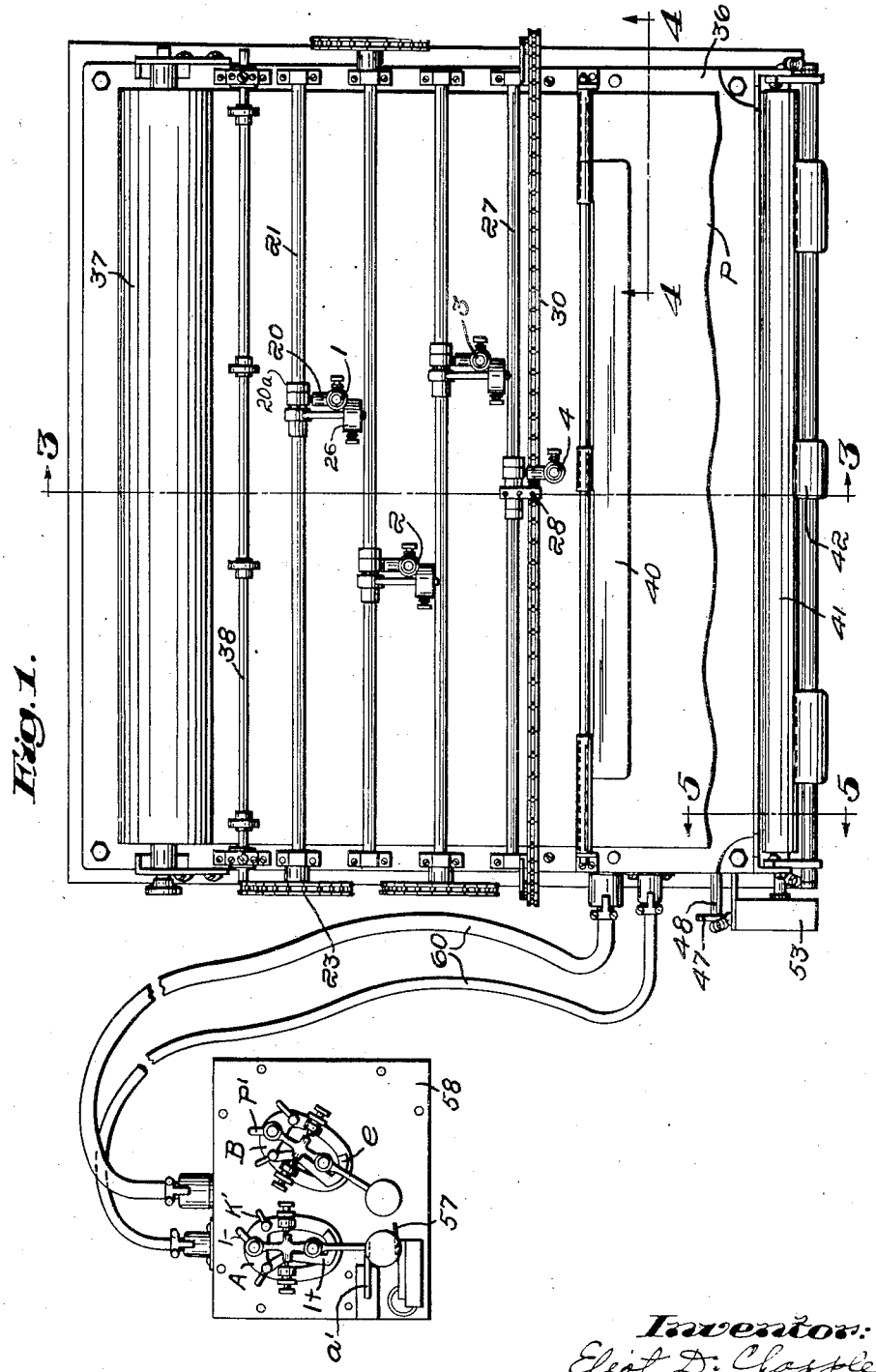

Fig. 1.

Inventor:
Eliot D. Chapple,
by J. H. McCready,
Attorney

Oct. 23, 1945. E. D. CHAPPLE 2,387,563

INTERACTION RECORDER

Filed Dec. 29, 1942 4 Sheets-Sheet 2

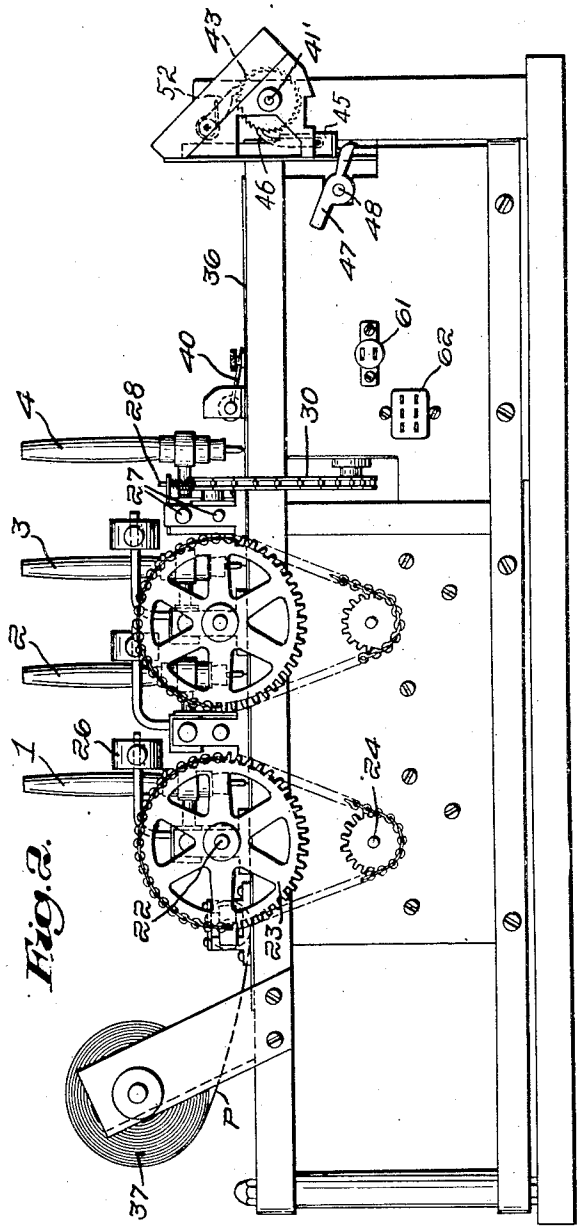

Fig. 2.

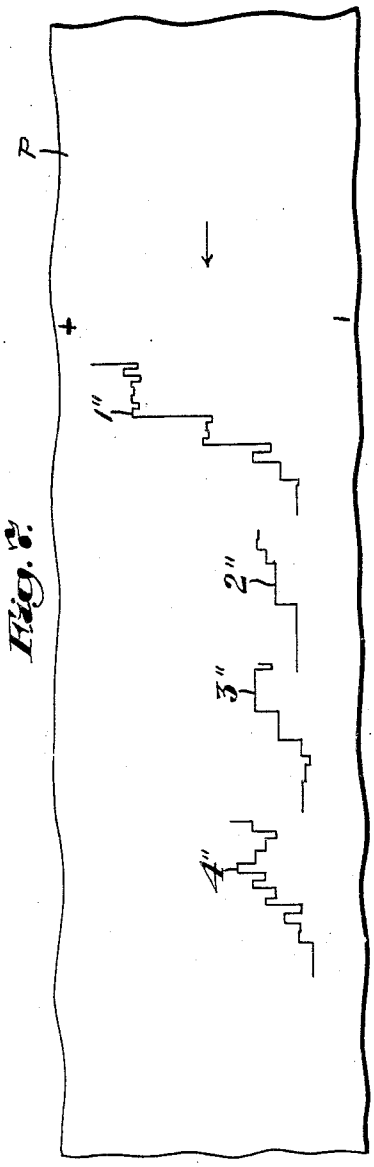

Fig. 3.

Inventor:
Eliot D. Chapple,
by J. H. McCurdy,
Attorney.

Oct. 23, 1945. E. D. CHAPPLE 2,387,563

INTERACTION RECORDER

Filed Dec. 29, 1942 4 Sheets-Sheet 3

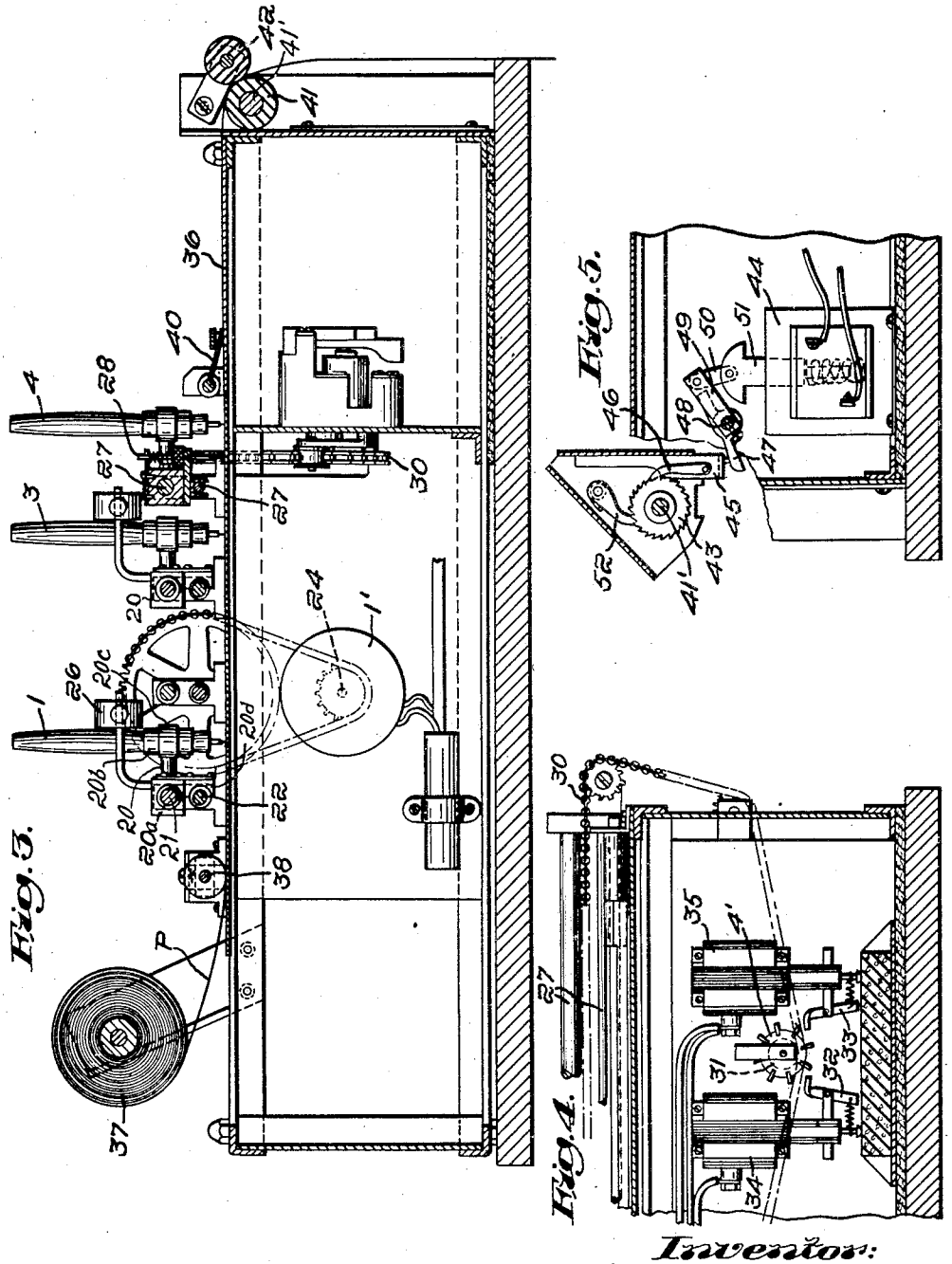

Inventor:
Eliot D. Chapple,
By J. H. McQuade,
Attorney.

Oct. 23, 1945. E. D. CHAPPLE 2,387,563

INTERACTION RECORDER

Filed Dec. 29, 1942 4 Sheets-Sheet 4

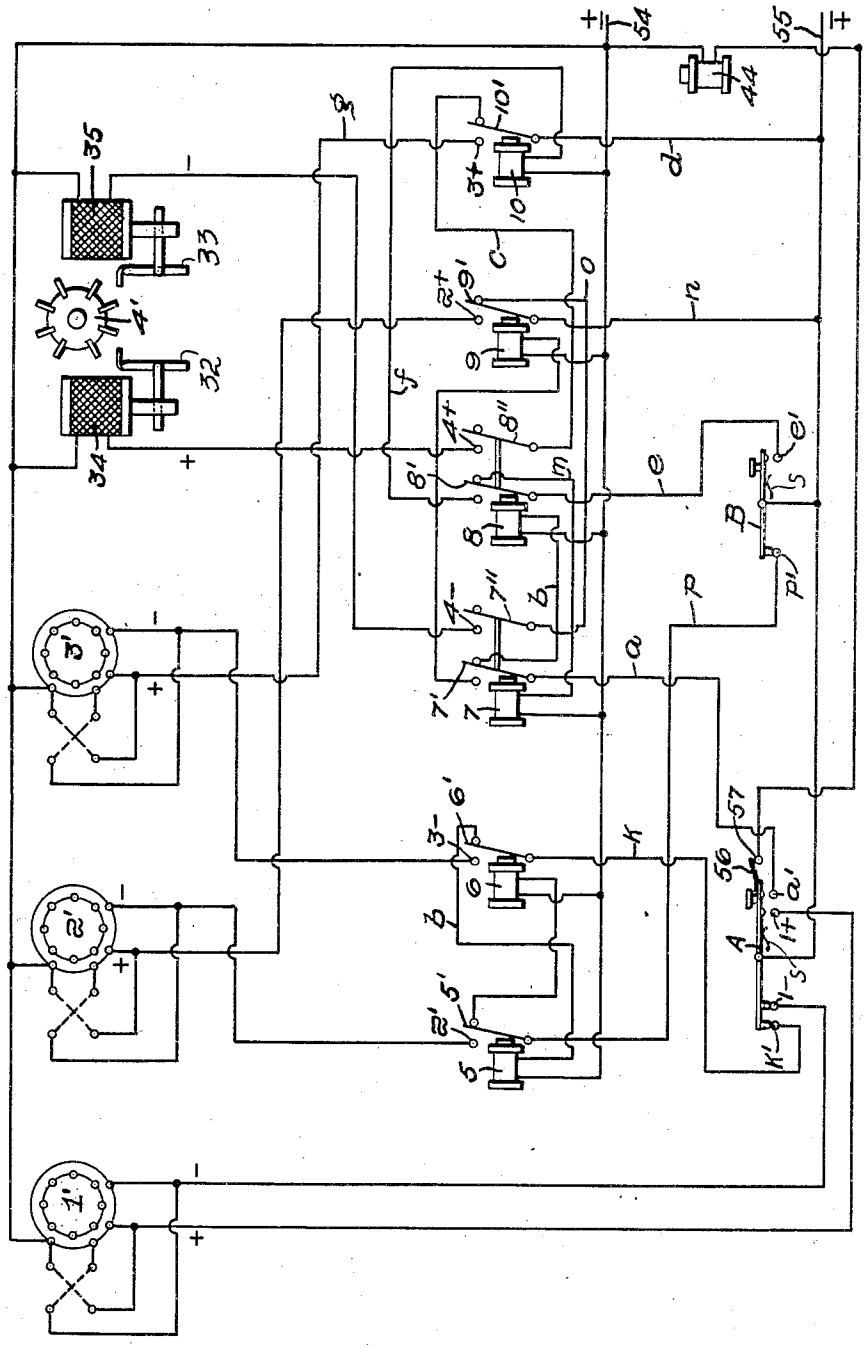

Fig. 6.

Inventor:
Eliot D. Chapple,
by J. H. McCauley,
Attorney.

Patented Oct. 23, 1945

2,387,563

UNITED STATES PATENT OFFICE

2,387,563

INTERACTION RECORDER

Eliot D. Chapple, Belmont, Mass.

Application December 29, 1942, Serial No. 470,477

9 Claims. (Cl. 234—66)

In some fields of research the data gathered, or observations made, are most conveniently presented for examination by the investigator, or those interested in the subject, if they can be recorded in the form of a graph. This is particularly true when these observations take the form of an alternating series, as when they involve the reaction of one person to a series of events produced or controlled by another. Such a situation arises, for example, in connection with some aspects of personnel work, or in making a diagnosis in mental disorders of various types. Collection of the desired data by notes, timing, and memoranda, is not only tedious and time consuming, but it involves the expenditure of much additional time and energy, subsequently to the examination itself, in making calculations or doing other work necessary to present the results of the examination in a readily usable form.

The present invention aims to devise an instrument or machine which can be operated by the physician, observer, or examiner, to indicate, trace, or plot, as the examination or interview progresses, quantitatively those factors in which he is particularly interested, and which will present these results in such visual form that the person conducting the experiment can readily estimate by inspection the general character of the result and can quickly determine the mathematical values, if that is necessary.

The nature of the invention will be readily understood from the following description when read in connection with the accompanying drawings, and the novel features will be particularly pointed out in the appended claims.

In the drawings,

Figure 1 is a plan view of an instrument or machine constructed in accordance with this invention;

Fig. 2 is a side elevation of the machine shown in Fig. 1;

Fig. 3 is a vertical, sectional view taken approximately on the line 3—3, Fig. 1;

Figs. 4 and 5 are additional sectional views taken substantially on the lines 4—4 and 5—5, respectively, of Fig. 1;

Fig. 6 is a wiring diagram of the control mechanism of the machine; and

Fig. 7 is a portion of a graph illustrating the type of record that the machine produces.

Referring first to Figs. 1, 2 and 3, the construction there shown comprises four pens or marking devices of any suitable character, indicated at 1, 2, 3 and 4, respectively. Referring to the pen 1, it will be seen that it is supported in a holder 20 which slides freely on a stationary rod 21 extending horizontally from one side of the machine frame to the other. Immediately below this rod, and lying parallel with it, is a screw-threaded shaft 22 supported in bearings at opposite sides of the machine frame. A sprocket wheel 23 is secured fast to one end of this shaft and is driven by chain and sprocket connections with the shaft 24 of a reversible electric motor 1'. The pen holder 20 includes a slide 20_a, Fig. 3, running on the rod 21, and it carries a follower 20_d having a part running in the groove of the screw thread of the shaft 22. A small weight 26 connected with the slide applies a slight pressure serving to hold the follower constantly in operative engagement with said groove. In addition, the holder 20 includes a tubular piece 20_b in which the pen itself is mounted, this part being supported on a collar 20_c carried by the slide. The slide can be swung in a counter-clockwise direction, Fig. 3, around the rod 21 to tip the pen 1 backwardly out of its operative position, and this swinging movement frees the follower from engagement with the threads of the screw-threaded shaft 22 so that the entire holder and the pen can be adjusted lengthwise of said shaft.

The two pens numbered 2 and 3, respectively, are mounted and driven in the same manner as is the No. 1 pen just described, and the motors which drive the pens are indicated diagrammatically in Fig. 6 by the same numbers as those used for the respective pens, the numbers, however, being primed.

The remaining pen 4 is supported in a holder very similar to that in which the pen 1 is mounted, but it is guided on two smooth-surfaced rods 27—27 extending across the machine. This holder carries a pin 28, projecting into a link of a chain 30, Figs. 1 to 4, which is supported on sprocket wheels at opposite sides of the frame and is driven by another sprocket wheel 31, Fig. 4. Secured to the latter is a ratchet wheel 4', arranged to be operated by two pawls 32 and 33 connected, as shown in Figs. 4 and 6, to the cores of two electromagnets or solenoids 34 and 35, respectively. The mounting of the pawls, as shown in Fig. 4, is such that when the electromagnet 34 is energized, and therefore lifts its core and the pawl mounted on it, the latter will move the ratchet wheel 4' one step in a clockwise direction, the pawl being spring-mounted so that it yields as it descends and thus does not impart a reverse rotative movement to the wheel. When the electromagnet 35 is energized, it operates through similar connections to move the ratchet wheel 4' one tooth in a counter-

clockwise direction. With this mechanism, therefore, the pen 4 is not moved continuously but is operated only step by step as one electromagnet or the other is energized.

Removably supported in the machine frame is a plate or table top 36 across which a web of paper P is fed, this web being unwound from a supply roll 37, led under a guide roll 38, thence passing under the pens and under a gravity hold-down plate 40 into the bite of two feed rolls 41 and 42, the former being driven intermittently and the latter being pivotally supporting and serving merely to press the web of paper continuously against the driven roll. In order to drive the roll 41, its shaft 41' Figs. 2, 3 and 5, has a ratchet wheel 43 secured thereto which is arranged to be operated by connections with an electromagnet 44. As shown, these connections include a slide 45, Fig. 5, carrying a pawl 46 for engaging the ratchet wheel 43, the lower end of the slide resting on a lever 47, Figs. 2 and 5 adjustably secured to a rock shaft 48, supported in a part of the frame of the apparatus. An arm 49, Fig. 5 also secured to this rock shaft, is connected by a link 50 to the plunger 51 of the electromagnet 44. A spring normally holds this plunger or core in an elevated position, but when the electromagnet is energized it pulls the core down, thus operating through the connections just described to lift the slide 45 and so to impart a rotative movement to the ratchet wheel 43 and the rubber-surfaced feed roll 41 for the paper. A holding dog 52 holds the ratchet wheel against reverse rotation. Also, the roll carries a hand wheel 53, Fig. 1, by means of which it may be operated manually.

The motors and solenoids, or electromagnets, (which with the switch or switches that they operate usually are referred to as "relays") above described, are all inter-connected into a common control circuit, illustrated in Fig. 6, in such a manner that the pens may be operated selectively and in certain combinations, and the paper feed will take place incidentally to these operations and in the desired time relationship to them. The operation of the entire apparatus is governed by two control switches, preferably of a form very similar to telegraph keys, as indicated at A and B, respectively, in Figs. 1 and 6. It will be observed that both are connected at their fulcrum points to one side of an alternating current supply line, the conductors of which are shown at 54 and 55, and that all of the motors and the electromagnets are permanently connected to the other side of this supply line. Between these various motive power units and the control keys A and B, are several electromagnetic switches or relays indicated at 5, 6, 7, 8, 9 and 10, respectively, and one terminal of each of these electromagnets is permanently connected with the side of the supply line opposite to that to which the keys A and B are permanently connected. Each relay includes one or more pivoted switch arms normally held away from the relay magnet by a spring.

Movements of the pens toward the left, Fig. 1, are regarded as positive movements, while those in the opposite direction are considered as negative. These directions are indicated by the plus and minus signs in Fig. 7. For convenience in reading the diagram shown in Fig. 7, and understanding the operations which take place upon movements of the keys A or B into different positions, the conductors which carry current to the motors that drive the pens, have associated with them plus and minus signs to indicate the direction of movement of the motors and, consequently of the pens, which takes place when current flows through any one of these conductors. Also, the switch contacts to which these respective conductors run, are designated by the number of the pen driven by that motor and a plus or minus sign indicating the direction in which the pen will be moved when that particular contact is alive.

It should be understood that both keys A and B are normally held in the position illustrated in Fig. 6 by springs S—S, Fig. 6, and that this position is regarded as the "up" position of the key, and that when the button on the key is depressed it "closes" the key or moves it into its depressed or "down" position. Thus contact 1— of key A is always alive through the key when the latter is in its "up" or normal position and, consequently, if the line switch at this time is closed, the No. 1 pen will be driven by its motor in a negative direction. Likewise, when this key is depressed, contact 1— becomes dead, the 1+ contact and its conductor are made alive, and the direction of pen No. 1 is reversed. Also, this key A is used in operating all of the other motors, including that indicated at 4', but whether or not these motors are operated, and the direction in which they are operated, depends, also, upon the position of key B. In other words, the two keys cooperate in controlling the movements of all of the pens, except pen No. 1. Or, to state the matter somewhat differently, pen No. 1 operates entirely independently of the others in the sense that it does not depend for its actuation upon the position of key B. In using the machine, as for example to examine a patient, the key A is for the patient and key B is for the physician.

Starting with the parts in the relationship illustrated in Fig. 6, it will be observed that if key A is depressed to close contact 1, while key B is left up, then pen No. 1 will begin to move in a positive direction. At the same time that A is depressed, the flexible contact 56 is pushed into engagement momentarily with its cooperating contact 57 and snaps past it, thus closing and then opening the circuit through the electromagnet 44, which operates the paper feed, and moving the web of paper one step. At the same time contact *a'* is closed and current also flows through conductor *a*; switch 7', conductor *b* through the relay magnet 8, thus swinging switches 8' and 8'' to the left. The latter switch is alive at this time through conductors *c* and *d* and switch 10', so that the closing of switch 8'' energizes the magnet 34 and results in moving pen No. 4 one step in a positive direction. Nothing else happens at this time, and pen No. 1 continues to move in a positive direction.

If, now, key B is depressed, while holding key A down, then pen No. 3 starts to move in a positive direction because current flows from key B through conductor *e*, switch 8', and conductor *f* to relay 10, thus swinging the switch 10' to the left and delivering current to conductor *g* leading to the motor for pen No. 3, it being remembered that switch arm 8' is now held in its left-hand position, due to the fact that key A is down.

Both keys are now down, and there are two possibilities for a third position. Either A or B can be released. If A is released, then the direction of pen No. 1 will be reversed. At the same time switch 8' is swung back to the right, due to the fact that conductor *a* is now dead, so that the

depression of key B causes current to flow through conductor *e*, switch 8', conductor *m* and through solenoid 7, energizing the latter and swinging switch 7'' to the left and into engagement with contact 4—. The switch 7'' is alive at this time through conductors *n* and *o* and switch 9', so that current then flows through solenoid 35 and operates pen No. 4 one step in a minus direction.

If, however, instead of releasing key A, key B is released, then the positive motion of pen No. 1 continues. Because conductors *e*, *m* and *f* now become dead, the motion of pen No. 3 is stopped, electromagnet 7 becomes deenergized, its switch 7' is swung into its normal position away from the magnet core by the spring associated with it, thereby sending current through conductor *b* to electromagnet 8, and swinging switch arm 8'', into engagement with the contact 4+. This switch at this time is alive through conductors *c*, *d* and switch arm 10' so that solenoid 34 is again energized, thus moving pen No. 4 one step in a positive direction.

The operations just described are indicated in the top line of the chart below, except for the first kick of the solenoid 34, which is omitted because the first position indicated is intended to show the operation actually taking place with the position of the two keys as there indicated. The second position indicates a change made in the first position, and the third position indicates either of the two possible changes which may be made in the second position and the result thereof. This chart or table shows the various ways in which the different pens may be brought into operation, selectively moved in the desired direction, and continued in operation for the desired periods of time.

First position	Second position	Third position
A down, B up (1+)	B down (3+)	A up (4— and 1—) or B up (4+ and 1+).
B down, A up (1—)	A down (2+ and 1+)	A up (4— and 1—) or B up (4+ and 1+).
A down, B up (1+)	A up (3— and 1—)	A down (4+ and 1+) or B down (4— and 1—)
B down, A up (1—)	B up (2—)	A down (1+ and 4+) or B down (4— and 1—).

It will be evident from the foregoing and from the wiring diagram that pen No. 1 is operated exclusively by key A, but that the actions of the other three pens are dependent upon the mutual inter-relations of the two keys. It will also be observed that the pens numbered 2 and 3 are actuated only when the two keys are in the same positions—that is, these pens are both driven positively when both keys are down and negatively when both keys are up. Pen No. 4, however, which is moved only a step at a time, depends for its action upon which key changes its position after the two keys are either down or up. Thus the movement of pen No. 4 is delayed until such a change has occurred. This is true because this pen is only actuated in a positive direction upon the closing of the switch 8'' at a time when the conductor *c* is alive, and it is only moved in a negative direction upon the closing of the switch 7'' at a time when conductor *o* is alive, as will be evident from an inspection of Fig. 6.

It is believed that the operations above indicated on the table will be evident from the foregoing without further tracing of the circuits in detail, it being remembered that while the operation of the keys is entirely manual, the resulting movements of the pens so initiated take place automatically in different but predetermined combinations, depending upon the sequence in which the control switches or keys are operated.

In a typical use of the machine in examining a patient as, for instance, one showing symptoms of some psychosomatic disorder, the physician may conduct the examination, operating the key A for the patient's reactions and the key B for his own questions. Or, the physician may simply talk with the patient and the instrument may be operated in an adjoining room by an assistant who can hear the conversation plainly. The pens are first adjusted into their middle positions by tipping the holders backward sufficiently to release the follower and then sliding the carriages along the bars. As the machine operates it produces a series of curves, somewhat as indicated in Fig. 7, the curves made by the different pens 1 to 4, inclusive, being indicated by the corresponding, but double-primed, numerals. The first curve 1'', which may aptly be called the "activity" curve, indicates the patient's actions, minus his silences or inactions. The second curve 2'' represents the patient's interruptions of the physician, minus his failures to respond to the latter, and is customarily referred to as the patient's "adjustment" curve. The third curve 3'' gives a measure of the adjustment of the physician, and shows his interruptions of the patient, minus his failures to respond to the patient. The fourth curve 4'' is referred to as the "initiative" curve and consists of a numerical count of the patient's continuations of action after an interruption by the physician, plus his initiation of action after both have become silent (these being positive elements) but minus the physician's continuations and initiations of action. In each case the actions of either individual are positive and the silences negative. Because the first three pens move continuously while action or silence continues after one being initiated, and their motion is stopped only upon a break in action or silence, the machine automatically integrates or sums up the positive and negative factors in each of the curves that it makes. Consequently, the net result on each curve may be readily measured from the starting point, or may be read directly, if the web of paper is suitably ruled for this purpose.

All of the horizontal or transverse lines in the curves are made by the motion of the pens when they are being driven by their motors. The vertical lines or those extending lengthwise of the web are produced by the intermittent feeding movements of the web which occur each time that the key A passes through its neutral position in moving either up or down.

When the examination has been completed, the section of web containing the curves may be torn off and becomes a part of the patient's record.

As shown in Figs. 1 and 2, the control switches are mounted on a table or base 58, which is independent of the main body of the machine, and the two are connected by a cord or cords 60 containing the necessary conductors to connect the

control unit with the operating mechanism, the cords being equipped with suitable plugs, and leads from the various electrical elements of each unit being brought to sockets, such as those indicated at 61 and 62, respectively, Fig. 2, to facilitate the connection and disconnection of the switch unit to and from the operating unit. This is of advantage in contributing to the portability of the apparatus and it also makes it possible for the physician or examiner to use the keys during an interview at a remote point from the operating unit where it would be less likely to distract the attention of the patient or other person being interviewed.

In addition to the uses above referred to in the medical profession, the instrument also finds a wide-spread application in the personnel field where it is frequently important to obtain an objective record of the ability of an individual to fit into a work situation, to adjust to others in an organization, or where the efficiency of an enterprise may depend upon being able to estimate the capacity of individuals for initiative, their speed of team work, and other personal characteristics which can be measured by this machine. These and other applications of the machine have been demonstrated in its actual use in practice.

While I have herein shown and described the embodiment of the invention at present preferred, it will be evident that the invention may be embodied in other forms, and that various changes in it will necessarily be made to suit the requirements of special cases and individual situations, while still retaining one or more of the novel features of the invention.

Having thus described my invention, what I desire to claim as new is:

1. An interaction recorder comprising a series of markers, means supporting a web of paper in cooperative relationship to said markers, mechanism for feeding said web past said markers but in recording relationship thereto, said markers being adapted to cooperate with said web of paper in indicating a series of values, power driven mechanism for operating said markers to record values on said web of paper, electric controlling apparatus for said mechanism operable to start, stop and reverse the motion of said markers, selectively, said controlling apparatus comprising a control circuit including a plurality of relays, interconnections between said relays, and two manually operable control switches connected into said circuit with said relays, the circuit and said interconnections being constructed and organized to bring said markers into action in different but predetermined combinations, depending upon the sequence in which said control switches are operated.

2. An interaction recorder comprising a series of pens, power-driven means for moving said pens backward and forward across the surface of a web of paper, mechanism for feeding said web at right angles to the direction of movement of said pens, electrical controlling apparatus for said means operable to stop, start and reverse the motion of said pens selectively, said controlling apparatus comprising a control circuit including a plurality of relays, interconnections between the relays, and two manually operable control switches connected into said circuit with said relays, the circuit and said interconnections being constructed and organized to bring said pens into action in different but predetermined combinations depending upon the sequence in which said control switches are operated.

3. An interaction recorder according to preceding claim 1, in which each of said switches has two operative positions in each of which it controls the movement of one or more of said markers.

4. An interaction recorder according to preceding claim 1, in which one of said markers is controlled exclusively by one of said switches while other markers are controlled by the sequence of operation of the two switches.

5. An interaction recorder according to preceding claim 1, in which each of said switches has two operative positions and said controlling apparatus includes means for operating said web feeding mechanism as one of said switches is moved from either of its operative positions to the other.

6. An interaction recorder according to preceding claim 2, in which said pen feeding means is constructed to feed certain of said pens continuously when their feeding movement has been initiated until one of said control switches is again operated, and the means for operating another of said pens moves it only a predetermined and fixed distance upon each actuation thereof by one of the control switches.

7. An interaction recorder comprising a series of four pens, power driven means for moving said pens backward and forward across the surface of a web of paper, mechanism for feeding said web at right angles to the direction of travel of said pens, electrical controlling apparatus for said means operable to start, stop and reverse the motion of said pens selectively, said controlling apparatus comprising a control circuit including two manually operable control switches, a plurality of relays, and interconnections between said relays, said controlling apparatus being organized to place all of said pens under the control of said switches and to produce movements of said pens in different but predetermined combinations depending upon the sequence in which said switches are operated.

8. An interaction recorder according to preceding claim 7, in which one of said pens is controlled solely by one of said switches, but the operation of other pens is controlled by the mutual interrelation of the two switches.

9. An interaction recorder according to preceding claim 7, in which three of said pens are moved continuously when started until stopped or reversed by the operation of one of said control switches but the fourth pen is operated one step only when either control switch changes its position after both switches have been in similar operative positions.

ELIOT D. CHAPPLE.