United States Patent [19]

Brown et al.

[11] **3,826,986**

[45] **July 30, 1974**

[54] **REMOTE CONTROL ADAPTER**

[75] Inventors: **Gene T. Brown,** Orlando; **John V. Whiting,** Altamonte Springs, both of Fla.

[73] Assignee: **Scope Incorporated,** Reston, Va.

[22] Filed: **Aug. 17, 1972**

[21] Appl. No.: **271,779**

[52] **U.S. Cl.** ..... **325/16,** 179/1 PC, 339/8

[51] **Int. Cl.** **H04b 1/38**

[58] **Field of Search** ..... 179/1 PC; 325/16, 21, 23; 339/8, 19, 41, 42, 89, 91, 204, 205, 242, 244, 249, 252, 259

[56] **References Cited**

UNITED STATES PATENTS

3,617,985 11/1971 Kehl 325/16

Primary Examiner—Albert J. Mayer

Attorney, Agent, or Firm—John E. Benoit

[57] **ABSTRACT**

An adapter for use in a two-way radio wherein the antenna of the radio is removable from the housing of the radio. A well extends from the point of the antenna connection to within the housing and includes a plurality of normally closed switches relating to the radio circuitry. An elongated plug is rotatably insertable into the well and, upon insertion, the plug is of a dimension so as to bear against and open the normally closed switches within the well. A plurality of contacts mounted along the plug are located so as to mate with associated terminals of the now open switches when the plug is rotated within the housing. A cable is connected to the outer end of the plug and has a plurality of electrical leads connected to the various contacts on the plug. The cable extends outwardly from the radio housing and, therefore, provides a means for connecting the control of the radio to some remote control device.

6 Claims, 13 Drawing Figures

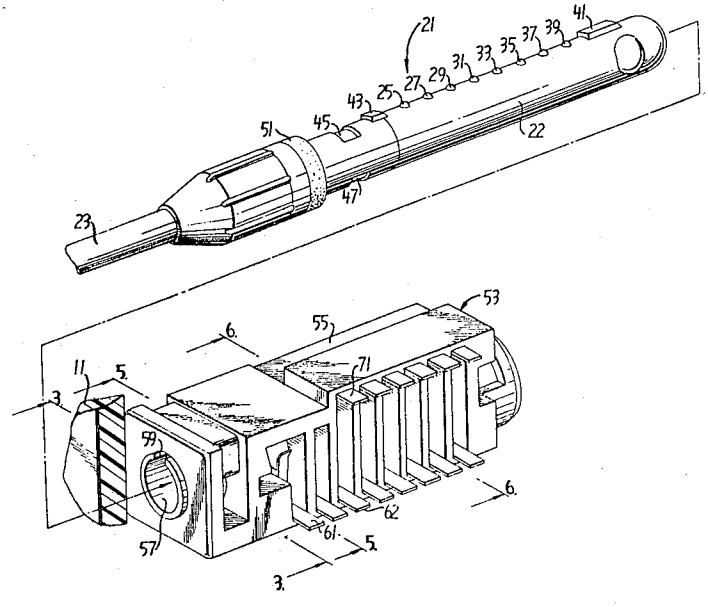

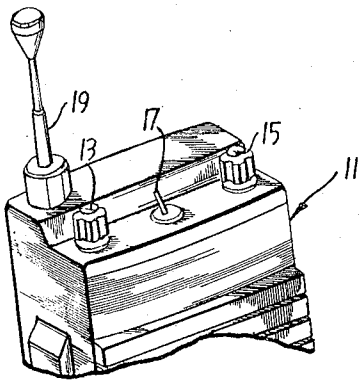

FIG. 1

FIG. 13

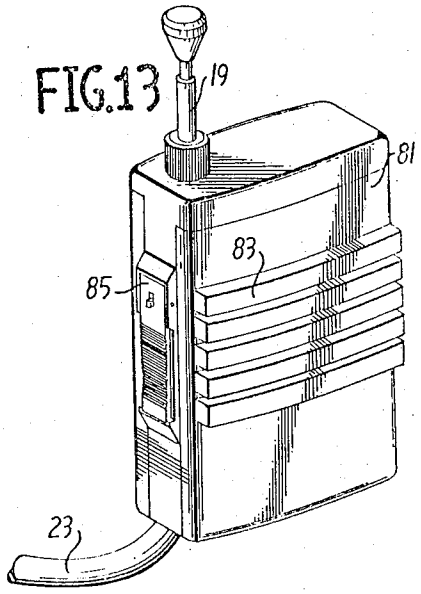

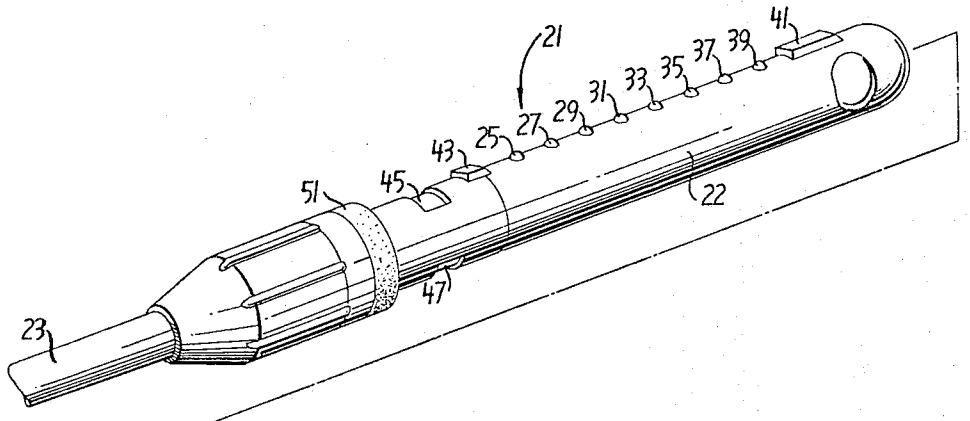

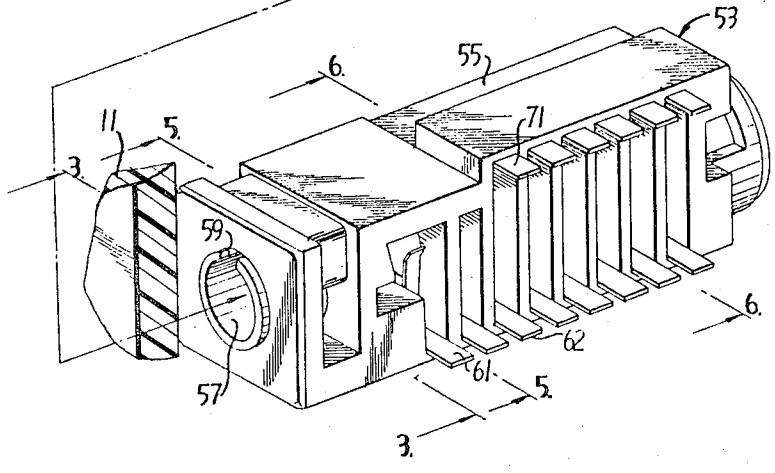

FIG. 2

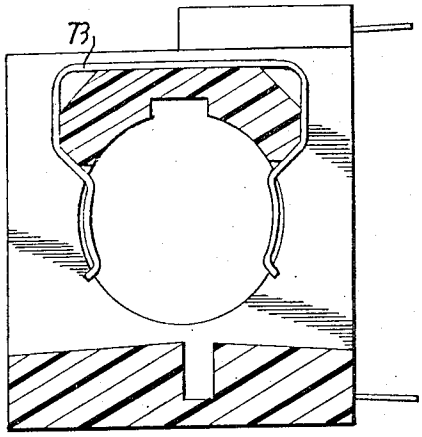

FIG. 3

FIG. 4

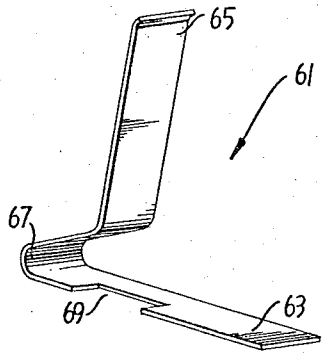

FIG. 5

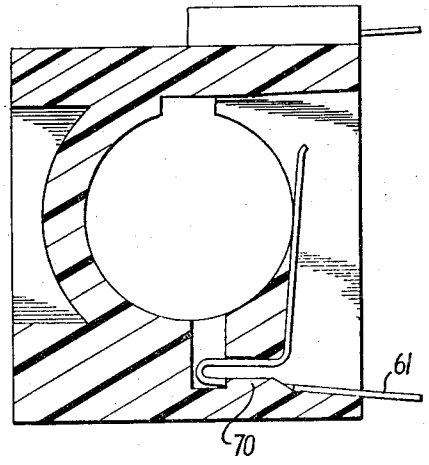

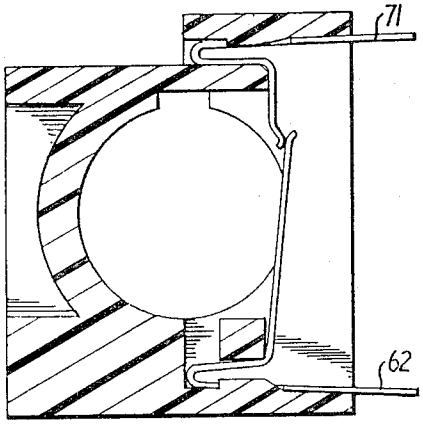

FIG. 6

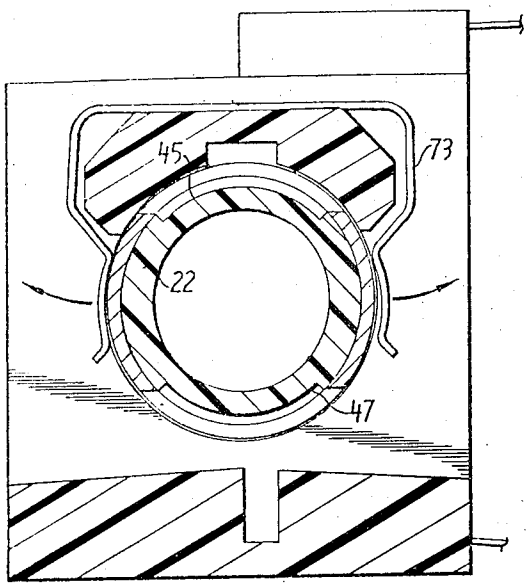

FIG. 7

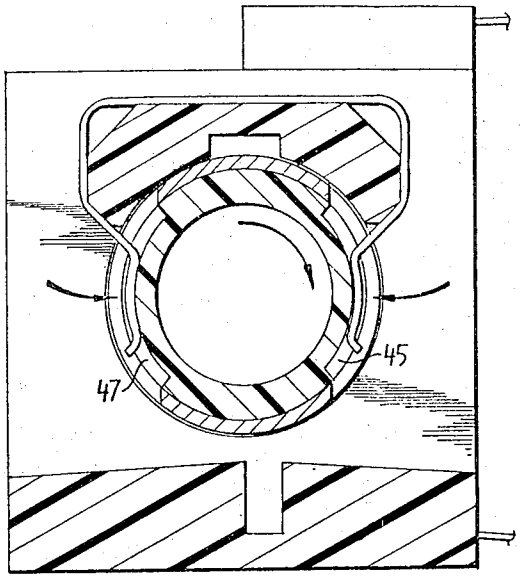

FIG. 8

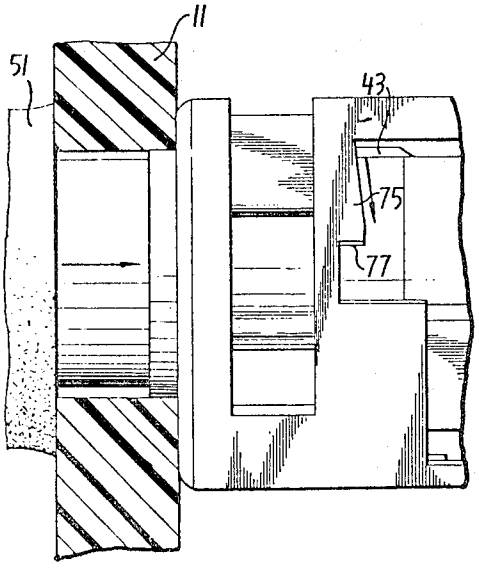

FIG. 9

FIG. 10

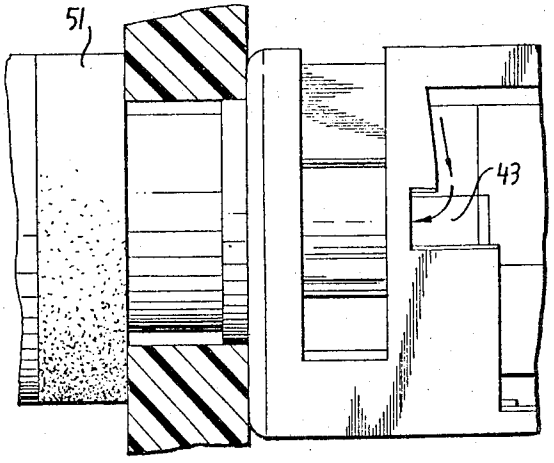

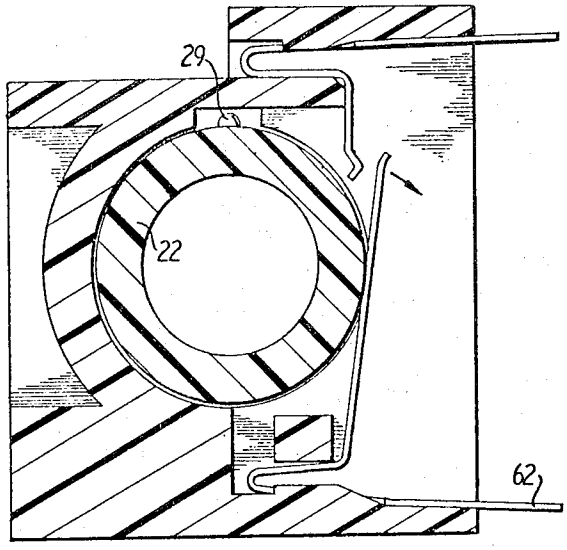

FIG. 11

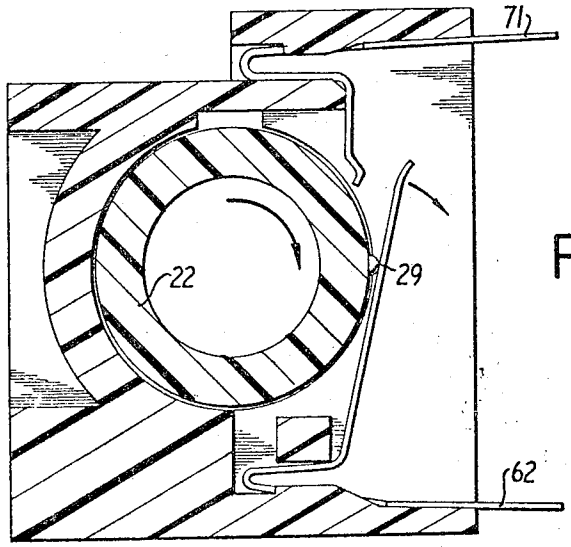

FIG. 12

REMOTE CONTROL ADAPTER

This invention relates generally to two-way radio equipment and more specifically to an adapter for such equipment which provides remote control thereof.

The use of two-way radios, commonly known as a "walky-talky" has increased tremendously over the past years and is used extensively, not only by individuals in an amateur capacity but even more so by official groups such as policemen, firemen, etc.

The normal unit which is used is a hand carried unit in which all of the controls for listen, talk, volume, squelch, etc. are all included in the one hand held unit. There is normally a provision whereby the unit may also be carried on the person when it is not in use.

There has developed an increasing demand for a unit which does not tie up one of the user's hands at all times. This is accomplished by mounting an auxiliary unit on the wearer near the head and mouth so that while one hand is used to operate the push-to-talk switch, the user's hand is not totally used at all times. The advantages are obvious, particularly in the case of a policemen or any person who is operating equipment which requires the use of both hands most of the time.

Accordingly, it is an object of the present invention to provide an adapter which may be inserted into a standard two-way radio so that a cable extending from the plug may be connected to some remotely operated device.

Another object of the invention is to provide such an adapter which may be inserted into a well associated with a removable antenna.

Yet another object of the invention is to provide an adapter and well assembly for a two-way radio which automatically opens standard control circuits for the hand held radio and makes contact with the adapter to transfer these control functions to a remote unit.

These and other objects of the invention will become obvious from the following description taken in conjunction with the drawings wherein

FIG. **1** is a partial sectional view of a housing for a two-way radio;

FIG. **2** is an exploded view of the plug and well assembly of the present invention;

FIG. **3** is a sectional view taken along the lines **3—3** of FIG. **2**;

FIG. **4** is a perspective view of one of the spring clips used within the well;

FIG. **5** is a sectional view taken along lines **5—5** of FIG. **2**;

FIG. **6** is a sectional view taken along lines **6—6** of FIG. **2**;

FIG. **7** is a sectional view similar to FIG. **3** with the plug assembly inserted into the well;

FIG. **8** is a sectional view similar to FIG. **7** with the plug rotated and locked in place;

FIG. **9** is a view of the interior of the plug assembly showing the locking mechanism;

FIG. **10** is a view similar to FIG. **9** after the plug assembly has been rotated to a locking position;

FIGS. **11** and **12** are sectional views similar to FIG. **6** with the plug inserted in the well and subsequently rotated; and

FIG. **13** is a perspective view of one type of housing which may be used for the remote control device.

Broadly speaking, the present invention comprises an adapter for use in a two-way radio wherein the antenna of the radio is removable from the housing of the radio. A well extends from the point of the antenna connection to within the housing and includes a plurality of normally closed switches relating to the radio circuitry. An elongated plug is rotatably insertable into the well and, upon insertion, the plug is of a dimension so as to bear against and open the normally closed switches within the well. A plurality of contacts mounted along the plug are located so as to mate with associated terminals of the now open switches when the plug is rotated within the housing. A cable is connected to the outer end of the plug and has a plurality of electrical leads connected to the various contacts on the plug. The cable extends outwardly from the radio housing and, therefore, provides a means for connecting the control of the radio to some remote control device.

Turning now more specifically to the drawings, there is shown in FIG. **1** a housing **11** for a two-way radio having a standard volume button **13** and a squelch button **15.** Additionally, there is provided an ON-OFF switch **17** and an antenna **19** which, in the present instance, is removable from the housing.

FIG. **2** is an exploded view of the two elements of the present invention. An elongated plug **21** having a cylindrical body **22** is secured to the end of a multilead cable **23.** The various leads within cable **23** are connected to a series of electrical contacts **25, 27, 29, 31, 33, 35, 37** and **39.**

There is also included on the cylindrical body **22** of the plug **21** a key **41** the purpose of which will become apparent as the description proceeds.

There are also included on the cylindrical body **22,** a locking element **43** and two grooved portions **45** and **47.**

The cable end of the plug is of a dimension slightly greater than the cylindrical body **22** and terminates with a shoulder of a resilient material which forms a gasket member **51.**

The housing of the well assembly is included within the radio as indicated by the cut-away section **11** of the radio housing. The antenna well **57** is provided with an upper slot **59** which serves as a guide for the key **41** when the plug is being inserted into the well.

Also mounted within the housing are a series of lower terminal members **61** and **62** to which lead wires may be connected. Associated with these terminals are a series of upper spring terminals **71** which will be discussed in more detail as the description proceeds.

Turning now to the various sectional views, there is shown in FIG. **3** a sectional view taken along the lines **3—3** of FIG. **2.** Mounted within the housing at this point is a U-shaped spring clip **73** which is shown in FIG. **3** in the position wherein the plug has not been inserted into the well assembly.

FIG. **4** shows a lower spring terminal **61** in a perspective view. This spring terminal includes the lower or base portion **63** and the upper extending arm **65.** As will be apparent, a sharp U bend **67** is formed in the spring terminal **61** together with a notch **69.**

The spring clip **61** is shown as it is insertably mounted within the switch assembly in FIG. **5.** The housing itself has an extending projection **70** which is approximately of the same cross-sectional dimension as the slot **69** in the spring terminal **61.** With this configuration, the U-shaped bend **67** of the spring terminal **61** is passed over the projection **70** and is compressed between that projection and the opposed part of the casing so as to

cause a permanent compression of the spring terminal member. As soon as the slot **69** passes over the projection **70**, it will drop into place and therefore be permanently mounted within the housing itself. All of the lower terminals are made in this fashion and are mounted in this fashion. Additionally, the upper terminals are similarly mounted and similarly constructed except for the contact end as shown in FIG. **6**.

FIG. **6** shows the switch, which comprises the lower spring terminal **62** and the upper spring terminal **71**, in its normally closed position wherein the plug has not been inserted into the well. Under these conditions the two-way radio operates in a normal fashion being entirely controlled by the units that extend exteriorly from the housing of the radio.

FIGS. **7** through **12** illustrate the operation of the present invention when the plug is inserted within the well and rotated.

The cylindrical body **22** of the plug is shown as inserted within the antenna well in FIG. **7** which is similar to the sectional view shown in FIG. **3**. As the plug is inserted in the well, the cylindrical body **22** is of a sufficient dimension to press the lower parts of the U-shaped spring outwardly. When the plug is then rotated, the grooves **45** and **47** mate with the arms of the U-shaped spring and allow it to close and abut against the grooves, as illustrated in FIG. **8**, thereby stabilizing the plug in position within the well.

FIGS. **9** and **10** relate to the locking means for the plug and well assembly. When the plug is inserted into the well, the outer compressible gasket **51** is of a sufficient diameter so as to extend beyond the well hole and abut against the radio casing **11**. Within the well assembly there is a projecting ramp **25** which terminates in a vertical face **77**. As the plug is rotated within the well, the locking element **43** rides upwardly on the ramp **75** and as it does so it causes compression of gasket **51**. When the locking element passes the vertical face **77**, the action of the gasket will cause the element **43** to snap into position behind the vertical face as shown in FIG. **10**. This securely locks the plug within the well assembly, and it can only be removed by forcibly compressing gasket **51** and rotating the plug in a counterclockwise direction so as to bring the locking element **43** into the position whereby the plug may be removed.

FIGS. **11** and **12** illustrate the operation of the various switches and contacts. In FIG. **11** the plug is shown inserted with the cylindrical body having a sufficient diameter so as to bear against the end of the lower spring terminal **62** and force it away from contact with the upper terminal **71**. This opens various circuits within the radio which are normally controlled by the external control devices on the radio housing.

As the cylindrical body is rotated, clockwise the various contact terminals such as **29** will connect with their associated spring terminal such as terminal **62** so as to connect the plurality of leads within the cable to the various circuits which had been previously controlled by the control elements on the main body of the radio.

FIG. **13** illustrates generally a small remote unit which may be attached to the clothing of the wearer near his upper torso so that it is convenient with relationship to his mouth. No particular attachment means are shown since various devices such as clips, etc. could be used. The housing **81** includes the speaker/microphone unit **83**, a push-to-talk button **85** and the antenna **19**. As a matter of practical convenience, the antenna can be the same one that was removed from the major part of the radio shown in FIG. **1**. In such a situation it would merely require that the upper part of the casing include a well assembly similar to that shown in FIG. **2** having only the first two spring terminals **61**.

In this connection, the two terminals shown as **61** and the one immediately following it have no associated upper spring terminals. This is due to the fact that these are direct antenna connections and therefore there is no need to break contact with the control circuits as is required in the other switch members.

The advantages of the present device has been discussed hereinabove and are primarily related to freeing the hands of the user so that he does not have to manually hold the large radio unit at all times. The main unit would normally be attached to his belt and the remote unit would be secured to his clothing at a convenient place on his upper torso as described above.

In the use as particularly shown, and with the number of terminals indicated, the following functions are transferred from the main radio to the external remote unit.

The external speaker of the main radio is disabled and the audio signal is brought out so that it can drive the speaker in the remote control unit.

The microphone in the radio is disabled and the microphone in the external unit is enabled.

The RF power output is transferred to the cable which in turn is connected to the antenna on the remote control unit.

The normal three push-to-talk functions in the main radio are disabled and are transferred by means of the cable to the same control within the remote unit.

The above description and associated drawings are illustrative only. Various individual components could be modified and substitutions made therefor without departing from the invention as set forth. Accordingly, the invention is to be limited only by the scope of the following claims.

We claim:

1. An adapter for use with remote control of a two-way radio including a housing, said adapter comprising

an antenna removably secured to said housing,

a well extending from said antenna into the interior of said housing,

a plurality of normally closed spring contact switches within said well,

an elongated plug adapted to rotatably fit within said well, said plug being of a dimension so as to bias said spring contact switches into an open position when said plug is inserted into said well,

a plurality of electrical contacts mounted longitudinally along said plug and extending outwardly therefrom, said plugs mating with one terminal of said switches when said plug is rotated, and

cable means having a plurality of conductors connected to said contacts and extending outwardly of said housing for connection to a remote control device.

2. The adapter of claim **1** further comprising

antenna contact means within said well, said antenna contact means being connectable to said antenna when secured within said housing, and

further contacts mounted on said plug for connection with said antenna contacts when said plug is inserted into said well.

3. The adapter of claim **1** further comprising

longitudinal slots in said well,

keying means on said plug for mating with said longitudinal slots so as to properly orient said plug for insertion into said well.

4. The adapter of claim 1 further comprising means for locking said plug within said well.

5. The adapter of claim 1 further comprising means for stabilizing said plug with said well.

6. An adapter for use with remote control of a two-way radio including a housing, said adapter comprising

a removable antenna secured to said housing,

a well extending from said antenna within said housing,

a plurality of normally closed switches within said housing,

an elongated plug adapted to rotatably fit within said well, said plug being of a dimension so as to bear against and open said switches when inserted into said well,

a plurality of contacts mounted along said plug, said contacts mating with associated terminals of said switch when said plug is rotated, and

cable means having a plurality of conductors connected to said contacts, said cable means extending outwardly of said housing so as to be connectable to a remote control means.

* * * * *