(19) DANMARK

(10) DK/EP 2863506 T3

(12) Oversættelse af europæisk patentskrift

Patent- og Varemærkestyrelsen

(51) Int.Cl.: *H 02 G 15/013 (2006.01)* *H 02 G 3/22 (2006.01)*

(45) Oversættelsen bekendtgjort den: **2019-07-01**

(80) Dato for Den Europæiske Patentmyndigheds bekendtgørelse om meddelelse af patentet: **2019-06-19**

(86) Europæisk ansøgning nr.: **14002919.0**

(86) Europæisk indleveringsdag: **2014-08-22**

(87) Den europæiske ansøgnings publiceringsdag: **2015-04-22**

(30) Prioritet: **2013-10-18 DE 102013017434**

(84) Designerede stater: **AL AT BE BG CH CY CZ DE DK EE ES FI FR GB GR HR HU IE IS IT LI LT LU LV MC MK MT NL NO PL PT RO RS SE SI SK SM TR**

(73) Patenthaver: **gabo Systemtechnik GmbH, Am Schaidweg 7, 94559 Niederwinkling, Tyskland**

(72) Opfinder: **Geiger, Alexander, Birkenweg 3, 94559 Niederwinkling, Tyskland**
Karl, Markus, Degernbach 62, 94327 Bogen, Tyskland
Lederer, Roland, Hirschensteinstrasse 12, 94374 Schwarzach, Tyskland

(74) Fuldmægtig i Danmark: **Inspicos P/S, Kogle Alle 2, 2970 Hørsholm, Danmark**

(54) Benævnelse: **Sealing washer**

(56) Fremdragne publikationer:
EP-A1- 0 632 557
EP-A1- 0 695 900
EP-A1- 1 187 287
EP-A1- 1 734 627
WO-A1-2012/008898
DE-B- 1 161 971
DE-U1- 29 908 044
DE-U1-202006 010 637
US-A1- 2006 042 814

gabo Systemtechnik GmbH

The invention concerns a sealing disc for sealing, in a conductor line-like manner, a supply opening for a line, such as a cable or cable protection tube, into a tube for installing lines or into a housing, in particular a housing of a single-strand seal.

A sealing disc which separately seals lines when fed into a tube or sheathed line assembly by means of a single-strand seal to prevent fluid from entering the tube is known from EP 1 187 287 A1. The sealing disc comprises a flat, essentially cylindrical body, the radial outer circumferential surface of which is designed as a pressing surface on which a sealing contact is formed with respect to the housing of the single-strand seal. Two cylindrical line passages sealed with removable plugs extend through the disc parallel to the cylinder axis of the sealing disc. The sealing plugs are each formed by a cylindrical core and several ring cylinders or sealing sleeves concentrically arranged around the core in a manner similar to an onion shell, which are connected to the core and the rest of the disc via a predetermined breaking web extending in a radial plane. The ring cylinders arranged around the core in an onion-skin-like manner allow lines of different diameters to be sealed with one and the same sealing disc. Each ring cylinder covers a sealing range (e.g. 10.5 to 13.5 mm) in which lines with a line diameter within the covered range can be sealed. To expose the line passage, the core and, if necessary, one or more ring cylinders are to be separated from the sealing disc. In order to be able to insert the cable into the passage, a slot is made in the sealing disc which runs through the disc from the outer circumferential surface to the core and along its entire axial thickness. Once the passage is exposed, the slot can be widened to insert the line radially from the outside into the line passage. The slot has a first axially parallel section, is offset in the circumferential direction and opens into a second axially parallel section which is circumferentially offset relative to the first axially parallel section.

During the assembly of a line, an axial misalignment may remain between the slot sealing contact surfaces to be placed against each other and the slot sealing contact surfaces may not be fully sealingly resting against each other. It also turned out that due to the increasing variety of line diameters and tolerances in relation to the nominal diameters of the lines, despite the onion-shell construction, different models of the known sealing disc are necessary to seal all lines to be sealed according to the user's wishes while maintaining the specified sealing properties at tube or housing supplies.

DE 299 08 044 U1 concerns a sealing unit for cable and pipe feedthroughs with cores which can be removed to accommodate a cable or pipe. To insert the cables or pipes, radial slots are

provided between the passages and the circumference, which are either curved or cranked. Concentric annular punchings are made to create different diameters for openings.

DE 20 2006 010 637 U1 concerns an insulating element made of heat-resistant material, preferably mineral wool, with a continuous opening in which a pipe shell is arranged to accommodate a hot pipe. To accommodate the pipe shells, a saw cut is made from one side.

EP 0 632 557 A1 concerns a cable sleeve consisting of a sleeve tube and frontal sealing bodies into which sealing body inserts with cable entry openings are inserted. The variable seal body inserts, as well as the seal body itself, are divided longitudinally in the insertion direction so that they can be used on uncut cables.

US 2006/0042814 A1 concerns a sealing element with an outer sealing surface and several slots for inserting cables into openings. To accommodate cables of different diameters and shapes, cable adapters adapted to the shape of the cable are used.

EP 0 695 900 A1 concerns elements for sealing telecommunication cables, wherein a sealing sleeve has openings and a slot with detent elements for receiving cables.

EP 1 734 627 A1 concerns sealing bodies for cable feedthroughs, consisting of at least two partial bodies which are solid and whose opposite surfaces form an insertion plane for cables. These surfaces are wave-like or meander-like or labyrinth-like.

DE 11 61 971 concerns a sleeve or an end closure for electrical cables.

It is an object of the invention to overcome the drawbacks of the state of the art, in particular to provide a sealing disc for sealing, in a conductor line-like manner, a supply opening for a line into a tube or into a housing, which provides a high sealing effect over its entire period of use for as many different line diameters as possible and which is quick and easy to install. In particular, it is the object to avoid an axial offset between the sealing contact surfaces.

This problem is solved by the subject matter of the invention which is defined in the independent claims.

According to a first aspect of the invention, a sealing disc for sealing, in a conductor line-like manner, a supply opening for a line, such as a cable or a cable protecting tube, into a tube for installing lines or into a housing, in particular a housing of a single-strand seal, comprises a circumferential pressing surface providing a sealing contact to the tube or to the housing, at least one core which is removable for forming a feed-through opening for the line, in particular by separating a predetermined breaking or tearing web, and at least one slot

extending from the circumferential pressing surface radially to the core through the axial thickness of the sealing disc, through which the line can be inserted radially. According to the invention, the slot is formed by shape-complementary slot boundary surfaces resting on each other along a tie-in profile.

The tie-in profile forms, along its extension through the axial thickness of the sealing disc, a tie-in opening as well as a tie-in section or latch extending through the tie-in opening in the circumferential direction of the sealing disc. The tie-in section forms a projection and a recess in the tie-in profile, each with a circumferential directional component, whereby an axial position is defined at which the slot boundary surfaces shall engage. The retention forces acting along the tie-in section between the shape-complementary slot boundary surfaces hinder the separation of the slot boundary surfaces from each other in the sense of a tie-in connection. The direction of passage of the line through the sealing disc is preferably parallel to the circumferential surface of the sealing disc and/or to an axial direction defined in particular by a symmetry axis such as a rotational symmetry axis of the sealing disc. Due to the locally defined and definite tie-in position of the slot boundary surfaces, there is sealing contact on the full surface between both slot boundary surfaces, even in the case of careless installation. Because of the engagement, no shape warping takes place during installation of the sealing body, which might compromise the fatigue resistance of the seal. It is to be clear that the sealing disc may provide a plurality of feed-through openings for lines which are closed in a fluid-tight manner by a respective core and each comprise a slot with a tie-in profile according to the invention.

In a preferred embodiment, the tie-in profile comprises two shape curves or bends arranged in an axial distance from each other, in particular at the same circumferential height, which in particular form a tie-in opening in the circumferential tie-in direction in one of the slot boundary surfaces. In particular, a respective tie-in contact section extending with a circumferential directional component connects to the shape curves or bends. In particular, the tie-in contact sections are, in particular at least at the circumferential height of the tie-in opening, arranged at an axial distance from each other. The tie-in opening in the one slot boundary surface defined by the shape curves or bends allows tying-in with the opposing slot boundary surface such that the respective axial relative position of the slot boundary surfaces are fixed with respect to each other. When the line being passed through is stressed by bending, the tie-in contact sections of the tie-in profile are pressed onto each other with increased force, whereby the sealing effect is increased. Further, the shape curves or bends increase the resistance against fluid passage, leading to an improved sealing effect.

In a preferred embodiment, the tie-in profile comprises a tie-in contact section offset with a predominant circumferential directional component and a tie-in contact section recessed

with a predominant circumferential directional component. Herein, the circumferential directional component is, in case of the tie-in contact section being formed rectilinearly, at least about as big as, if applicable, an axial directional component of the tie-in contact section. In case of a slot contact surface formed with a curve in an area of a tie-in contact section, with respect to the circumferential directional component, the tangent at the curvature with the biggest circumferential directional component is to be considered. In particular, the offset tie-in contact section and the recessed tie-in contact section each cover the same circumferential distance. In particular, the tie-in contact sections have equal circumferential directional components. In particular, the tie-in contact sections are formed axially symmetric. In a preferred embodiment, the tie-in contact sections extend perpendicular to the axial direction and/or parallel to the circumferential direction. The predominant circumferential directional component of the respective tie-in contact section prevents an accidental slipping-out of the slot contact surfaces resting on each other along the tie-in profile.

In a preferred embodiment, the tie-in profile comprises at least three shape bends or shape curves. In particular, the tie-in profile extends rectilinear between the shape bends or curves. Surprisingly, it was shown that for the common installation scenarios of the sealing disc, the fluid passage energy is decreased by such a high degree by providing three or four shape bends in the tie-in profile that, under normal circumstances, a fluid passage is ruled out for the entire product lifespan. Because more complex tie-in profiles may increase production costs, this preferred embodiment achieves an optimum of permanent leak-tightness and production costs.

In a preferred embodiment, the tie-in boundary surface each comprise at least one axial sealing contact section arranged in the tie-in profile between at least two shape bends or curves, wherein in particular the at least one axial sealing contact section extends along between about 1/8 or about 1/6 of the axial thickness of the sealing disc. The axial sealing contact section serves to transmit high pressing sealing contact surfaces between the slot boundary surfaces. It was shown that the pressing forces between the slot boundary surfaces could be decreased without impeding the sealing performance because this is compensated for by the sealing effect achieved by framing the axial sealing contact section with shape bends or curves. Due to the low compression of the sealing disc, the sealing properties are ensured over a longer lifespan.

In a preferred embodiment, the slot boundary surfaces each comprise at least three separate axial sealing contact sections, which in particular each are separated from another of the axial sealing contact sections by at least one shape bend or one shape curve in the tie-in profile and/or one tie-in contact section in particular extending in the circumferential direction. It

was shown that sealing and contact sections extending in the circumferential direction and alternating with axial sealing contact sections lead to a disproportionately high decrease in fluid passage energy.

In a preferred embodiment, the slot boundary surfaces are each formed axially symmetric to the axial centre of the sealing disc. In particular, the sealing disc is formed axially symmetric to the axial centre of the sealing disc. Because of the axially symmetric design, installation of the sealing disc is simplified. Furthermore, in production, dimensional accuracy is improved due to the equally distributed stress during punching of the slot, positively impacting the sealing effect.

According to the invention, one of the slot boundary surfaces forms a tie-in recess and the other slot boundary surfaces forms a tie-in projection, wherein the recess depth or the projection height in the circumferential direction are 1/5 to 1/3 of the sealing disc diameter. In a preferred embodiment, the axial recess width or projection width is at least 20% of the axial thickness of the sealing disc. The recess/projection configuration provides an intuitively workable tie-in closing mechanism for the radial introduction of lines into the sealing disc. It was shown that, for the preferred geometric relations between projection height and projection width relative to the sealing disc diameter, respectively the sealing disc thickness, an optimum of ease of installation and sealing effect is achieved, in particular for the preferred sealing disc materials.

A further aspect, which may be combined with the aspect previously described and its preferred embodiments, concerns a sealing disc for sealing, in a conductor line-like manner, a supply opening for a line, such as a cable or a cable protecting tube, into a tube for installing lines or into a housing, in particular a housing of a single-strand seal, which comprises a circumferential pressing surface, providing a sealing contact to the tube or the housing, and at least one core which is removable for forming a feed-through opening for the line. The sealing disc comprises at least one slot extending from the circumferential pressing surface radially to the core through the axial thickness of the sealing disc, through which the line can be inserted radially, as well as at least one sealing sleeve arranged concentrically around the removable core, which is connected to the removable core via a predetermined breaking web or predetermined tearing web extending in a radial plane and comprises an inner sleeve wall for establishing a sealing contact with the line. According to the invention, the inner sleeve wall widens and/or tapers along its axial extension.

Due to the widening and/or tapering, the passage may be adapted, at least for axial sections, to the allowable line diameters to be inserted into the passage such that, within the line diameter boundaries, a line is completely sealed according to the exact line measurements by

a section of the inner sleeve wall with an exactly fitting inner sleeve diameter. Thus, an optimal sealing contact could be provided with a single sealing disc for a significantly greater number of line diameters than before, including production tolerances. It is to be clear that the inner sleeve wall of a sealing sleeve is separated by the predetermined breaking web or predetermined tearing web into two axial sections, as long as the removable core or a removable sealing sleeve situated radially concentric on the inside is connected to the sealing sleeve via the predetermined breaking web or predetermined tearing web. After removal of the core and, where applicable, one or more of the sealing sleeves, the inner sleeve wall is continuously exposed to free a passage opening through the axial thickness of the sealing disk.

In a preferred embodiment, the inner sleeve wall widens and/or tapers conically. Preferably, the inner sleeve wall tapers, preferably constantly, from an axial inner side of the sealing disc up to the separated predetermined breaking web or predetermined tearing web and the inner sleeve wall widens conically, preferably constantly, up to the opposing axial outer side of the sealing disc. Due to the widening and/or tapering of the inner sleeve wall along its axial extension, the free diameter of the passage through the sealing disc into which the line is introduced is continually reduced, respectively increased. According to such measure, a continuous range of allowable line diameters is provided.

In a preferred embodiment, the inner sleeve wall widens and/or tapers in steps, forming at least one shoulder. With a stepped shoulder, the number of line diameters fittingly sealable with one sealing sleeve doubles or the stress on the sealing sleeve during introduction of a line with the maximum allowable diameter is stretched less in sections. Preferably, the inner sleeve wall is formed axially parallel apart from the at least one shoulder. Preferably, at least one shoulder is formed on the inner sleeve wall in front of the position of the predetermined breaking web or predetermined tearing web along the axial extension and one shoulder is formed behind the position of the predetermined breaking web or predetermined tearing web along the axial extension.

In a preferred embodiment, the at least one sealing sleeve has a constant radial wall thickness. It is to be clear that a plurality sealing sleeves arranged concentrically around the core and a first sealing sleeve may be provided, for which the properties described previously and in the following apply in the same manner. In particular, the sealing disc may comprise an inner wall formed shape-complementary to the outer walls of the sealing sleeves and/or of the core.

In a preferred embodiment, the at least one sealing sleeve has a wall thickness decreasing axially towards the outside, in particular symmetrically to an axial centre of the sealing disc.

Because of the decreased wall thickness in axially outer sections, the flexibility of the sealing sleeves is higher in the axially outer section such that a high sealing effect is achieved even when the line being passed through is guided in a curved manner directly adjacent to the sealing disc.

In a preferred embodiment, an outer sleeve wall of the at least one sealing sleeve widens and/or tapers radially, in particular conically, along its axial extension. Preferably, the radial widening, respectively tapering, is formed equal in shape to the widening, respectively tapering, of the inner sleeve wall. Via the design of the outer sleeve wall, the design of a deformation space formed between the sealing sleeves and/or the core and bridged by the predetermined breaking web or predetermined tearing web may be adapted such that respectively accordingly higher or lower pressing forces on the inner sleeve wall of the sealing sealing sleeve are transmitted, depending on whether a large, respectively small, compensation space is provided in sections or along the whole axial extension.

In a preferred embodiment, the outer sleeve wall tapers conically from the axial centre of the sealing disc axially towards the outside. This achieves that the highest radial sealing forces on an inserted line are exerted in the axially outer section of the sealing sleeve. In an alternative preferred embodiment, the outer sleeve wall widens or tapers forming a wall shoulder in the axial centre of the sealing disc.

In a preferred embodiment, an outer sleeve wall of the at least one sealing sleeve extends parallel to the inner sleeve wall and/or an outer sleeve wall of the at least one sealing sleeve extends axially parallel.

In a further aspect of the invention, which is a preferred embodiment of the aspects previously mentioned, a sealing disc is provided which serves to seal, in a conductor line-like manner, a supply opening for a line, such as a cable or a cable protecting tube, into a tube for installing lines or into a housing, in particular the housing of a single-strand seal. The sealing disc comprises a circumferential pressing surface providing a sealing contact to the tube or to the housing, at least one core which is removable for forming a feed-through opening for the line, at least one slot extending from the circumferential pressing surface radially to the core through the axial thickness of the sealing disc, through which the line can be inserted radially, and a plurality of removable sealing sleeves arranged concentrically around the removable core, which are connected with each other with the removable core via a predetermined breaking web or a predetermined tearing web extending in the radial direction. According to the invention, at least one of the sealing sleeves has a different radial wall thickness compared to the other sealing sleeves arranged concentrically around the removable core.

With the measure according to the invention, a more uniform sealing effect across the different line diameters allowable for one sealing disc is achievable by adapting the radial wall thickness of one or more sealing sleeves. It was shown that, via the forces acting on the circumferential pressing surface, an inhomogeneous distribution of stress in the sealing disc could be compensated, in sections of low compression in the radial direction by increasing the sealing sleeve wall thickness, respectively in sections of low compression in the radial direction by decreasing the sealing sleeve wall thickness. Thus to the largest extent equal sealing properties of the respective sealing sleeves could be ensured independent from their concentric arrangement within the sealing disc.

In a preferred embodiment, the maximum radial wall thickness of the sealing sleeves increases from the radial outermost sealing sleeve towards the radial innermost sealing sleeve. In particular, the radial innermost sealing sleeve is 1.2 times as thick as the radial outermost sealing sleeve.

In a preferred embodiment, the difference between the wall thicknesses of a sealing sleeve with a maximum wall thickness and a sealing sleeve with a minimum wall thickness is more than 5% and at most 30%, in particular the difference is between 10% and 25%, preferably between 10% and 20%, in each case in relation to the wall thickness of the sealing sleeve with the minimum wall thickness.

In a preferred embodiment, the sealing sleeves each comprise a high thickness axial sleeve section, in particular arranged axially centred, and at least one low wall thickness axial sleeve section, in particular arranged axially eccentric, preferably symmetric to the axial centre of the sealing sleeve. Preferably, the high wall thickness axial sleeve section is separated from the low wall thickness axial sleeve section by a stepped shoulder. In particular, the high wall thickness axial sleeve section of one of the sealing sleeves has a different radial ring cylinder wall thickness than the respective high wall thickness axial sleeve sections of the other sealing sleeves.

In a preferred embodiment, the sealing disc is composed of an elastomer such as a thermoplastic elastomer or ethylene propylene diene rubber (EPDM).

Further properties, advantages and features of the invention are illustrated by the following description of preferred embodiments of the invention referencing the attached drawings in which show:

Fig. 1a a perspective view of a first embodiment of a sealing disc according to the invention;

Fig. 1b a perspective view of the sealing disc according to Fig. 1a, in which a feed-through opening for a line is exposed;

Fig. 1c a side view of the sealing disc according to Fig. 1a;

Fig. 2a a perspective view of a second embodiment of a sealing disc according to the invention;

Fig. 2b a side view of the sealing disc according to Fig. 2a;

Fig. 3a a perspective view of a third embodiment of a sealing disc according to the invention;

Fig. 3b a side view of the sealing disc according to Fig. 3a;

Fig. 4a a perspective view of a fourth embodiment of a sealing disc according to the invention;

Fig. 4b a side view of the sealing disc according to Fig. 4a;

Fig. 5a a cross-sectional view of a fifth embodiment of a sealing disc according to the invention;

Fig. 5b an enlarged section of the cross-sectional view of Fig. 5a;

Fig. 6a a cross-sectional view of a sixth embodiment of a sealing disc according to the invention;

Fig. 6b an enlarged section from Fig. 6a;

Fig. 7a a cross-sectional view of a seventh embodiment of a sealing disc according to the invention;

Fig. 7b an enlarged section from Fig. 7a;

Fig. 8a a cross-sectional view of an eighth embodiment of a sealing disc according to the invention;

Fig. 8b an enlarged section from Fig. 8a;

Fig. 8c a cross-sectional view of the sealing disc according to Fig. 8a, wherein a feed-through opening for a line is exposed by separating a core;

Fig. 8d an enlarged section of Fig. 8c.

In Figures 1a to 1c, a first embodiment of the sealing disc according to the invention is generally provided with the reference sign 101. The sealing disc 101 is formed in one piece from an elastomer, such as a thermoplastic elastomer or ethylene propylene diene rubber (EPDM). The sealing disc 101 has a cylindrical form, formed rotationally symmetric around a main axis. In particular, the sealing disc 101 is composed of a plurality of cylindrical or frustum-shaped sections arranged around a common cylinder axis and directly adjacent to each other, which have different outer diameters such that circular closed circumferential radial shoulders are formed on the outer circumference of the sealing disc 101.

As may be seen in particular from Fig. 1c, the sealing disc 101 is delimited in the axial direction by a respective circular axial side 102, 104 lying in a radial plane. The radial outer circumference joins the axial sides 102, 104 and forms a circumferential pressing surface 109 continually extending around the sealing disc 101. When the sealing disc is used for sealing a supply opening into a tube for installing a line bundle or into a housing, the sealing disc 101 is inserted into a receiving structure radially surrounding the sealing disc 101 in such a manner that the circumferential pressing surface 109 provides a sealing contact at the receiving structure of the tube or the housing. The circumferential pressing surface 109 comprises a main pressing surface arranged centrical in relation to the axial thickness of the sealing disc 101 as well as two auxiliary pressing surfaces arranged axially symmetric in relation to the axial centre, which are recessed towards the radial inside by 5% to 10% of the sealing disc diameter. Thus, the auxiliary pressing surfaces only come into sealing contact insofar as the housing or the tube into which the sealing disc is inserted has a receiving structure which is a least partially formed shape-complementary to the outer circumference of the sealing disc 101. The auxiliary pressing surfaces are connected to the main pressing surfaces via a respective side section inclined relative to a pure radial plane, the side section acting as auxiliary pressing surface as well, given an appropriate design.

As may be seen in particular in Figures 1a and 1c, the sealing disc 101 comprises a cylindrical core 103 protruding axially on both axial sides 102, 104 of the sealing disc 101 and formed around an axis A. The core 103 is surrounded by three sealing ring cylinders or sealing sleeves 121, 123, 125 arranged concentrically to the core 103. The sealing sleeves 121, 123, 125 each have different axial dimensions and protrude by different degrees over the axial sides 102, 104 symmetrical to the axial centre of the sealing disc 101, such that a stepped shoulder with relation to the core 103 results. The core 103 has a bigger axial dimension than the

sealing sleeves 121, 123, 125 and protrudes over both axial sides 102, 104 and over the sealing sleeves 121, 123, 125. The package consisting of the sealing sleeves 121, 123, 125 and the core 103 is circularly enclosed by the rest of the sealing disc 1. The core 103 and the sealing cylinder rings 121, 123, 125 are integrally connected with each other and with the rest of the sealing disc 101 via a predetermined breaking web or predetermined tearing web extending disc-shaped in an axially centred radial plane. The core 103 and an arbitrary number of the sealing sleeves 121, 123, 125 surrounding the core may be separated from the sealing disc 101 manually or using a cutting tool to provide a passage space 119 for a line, as may be seen in particular in Fig. 1b. The volume and the minimum and maximum inner diameter of the exposed passage space 119 depend on whether only the core or, additionally, one or more sealing sleeves 121, 123, 125 are separated. Thus, by separating the core 103 and the sealing sleeves 121, 123, 125, a passage space 119 assigned to a line with a certain line diameter may be exposed.

Apart from the core 103 enclosed in an onion-skin-like manner by the sealing sleeves 121, 123, 125, six additional cores 103' are provided in the sealing disc 1, each protruding over the axial sides 102, 104 of the sealing disc by the same amount. The cores 103' are as well integrally connected to the sealing disc 101 via a predetermined breaking web or predetermined tearing web and separable from the sealing disc 101 for forming additional passage spaces for lines, cables or cable tubes. The cores 103' may be formed in the same manner as the core 103 in additional embodiments of the invention which are not shown.

A slot 105 extends in the radial direction from the circumferential pressing surface 109 along the entire axial thickness of the sealing disc 101 through the sealing sleeves 121, 123, 125 to the core 103. The slot 105 allows introducing a line radially into the passage space 119 after removal of the core 103 and, where applicable, one or more sealing sleeves 121, 123, 125. To this end, two opposing slot boundary surfaces 111, 113 separated from each other by the slot 105 may be pulled apart to form an insertion gap. The slot boundary surfaces 111, 113 automatically close the insertion gap due to the elasticity of the sealing disc material. Additionally, a slot is assigned to a respective one of the cores 103' for radial insertion of a line, as well extending in the radial direction from the radial circumferential pressing surface 109 along the entire axial thickness of the sealing disc up to the core section 103', which slot may be designed in the same manner as the slot 105.

As may be seen in particular in Fig. 1c, the slot 105 comprises a profile extending along the slot boundary surfaces 111, 113, opposing in the circumferential direction and resting on each other in a closed slot state, which according to the invention is provided as a tie-in profile. The slot boundary surfaces, 111, 113 are formed shape-complementary to each other such that properties described in connection with one slot boundary surface 111, 113 apply accordingly

to the respective other slot boundary surface 111, 113 in a shape-complementary manner. For forming a tie-in profile, the slot boundary surfaces 111, 113 extend from the axial sides 102, 104 along a first axially parallel axial sealing contact section 116, 118 through the sealing disc 101 towards the axial centre and comprise two surface shape bend positions at which the slot boundary surfaces 111, 113 each turn into a section parallel to the circumferential direction. The shape bend positions of the slot boundary surface 111 define a tie-in opening through which a tie-in projection forming the shape-complementary opposing slot boundary surface 113 may be introduced into a tie-in contact. A tie-in contact is formed at each slot boundary surface 111, 113 by two respective circumferentially parallel tie-in contact sections 112, 114. The tie-in contact sections 112, 114 of one slot boundary surface 111, 113 are arranged at an axial distance of a fifth of the axial thickness of the sealing disc 101 from each other. The tie-in contact sections 112, 114 of a respective slot boundary surface 111, 113 are connected to each other at a circumferential distance to the shape bend positions of a fourth of the sealing disc diameter by a respective rounded axial sealing contact section 117 extending axially tangential. The slot boundary surface 111 forms a tie-in recess into which a tie-in projection, formed opposing and in a shape-complementary manner by the slot boundary surface 113, may be sealingly inserted. The respective axially parallel axial sealing contact sections 116, 118 and the curved axial sealing contact section 117 of the slot boundary surfaces 111, 113 absorb sealing contact forces introduced into the sealing disc 101 via the circumferential pressing surface 109 and transmit them across the slot 105 between the slot boundary surfaces 111, 113. The tie-in contact sections 112, 114 adjacent to the tie-in opening provide a friction and sealing contact between the slot boundary surfaces 111, 113, whereby a tendency for opening or tying-out is reduced.

Referring to Fig. 1c, the tie-in profile is offset from a respective first axial sealing contact section 116, 118 of the slot boundary surfaces 111, 113 in a pure circumferential direction towards the second axial sealing contact section 117 and back to a third axial sealing contact section 118, 116 in a pure circumferential direction. Between two respective axial sealing contact sections 116, 117, 118 of a respective slot boundary surface 111, 113, at least one respective shape bend is formed in the slot boundary surface 111, 113, resulting in a complex labyrinth seal.

It should be clear that a tie-in profile according to the invention may me provided for the core 103 a well as for the cores 103'.

In the Figures 2a and 2b, a second embodiment of a sealing disc according to the invention is shown, wherein, for improving readability of the Figure description and for avoiding repetition, identical reference signs as in the embodiment according to Figures 1a to 1c, which

are increased by 100, were used for identical or similar components of the sealing disc according to the second embodiment.

The sealing disc 201 differs from the sealing disc 101 in that the respective axial sealing contact section 217 of the slot boundary surfaces 211, 213 connecting the circumferentially extending tie-in contact sections 212, 214 of the slot boundary surfaces 211, 213 is formed rectilinear, in particular axially parallel, and that the transitions to the circumferentially extending tie-in contact sections 212, 124 of the slot boundary surfaces 211, 213 are each formed as a shape bend with an angle of 90°, as may be seen in particular in Fig. 2b. The number of shape bend positions between two respective axial sealing contact sections 116, 117, 118 thus doubles, whereby the sealing effect in the axial direction is improved.

In the Figures 3a and 3b, a third embodiment of a sealing disc according to the invention is shown, wherein for improving readability of the Figure description and for avoiding repetition, identical reference signs as in the embodiment according to Figures 1a to 1c, respectively 2a and 2b, which are increased by 100, respectively 200, were used for identical or similar components of the sealing disc according to the second embodiment.

The sealing disc 301 differs from the sealing disc according to the Figures 2a and 2b in that the respective axial sealing contact sections 316, 318 of the slot boundary surfaces 311, 313 close to the axial sides 302, 304 have a predominant axially parallel directional component as well as a circumferential directional component. The axial sealing contact sections 316, 318 are formed level with an angle of about 20° relative to the axial direction. Due to the inclination of the axial sealing contact sections 316, 318, the respective tie-in contact sections 312, 314 of the slot boundary surfaces 311, 313 parallel to the circumferential direction are elongated in comparison to the sealing disc 201 to about a quarter of the sealing disc diameter each, with the rest of the sealing disc 301 design remaining the same. An acute angle is formed between the axial sealing contact sections 316, 318 close to the axial sides and the circumferentially parallel tie-in contact sections 312, 314, with which an improvement in seal fit as well as an increased local sealing contact pressure are achieved.

In the Figures 4a and 4b, a fourth embodiment of a sealing disc according to the invention is shown, wherein for improving readability of the Figure description and for avoiding repetition, identical reference signs as in the embodiment according to Figures 1a to 1c, 2a and 2b, respectively 3a and 3b, which are increased by 100, 200, respectively 300, were used for identical or similar components of the sealing disc according to the previous embodiments.

The sealing disc 401 particularly differs from the embodiment according to the Figures 2a and 2b in that the respective tie-in contact sections 412, 414 of the slot boundary surfaces 411, 413 do not extend perpendicular to the axial direction, but instead have a component in the axial direction as well as a predominant component in the circumferential direction. The respective tie-in contact sections 412, 413 extend at an angle of about 70° relative to the axial direction and meet in a respective shape bend edge of the slot boundary surfaces 111, 113 in the axial centre of the sealing disc 401. The respective shape bend edge in the axial centre forms an axial sealing contact section 417 at which sealing contact forces introduced via the circumferential pressing surface 409 are transmitted from one slot boundary surface 411, 413 to the respective other slot boundary surface 413, 411.

In the Figures 5a and 5b, a fifth embodiment of a sealing disc according to the invention is shown, wherein for improving readability of the Figure description and for avoiding repetition, identical reference signs as in the previous embodiment according to Figures 1a to 1c, 2a and 2b, 3a and 3b, respectively 4a and 4b, which are increased by 100, 200, 300, respectively 400, were used for identical or similar components of the sealing disc according to the fifth embodiment.

The sealing disc 501 differs from the sealing disc according to the Figures 4a and 4b in that it only comprises one core 503, wherein it should be clear that further passage closure plugs 503', as shown in the previous embodiments, may be provided in the same manner in the sealing disc 501. Because of the position of the section plane, the slot with the tie-in profile is not visible in the Figures 5a and 5b. The core 503 is surrounded, in the radial direction, in an onion-skin-like manner by three sealing ring cylinders 521, 523, 525 surrounding the core concentrically, which are formed integrally and separably with the core, with each other as well as with the rest of the sealing disc surrounding the sealing ring cylinders 521, 523, 525 an the core 503 via the predetermined breaking web or predetermined tearing web 515. The sealing ring cylinders 521, 523, 525 each form an inner ring cylinder wall 531, 533, 535 separating, in an axially centred manner, the predetermined breaking web or predetermined tearing web 515 into two axial ring wall halves.

By separating the core 503 and/or one of the sealing ring cylinders 521, 523, 525 from the sealing disc 501, a passage space my be exposed which is delimited by the inner ring cylinder wall 531, 533, 535 of the radial innermost remaining sealing cylinder ring 521, 523, 525. The sealing ring cylinders 521, 523, 525 are each formed with a wall thickness that decreases from the axial inside to the axial outside such that the maximum wall thickness and highest sealing pressing effect occur in the axial centre. The outer ring cylinder walls 541, 543, 545 of the sealing ring cylinders 521, 523, 525 are each formed cylindrically and concentrically around the core 503. The inner ring cylinder walls 531, 533, 535 are inclined with respect to the

respective outer ring cylinder wall 541, 543, 545 by about 5°. The inner ring cylinder walls 531, 533, 535 of the sealing ring cylinders 521, 523, 525 thus each widen circumferentially uniformly from the axially centred predetermined breaking web or predetermined tearing web 515 of the sealing disc 501 towards the axial side 502, 504. The inner ring cylinder walls 531, 533, 535 provide, within a range determined by the maximum inner diameter and the minimum inner diameter of a respective inner ring cylinder wall 531, 535, 535 and transition-free for any line diameter within the range, an optimum sealing contact section exactly corresponding to the circumference of the line.

In the Figures 6a and 6b, a sixth embodiment of a sealing disc according to the invention is shown, wherein for improving readability of the Figure description and for avoiding repetition, identical reference signs as in the embodiment according to Figures 5a and 5b, which are increased by 100, were used for identical or similar components of the sealing disc according to the fifth embodiment.

The sealing disc 601 differs from the sealing disc according to the Figures 5a and 5b in that the inner ring cylinder walls 631, 633, 635 of the sealing ring cylinders 621, 623, 625 as well as a passage section limiting wall 627, delimiting the onion-skin arrangement of the sealing ring cylinders 621, 623, 625 and the core 603, conically widen from the axial sides 602, 604 towards the axially centred predetermined breaking web or predetermined tearing web 615. The sealing ring cylinders 621, 623, 625 have a constant cylinder wall thickness. This leads to the outer ring cylinder walls 641, 643, 645 of the sealing cylinders 621, 623, 625 conically widening by the same amount as the inner ring cylinder walls 631, 633, 635 from the axial sides 602, 604 towards the axially centred predetermined breaking web or predetermined tearing web 615. The outside of the core 603, the inner ring cylinder walls 631, 633, 635 and the outer ring cylinder walls 641, 643, 645 are formed concentrically (parallel in the sectional plane view) to each other on a respective side of the predetermined breaking web or predetermined tearing web 615. Apart from the core 603, the sealing disc 601 comprises further passage closing plugs 603'. End sections of the radial innermost and the radial central sealing ring cylinder 621, 623, respectively protruding over the axial sides 602, 604 of the sealing disc 601, are formed purely as a hollow cylinder, in particular without any taper or inclination with regard to the axial axis of sealing disc 601. The sectional plane is chosen such that a section of the slot 605 passes through the sectional plane.

In the Figures 7a and 7b, a seventh embodiment of a sealing disc according to the invention is shown, wherein for improving readability of the Figure description and for avoiding repetition, identical reference signs as in the embodiment according to Figures 6a and 6b, which are increased by 100, were used for identical or similar components of the sealing disc according to the sixth embodiment.

The sealing disc 701 differs from the sealing disc according to the Figures 6a and 6b in that both the inner sealing ring cylinder walls 731, 733, 735 as well as the outer ring cylinder walls 741, 743, 745 of the sealing ring cylinders 721, 723, 725 are formed purely cylindrical or without any taper or inclination with regard to the axial axis of the sealing disc 701. The sealing ring cylinder sections respectively extending away from the predetermined breaking web or predetermined tearing web 715 to the axial sides 702, 704 of the sealing disc 701 have different inner radii with a constant ring cylinder wall thickness on the left and the right side of the predetermined breaking web or predetermined tearing web 715, such that, after separating the core 703 and/or one of the sealing ring cylinders 721, 723, 725, a shoulder forms in the inner ring cylinder wall of the radial inner remaining sealing ring cylinder in the area of the predetermined breaking web or predetermined tearing web 715, at which the passage space tapers or widens in a stepwise manner.

In the Figures 8a to 8d, an eighth embodiment of a sealing disc according to the invention is shown, wherein for improving readability of the Figure description and for avoiding repetition, identical reference signs as in the embodiment according to Figures 7a and 7b, which are increased by 100, were used for identical and similar components of the sealing disc according to the seventh embodiment.

The sealing disc 801 differs from the embodiment according to the Figures 7a and 7b in that the sealing ring cylinder 821, 823, 825 each comprise an axially centred high wall thickness ring cylinder section and two low wall thickness sections, arranged symmetrically around the axial centre radially on the outside, such that a shoulder in a respective one of the inner ring cylinder walls 831, 833, 835 is formed between one of the axial sides 802, 804 and the axial centre of the sealing disc, respectively, such that the passage space 819 tapers stepwise towards the axial centre. The passage space limitation wall 827 comprises a respective shoulder at the same axial height as the sealing ring cylinders 821, 823, 825.

The radial outermost sealing ring cylinder 825 has a lower wall thickness d_1 in the high wall thickness section than the other sealing ring cylinders 823, 821. The radial innermost sealing ring cylinder 821 has a higher wall thickness d_3 in the high wall thickness section than the other sealing ring cylinders 823, 825. Contemplating all three sealing ring cylinders 821, 823, 825, the wall thickness d_1, d_2, d_3 increases from the radial outermost sealing ring cylinder 825 towards the radial innermost sealing ring cylinder 821. In the Figures 8c and 8d, the core 803 is removed from the sealing disc 801 according to the Figures 8a and 8b for illustrative purposes.

List of reference signs

101, 201, 301, 401, 501, 601, 701, 801	sealing disc
102, 104, 202, 204, 302, 304, 402, 404	axial side
502, 504, 602, 604, 702, 704, 802, 804	axial side
103, 103', 203, 203', 303, 303', 403, 403'	core
503, 503', 603, 603', 703, 703', 803, 803'	core
105, 205, 305, 405, 505, 605, 705, 805	slot
109, 209, 309, 409, 509, 609, 709, 809	circumferential pressing surface
111, 113, 211, 213, 311, 313, 411, 413	slot boundary surface
112, 114, 212, 214, 312, 314, 412, 414	tie-in contact section
515, 615, 715, 815	predetermined breaking or tearing web
116, 118, 216, 218, 316, 318, 416, 418	axial sealing contact section
117, 217, 317, 417	axial sealing contact section
119, 219, 319, 419, 519, 619, 719, 819	passage space
121, 123, 125, 221, 223, 225	sealing cylinders or sealing sleeves
321, 323, 325, 421, 423, 425	sealing cylinders or sealing sleeves
521, 523, 525, 621, 623, 625	sealing cylinders or sealing sleeves
721, 723, 725, 821, 823, 825	sealing cylinders or sealing sleeves
531, 533, 535, 631, 633, 635	ring cylinder inner walls
731, 733, 735, 831, 833, 835	ring cylinder inner walls
541, 543, 545, 641, 643, 645	ring cylinder outer walls
741, 743, 745, 841, 843, 845	ring cylinder outer walls
527, 627, 727, 827	passage section boundary wall
d_1, d_2, d_3	wall thickness

PATENTKRAV

1. Tætningsskive til ledningsvis tætning af en tilførselsåbning til en ledning såsom et kabel eller kabelbeskyttelsesrør, i et rør til lægning af ledninger eller et kabinet, omfattende:

- en trykomkredsflade (109, 209, 309, 409, 509, 609, 709, 809), der tilvejebringer en tætningskontakt til røret eller kabinettet;

- i det mindste én kerne (103, 203, 303, 403, 503, 603, 703, 803), der kan fjernes til tilvejebringelse af en gennemføringsoptagelse til ledningen; og

- i det mindste en slids (105, 205, 305, 405, 605, 705, 805), som fra trykomkredsfladen (109, 209, 309, 409, 509, 609, 709, 809) strækker sig hen til kernen i radial retning gennem den aksiale tykkelse af tætningsskiven (101, 201, 301, 401, 501, 601, 701, 801), og som ledningen kan indsættes i i radial retning,

hvor slidsen (105, 205, 305, 405, 605, 705, 805) er dannet af formkomplementære slidsgrænseflader (111, 113, 211, 213, 311, 313, 411, 413, 611, 613, 711, 713, 811, 813), der ligger op til hinanden langs en indknytningsprofil, idet én af slidsgrænsefladerne (111, 113, 211, 213, 311, 313, 411, 413, 611, 613, 711, 713, 811, 813) danner en indknytningslomme og den anden slidsgrænseflade et indknytningsfremspring, kendetegnet ved, at lommedybden eller fremspringshøjden i omkredsretningen udgør 1/5 til 1/3 af tætningsskivens diameter.

2. Tætningsskive ifølge krav 1, kendetegnet ved, at indknytningsprofilen har to formkrumninger eller -knæk, som er placeret i en indbyrdes afstand i aksial retning og særligt i samme omkredshøjde, som særligt danner en indknytningsåbning i en af slidsgrænsefladerne (111, 113, 211, 213, 311, 313, 411, 413, 611, 613, 711, 713, 811, 813), og som i hvert enkelt tilfælde et knyttekontaktafsnit (112, 114, 212, 214, 312, 314, 412, 414) særligt ligger op til.

3. Tætningsskive ifølge et af de foregående krav, kendetegnet ved, at indknytningsprofilen omfatter et knyttekontaktafsnit (112, 212, 312, 412), der rager fremad med en overvejende omkredsretningskomponent, og et knyttekontaktafsnit (114, 214, 314, 414), der rager bagud med en overvejende omkredsretningskomponent, idet knyttekontaktafsnittene (112, 114, 212, 214, 312, 314, 412, 414) særligt rager fremad/bagud med den samme omkredsafstand og/eller har ens omkredsretningskomponenter og/eller forløber vinkelret på den aksiale retning, og/eller at indknytningsprofilen i det mindste har tre formknæk eller -krumninger, hvor indknytningsprofilen særligt forløber i en lige linje mellem formknækkene eller -krumningerne.

4. Tætningsskive ifølge et af de foregående krav, kendetegnet ved, at slidsgrænsefladerne (111, 113, 211, 213, 311, 313, 411, 413, 611, 613, 711, 713, 811, 813) hver især omfatter i det mindste ét aksialtætningskontaktafsnit (117, 217, 317, 417), der er placeret i indknytningsprofilen mellem i det mindste to formknæk eller -krumninger, hvor det i det mindste ene aksialtætningskontaktafsnit (117, 217, 317, 417) særligt strækker sig over mellem 1/8 og 1/6 af den aksiale tykkelse af tætningsskiven (101, 201, 301, 401, 501, 601, 701, 801).

5. Tætningsskive ifølge et af de foregående krav, kendetegnet ved, at slidsgrænsefladerne (111, 113, 211, 213, 311, 313, 411, 413, 611, 613, 711, 713, 811, 813) hver især omfatter i det mindste tre separate aksialtætningskontaktafsnit (116, 117, 118, 216, 217, 218, 316, 317, 318, 416, 417, 418), der særligt i hvert enkelt tilfælde er adskilt ved hjælp af en formkrumning eller et formknæk i indknytningsprofilen og/eller et knyttekontaktafsnit (112, 114, 212, 214, 312, 314, 412, 414), der særligt forløber i omkredsretningen, fra et andet af aksialtætningskontaktafsnittene (116, 117, 118, 216, 217, 218, 316, 317, 318, 416, 417, 418).

6. Tætningsskive ifølge et af de foregående krav, kendetegnet ved, at slidsgrænsefladerne (111, 113, 211, 213, 311, 313, 411, 413, 611, 613, 711, 713, 811, 813) hver især er udformet aksesymmetrisk i forhold til den aksiale midte af tætningsskiven (101, 201, 301, 401, 501, 601, 701, 801), og/eller at den aksiale lommebredde eller fremspringsbredde i det mindste udgør 20 % af den aksiale tykkelse af tætningsskiven (101, 201, 301, 401, 501, 601, 701, 801).

7. Tætningsskive ifølge et af de foregående krav, der omfatter i det mindste én tætningsmuffe (521, 523, 525, 621, 623, 625, 721, 723, 725, 821, 823, 825), som kan fjernes, og som er placeret koncentrisk omkring kernen (503, 603, 703, 803), der kan fjernes, og som er forbundet med kernen (503, 603, 703, 803), der kan fjernes, via et brud- eller afrivningsmellemstykke (515, 615, 715, 815), der strækker sig i et radialt plan, og en muffeindervæg (531, 533, 535, 631, 633, 635, 731, 733, 735, 831, 833, 835) til fremstilling af en tætnende kontakt med ledningen, kendetegnet ved, at muffeindervæggen (531, 533, 535, 631, 633, 635, 731, 733, 735, 831, 833, 835) udvider sig og/eller tilspidses i sit aksiale forløb.

8. Tætningsskive ifølge krav 7, kendetegnet ved, at muffeindervæggen (531, 533, 535, 631, 633, 635) udvider sig og/eller tilspidses konisk, og/eller at muffeindervæggen (731, 733, 735, 831, 833, 835) udvider sig og/eller tilspidses trinformet under udformning af i det mindste en afsats, hvor muffeindervæggen (731, 733, 735, 831, 833, 835) bortset fra den i det mindste ene afsats særligt er udformet aksialparallelt, og/eller at der i hvert enkelt tilfælde er udformet i det mindste én afsats på muffeindervæggen (831, 833, 835) i det aksiale forløb før og efter brud- eller afrivningsmellemstykket (815).

9. Tætningsskive ifølge et af de foregående krav 6 til 8, kendetegnet ved, at den i det mindste ene tætningsmuffe (621, 623, 625, 721, 723, 725) har en konstant radial vægtykkelse, og/eller at den i det mindste ene tætningsmuffe (521, 523, 525, 821, 823, 825) har en vægtykkelse, der aftager aksialt udad særligt symmetrisk i forhold til en aksial midte af tætningsskiven (501, 801).

10. Tætningsskive ifølge et af de foregående krav, kendetegnet ved, at en muffeydervæg (641, 643, 645, 741, 743, 745) på den i det mindste ene tætningsmuffe (621, 623, 625, 721, 723, 725) i dennes aksiale forløb særligt udvider sig og/eller tilspidses konisk, hvor muffeydervæggen (641, 643, 645) særligt tilspidses konisk aksialt udad fra den aksiale midte af tætningsskiven (601), eller muffeydervæggen (741, 743, 745) udvides eller tilspidses i radial retning under udformning af en vægafsats i den aksiale midte af tætningsskiven (701).

11. Tætningsskive ifølge et af kravene 6 til 9, kendetegnet ved, at en muffeydervæg (641, 643, 645, 741, 743, 745, 841, 843, 845) på den i det mindste ene tætningsmuffe (621, 623, 625, 721, 723, 725, 821, 823, 825) forløber parallelt med muffeindervæggen, og/eller en muffeydervæg (541, 543, 545, 741, 743, 745, 841, 843, 845) på den i det mindste ene tætningsmuffe (521, 523, 525, 721, 723, 725, 821, 823, 825) forløber aksialparallelt.

12. Tætningsskive ifølge et af de foregående krav, der omfatter flere tætningsmuffer (521, 523, 525, 621, 623, 625, 721, 723, 725, 821, 823, 825), som er placeret koncentrisk omkring kernen (503, 603, 703, 803), der kan fjernes, og som er forbundet med hinanden og med kernen (503, 603, 703, 803), der kan fjernes, via et brud- eller afrivningsmellemstykke (515, 615, 715, 815), der strækker sig i radial retning, kendetegnet ved, at i det mindste én af tætningsmufferne (521, 523, 525, 621, 623, 625, 721, 723, 725, 821, 823, 825) har en anden radial vægtykkelse end de andre (521, 523, 525, 621, 623, 625, 721, 723, 725, 821, 823, 825) tætningsmuffer.

13. Tætningsskive ifølge krav 12, kendetegnet ved, at den maksimale radiale vægtykkelse af tætningsmufferne (821, 823, 825) tiltager fra den radialt yderste tætningsmuffe (825) til den radialt inderste tætningsmuffe (821), hvor den radialt inderste tætningsmuffe (821) særligt har en tykkelse, der er 1,2 gange større end den radialt yderste tætningsmuffe (825), og/eller at forskellen mellem vægtykkelserne på en tætningsmuffe med den største og en tætningsmuffe med den mindste vægtykkelse udgør mere end 5 % og maksimalt 30 %, særligt mellem 10 % og 25 %, fortrinsvis 20 %, i forhold til vægtykkelsen af tætningsmuffen med den mindste vægtykkelse.

14. Tætningsskive ifølge et af kravene 12 eller 13, kendetegnet ved, at tætningsmufferne (821, 823, 825) hver især omfatter et muffeaksialafsnit, der særligt er placeret aksialt i

midten, med stor vægtykkelse og i det mindste ét muffeaksialafsnit, som særligt er placeret aksialt excentrisk, med lille vægtykkelse, og som fortrinsvis er adskilt fra muffeaksialafsnittet med stor vægtykkelse ved hjælp af en trinformet afsats, hvor muffeaksialafsnittet med stor vægtykkelse på en af tætningsringcylindrene (821, 823, 825) særligt har en anden radial ringcylindervægtykkelse (d_1, d_2, d_3) end de pågældende muffeaksialafsnit med stor vægtykkelse på de andre tætningsringcylindre (823, 825, 821).

15. Tætningsskive ifølge et af de foregående krav, kendetegnet ved, at tætningsskiven (101, 201, 301, 401, 501, 601, 701, 801) består af en elastomer som for eksempel en termoplastisk elastomer eller ethylen-propylen-dien-gummi.

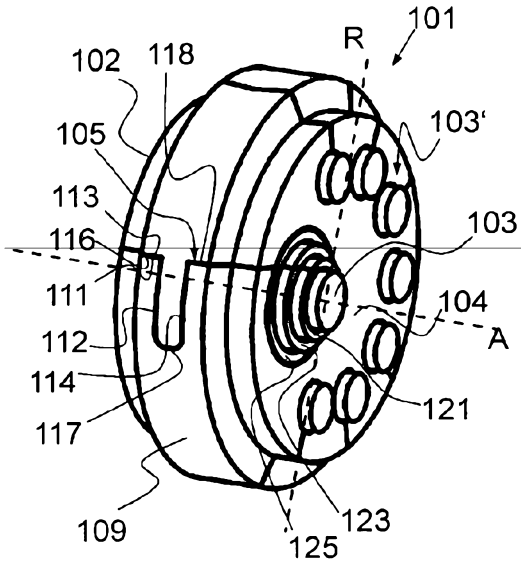

Fig. 1a

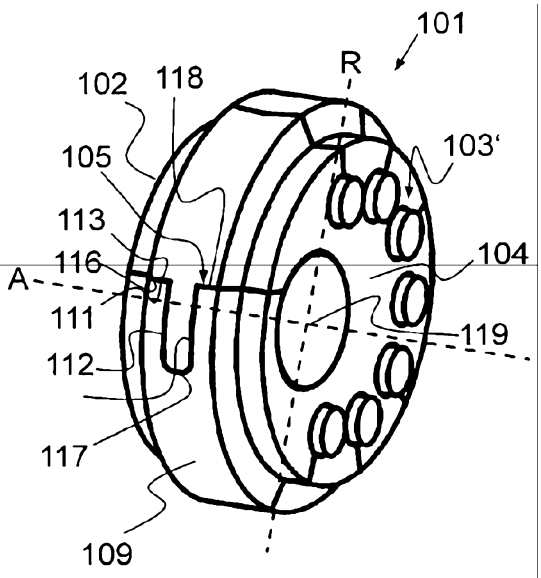

Fig. 1b

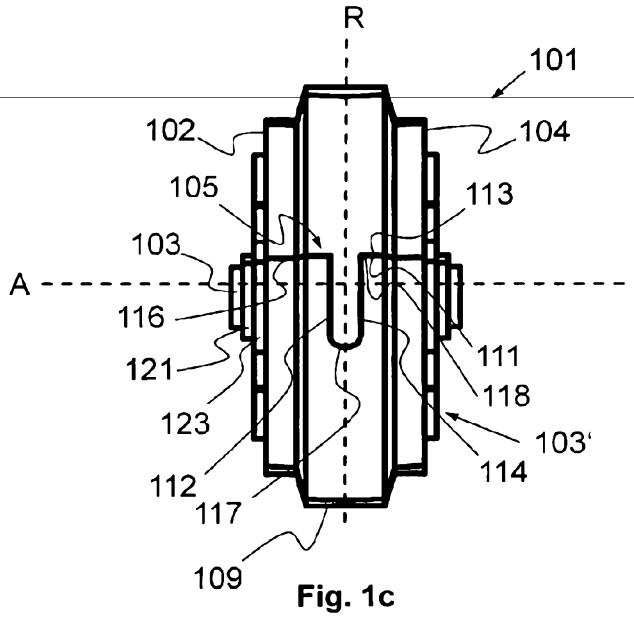

Fig. 1c

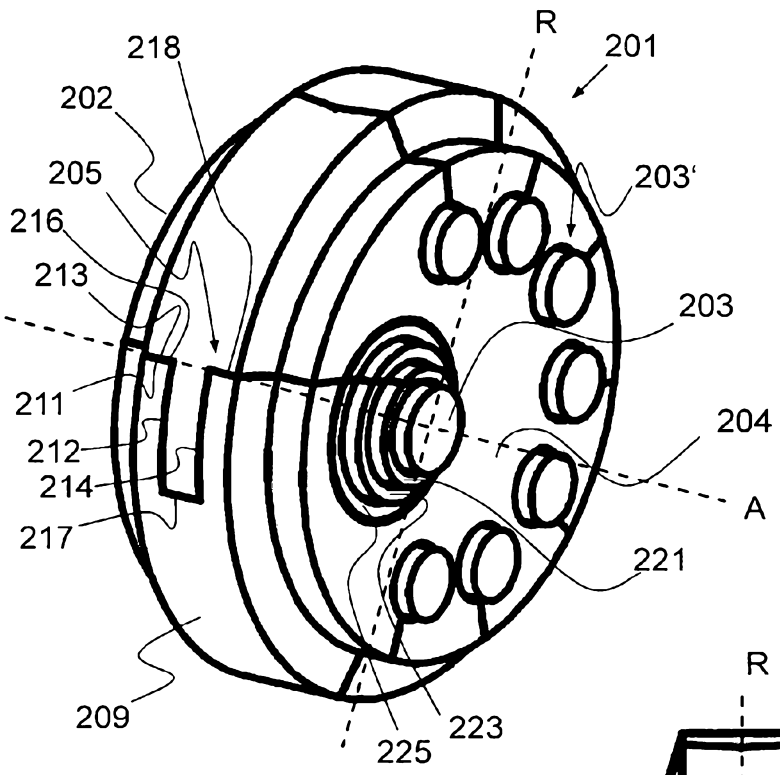
R
201
218
202
205
203'
216
213
203
211
204
212
214
A
217
221
209
225
223

Fig. 2a

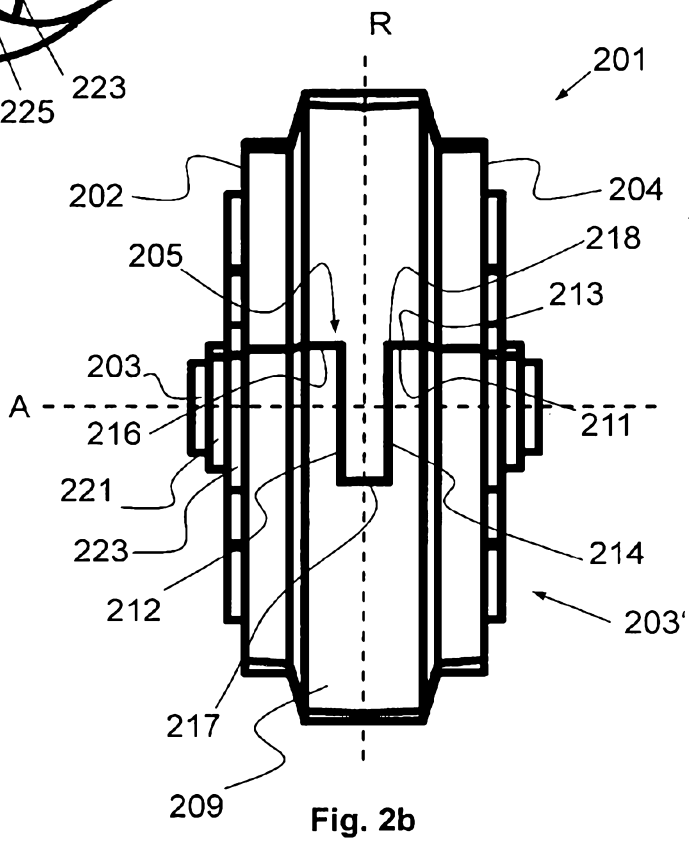
R
201
202
204
205
218
213
203
A
216
211
221
223
214
212
203'
217
209

Fig. 2b

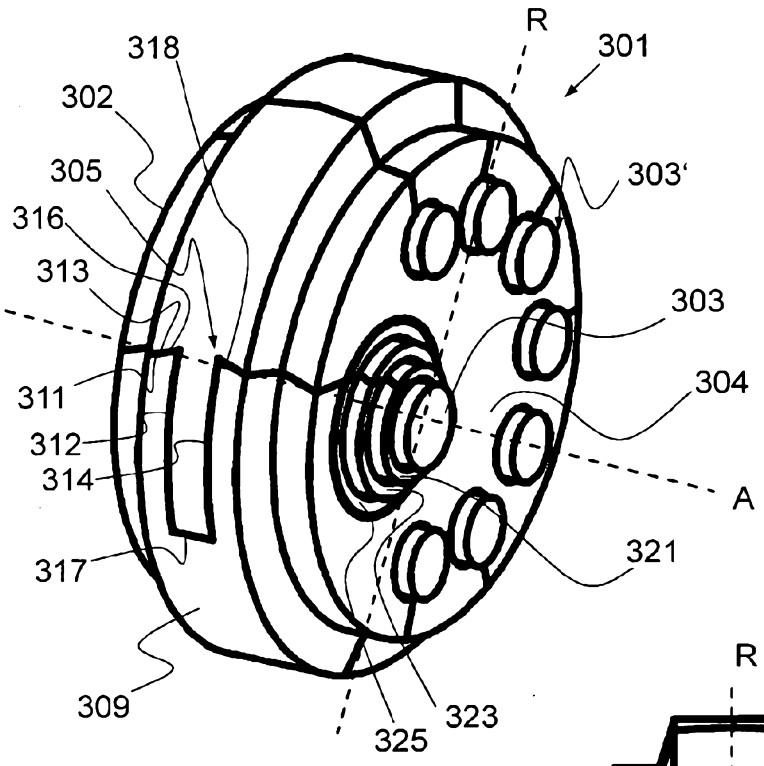
R
301
318
302
305
316
313
303'
303
304
311
312
314
A
321
317
309
323
325

Fig. 3a

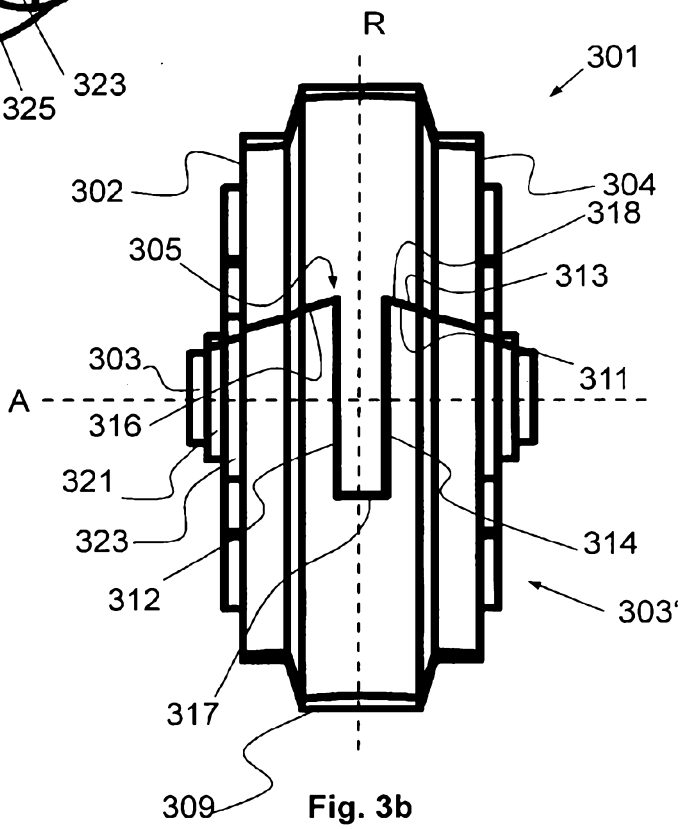
R
301
302
304
318
305
313
303
311
A
316
321
323
314
312
303'
317
309

Fig. 3b

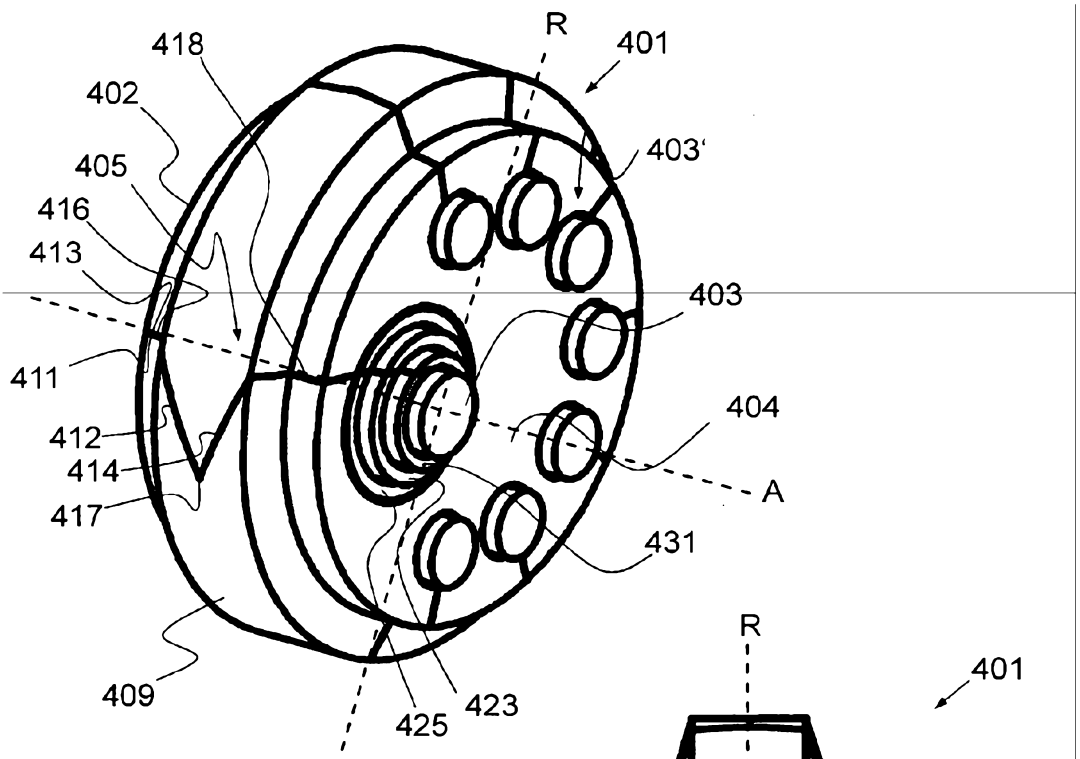
R
401
418
402
403'
405
416
413
403
411
404
412
414
A
417
431
409
425
423

Fig. 4a

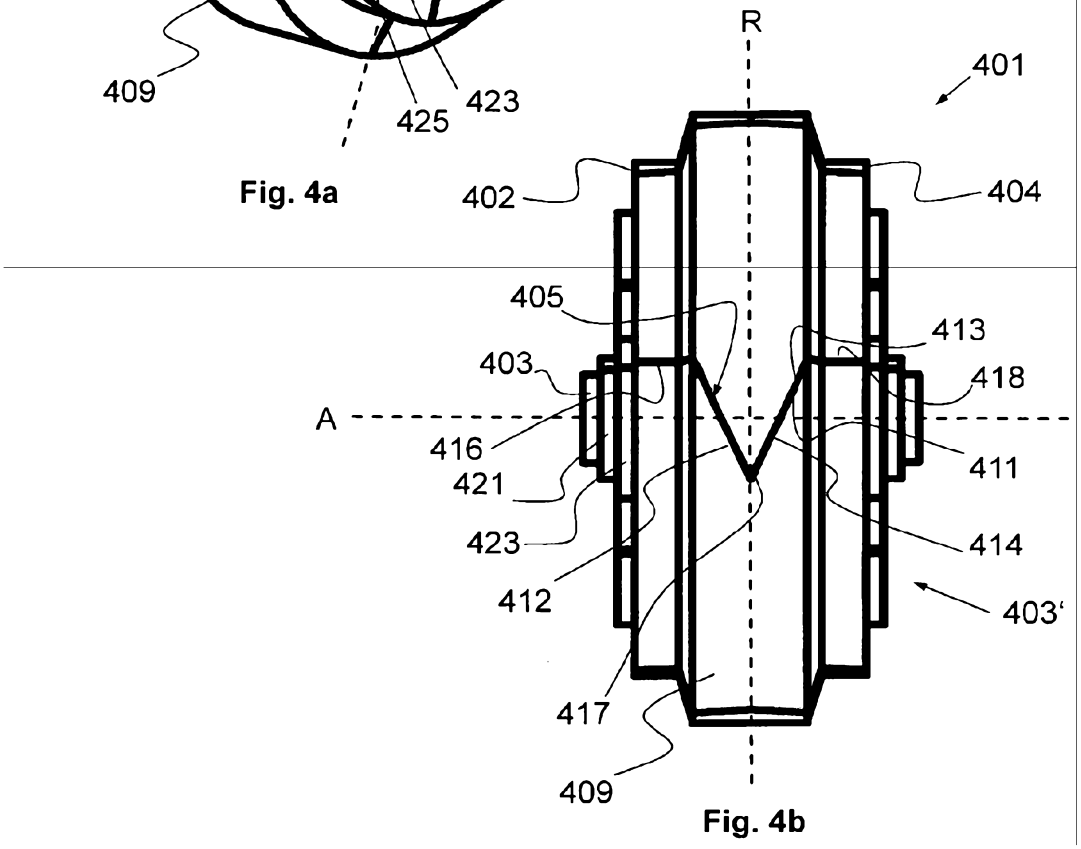
R
401
402
404
405
413
403
418
A
416
411
421
423
414
412
403'
417
409

Fig. 4b

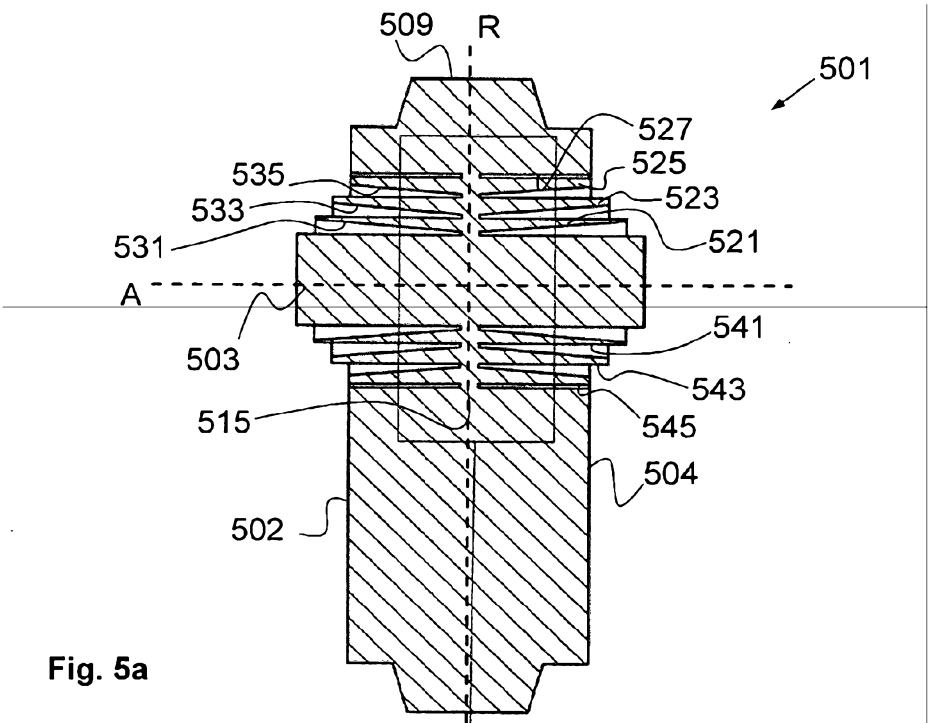
509
R
501
527
525
535
523
533
521
531
A
503
541
543
515
545
504
502

Fig. 5a

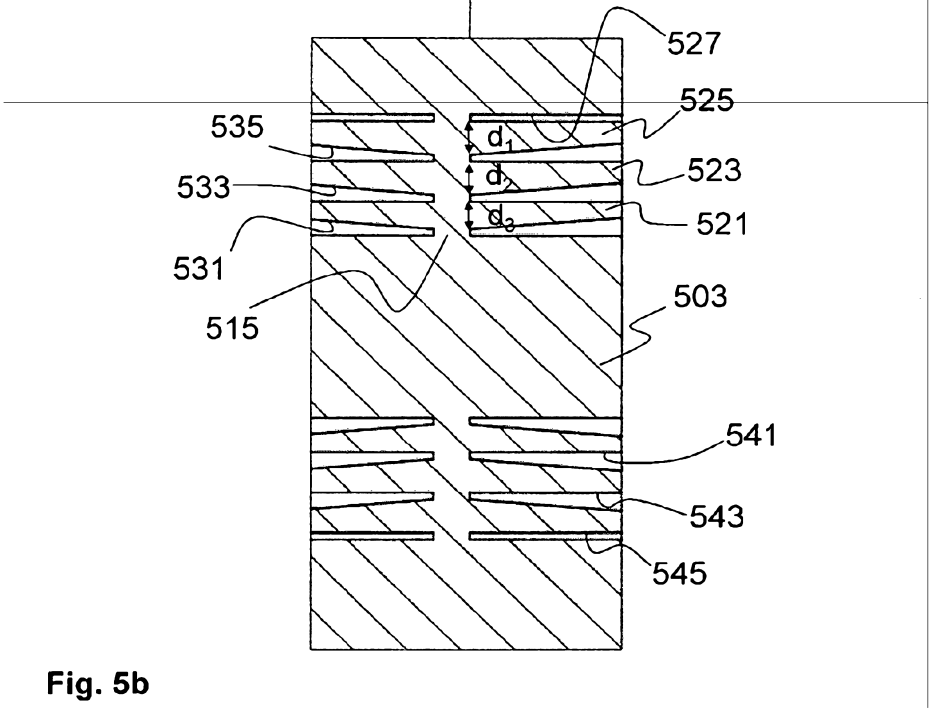
527
525
535
d_1
523
533
d_2
521
d_3
531
503
515
541
543
545

Fig. 5b

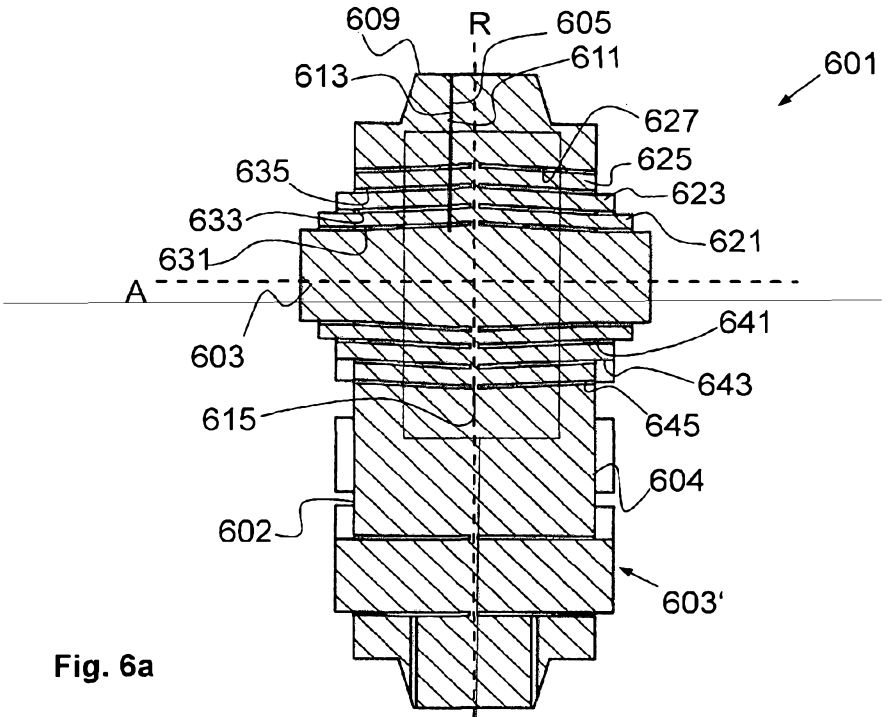
609
R
605
611
601
613
627
625
635
623
633
621
631
A
641
603
643
615
645
604
602
603'

Fig. 6a

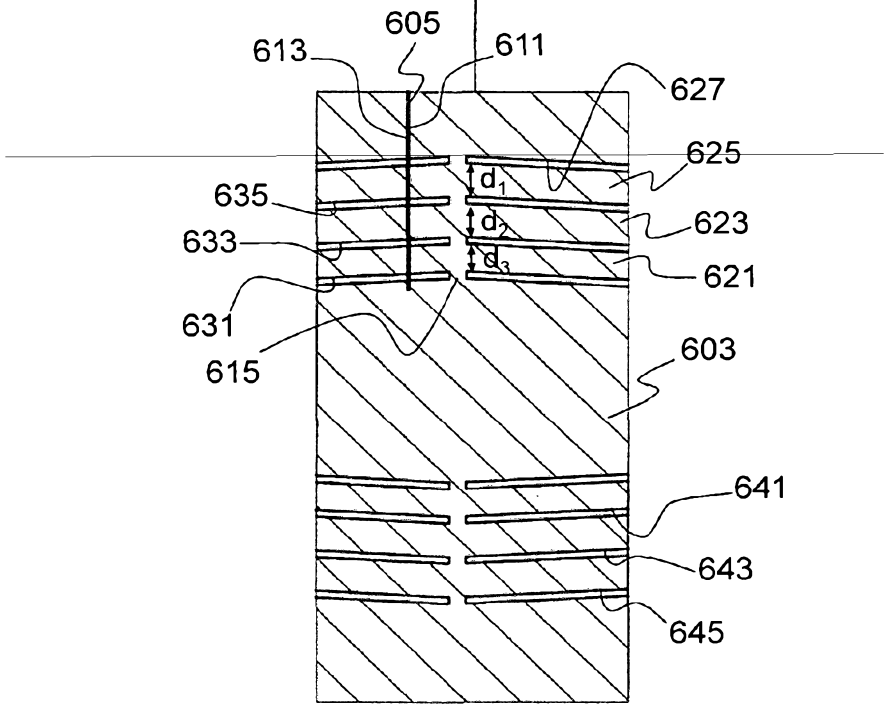
605
613
611
627
625
635
d_1
623
633
d_2
d_3
621
631
603
615
641
643
645

Fig. 6b

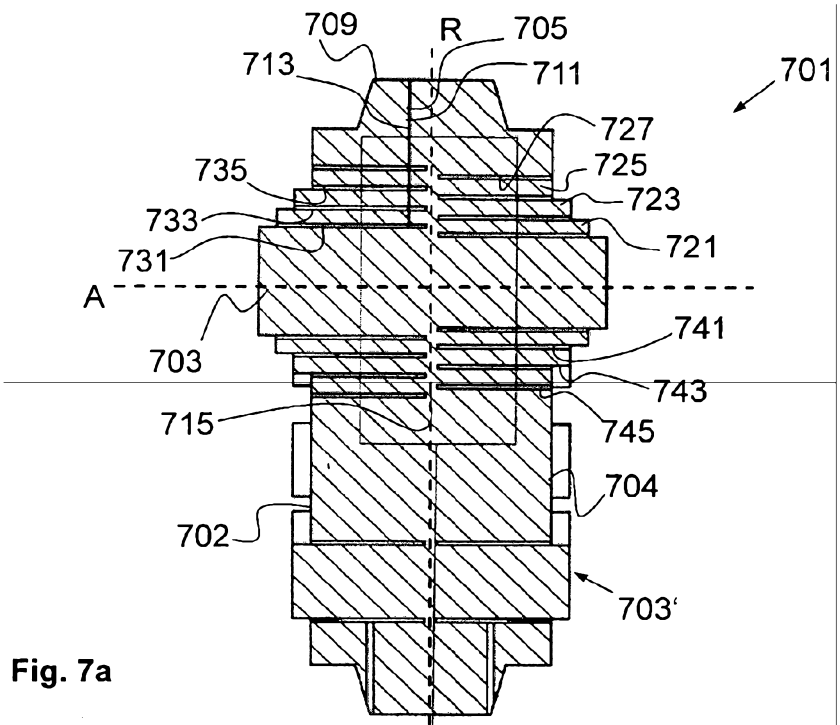
709
R
705
713
711
701
727
735
725
723
733
721
731
A
741
703
743
715
745
704
702
703'

Fig. 7a

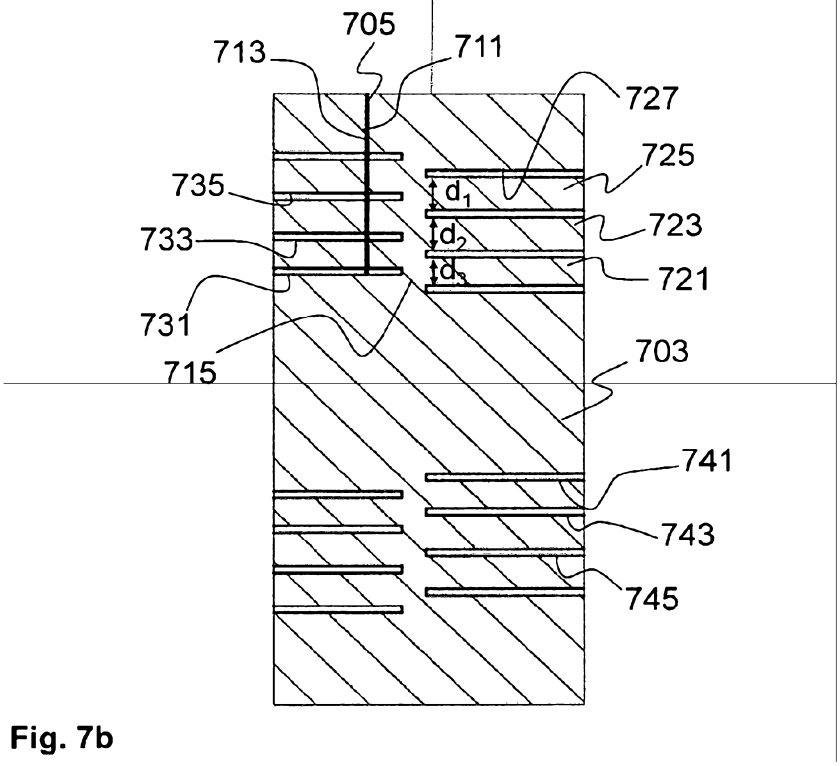
705
713
711
727
725
735
d_1
733
d_2
723
d_3
721
731
703
715
741
743
745

Fig. 7b

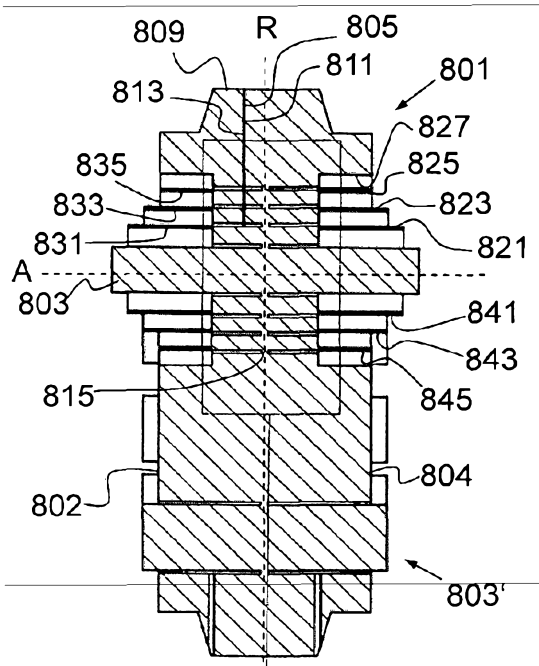

Fig. 8a

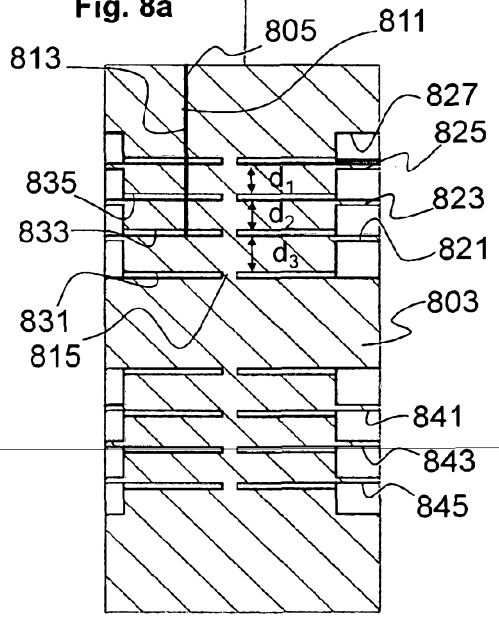

Fig. 8b

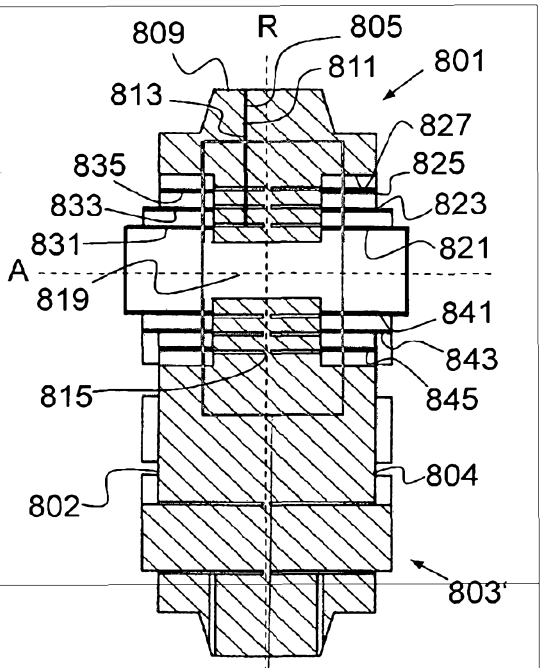

Fig. 8c

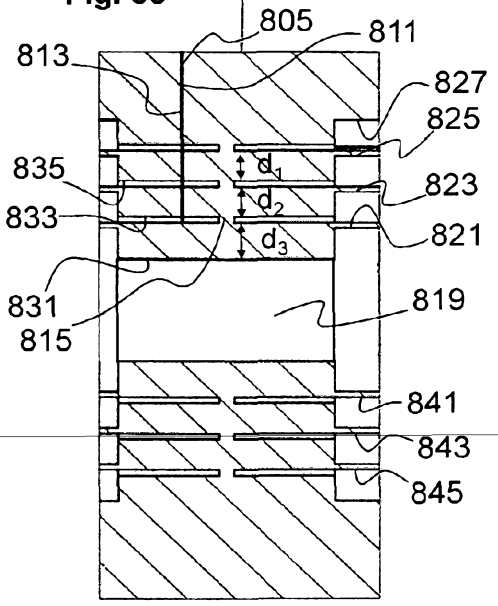

Fig. 8d