(12) INTERNATIONAL APPLICATION PUBLISHED UNDER THE PATENT COOPERATION TREATY (PCT)

(19) World Intellectual Property Organization
International Bureau

(43) International Publication Date
30 January 2014 (30.01.2014)

(10) International Publication Number
WO 2014/018455 A1

(51) International Patent Classification:
B81B 7/00 (2006.01)

(21) International Application Number:
PCT/US2013/051516

(22) International Filing Date:
22 July 2013 (22.07.2013)

(25) Filing Language: English

(26) Publication Language: English

(30) Priority Data:
13/557,061 24 July 2012 (24.07.2012) US

(71) Applicant: QUALCOMM MEMS TECHNOLOGIES, INC. [US/US]; ATTN: International IP Administration, 5775 Morehouse Drive, San Diego, California 92121-1714 (US).

(72) Inventors: FENNELL, Leonard Eugene; 5775 Morehouse Drive, San Diego, California 92121-1714 (US). **KAO, Tsongming**; 5775 Morehouse Drive, San Diego, California 92121-1714 (US). **SASAGAWA, Teruo**; 5775 Morehouse Drive, San Diego, California 92121-1714 (US). **PATEL, Sapna**; 5775 Morehouse Drive, San Diego, California 92121-1714 (US). **WANG, Hung-Jen**; 5775 Morehouse Drive, San Diego, California 92121-1714 (US).

(74) Agent: ABUMERI, Mark M.; Knobbe Martens Olson & Bear LLP, 2040 Main Street, Fourteenth Floor, Irvine, California 92614 (US).

(81) Designated States *(unless otherwise indicated, for every kind of national protection available)*: AE, AG, AL, AM, AO, AT, AU, AZ, BA, BB, BG, BH, BN, BR, BW, BY, BZ, CA, CH, CL, CN, CO, CR, CU, CZ, DE, DK, DM, DO, DZ, EC, EE, EG, ES, FI, GB, GD, GE, GH, GM, GT, HN, HR, HU, ID, IL, IN, IS, JP, KE, KG, KN, KP, KR, KZ, LA, LC, LK, LR, LS, LT, LU, LY, MA, MD, ME, MG, MK, MN, MW, MX, MY, MZ, NA, NG, NI, NO, NZ, OM, PA, PE, PG, PH, PL, PT, QA, RO, RS, RU, RW, SC, SD, SE, SG, SK, SL, SM, ST, SV, SY, TH, TJ, TM, TN, TR, TT, TZ, UA, UG, US, UZ, VC, VN, ZA, ZM, ZW.

(84) Designated States *(unless otherwise indicated, for every kind of regional protection available)*: ARIPO (BW, GH, GM, KE, LR, LS, MW, MZ, NA, RW, SD, SL, SZ, TZ, UG, ZM, ZW), Eurasian (AM, AZ, BY, KG, KZ, RU, TJ, TM), European (AL, AT, BE, BG, CH, CY, CZ, DE, DK, EE, ES, FI, FR, GB, GR, HR, HU, IE, IS, IT, LT, LU, LV, MC, MK, MT, NL, NO, PL, PT, RO, RS, SE, SI, SK, SM, TR), OAPI (BF, BJ, CF, CG, CI, CM, GA, GN, GQ, GW, KM, ML, MR, NE, SN, TD, TG).

Declarations under Rule 4.17:

— *as to applicant's entitlement to apply for and be granted a patent (Rule 4.17(ii))*

— *as to the applicant's entitlement to claim the priority of the earlier application (Rule 4.17(iii))*

Published:

— *with international search report (Art. 21(3))*

(54) Title: DEVICES AND METHODS FOR PROTECTING ELECTROMECHANICAL DEVICE ARRAYS

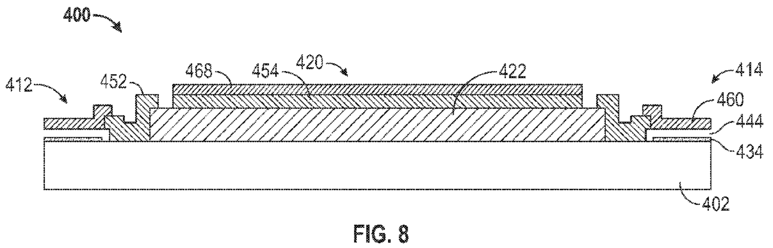

FIG. 8

(57) Abstract: This disclosure provides systems, methods and apparatus for protecting electromechanical systems (EMS) devices from mechanical interference. In one aspect, an array of EMS devices may include one or more regions in which an EMS device is replaced with a spacer structure, such that the overall height of the spacer structure is greater than the height of the surrounding EMS devices. In another aspect, resilient spacer structures can be formed overlying stable portions of an EMS device array. These resilient spacer structures may be formed from a cross-linked organic material.

WO 2014/018455 A1

DEVICES AND METHODS FOR PROTECTING ELECTROMECHANICAL DEVICE ARRAYS

TECHNICAL FIELD

[0001] This disclosure relates to methods and devices for protecting arrays of electromechanical systems (EMS) devices from mechanical interference.

DESCRIPTION OF THE RELATED TECHNOLOGY

[0002] EMS include devices having electrical and mechanical elements, actuators, transducers, sensors, optical components such as mirrors and optical films, and electronics. EMS devices or elements can be manufactured at a variety of scales including, but not limited to, microscales and nanoscales. For example, microelectromechanical systems (MEMS) devices can include structures having sizes ranging from about a micron to hundreds of microns or more. Nanoelectromechanical systems (NEMS) devices can include structures having sizes smaller than a micron including, for example, sizes smaller than several hundred nanometers. Electromechanical elements may be created using deposition, etching, lithography, and/or other micromachining processes that etch away parts of substrates and/or deposited material layers, or that add layers to form electrical and electromechanical devices.

[0003] One type of EMS device is called an interferometric modulator (IMOD). The term IMOD or interferometric light modulator refers to a device that selectively absorbs and/or reflects light using the principles of optical interference. In some implementations, an IMOD display element may include a pair of conductive plates, one or both of which may be transparent and/or reflective, wholly or in part, and capable of relative motion upon application of an appropriate electrical signal. For example, one plate may include a stationary layer deposited over, on or supported by a substrate and the other plate may include a reflective membrane separated from the stationary layer by an air gap. The position of one plate in relation to another can change the optical interference of light incident on the IMOD display element. IMOD-based display devices have a wide range of applications, and are anticipated to be used in improving existing products and creating new products, especially those with display capabilities.

[0004] EMS devices such as IMOD devices are susceptible to mechanical and environmental damage, and may be protected from such damage by packaging the EMS devices using a backplate sealed to a substrate supporting the EMS devices. However, as the package thickness decreases, a risk of mechanical interference from flexure of the backplate increases. Additional device components may be incorporated into the package in order to protect the EMS devices from mechanical interference from a backplate.

SUMMARY

[0005] The systems, methods and devices of this disclosure each have several innovative aspects, no single one of which is solely responsible for the desirable attributes disclosed herein.

[0006] One innovative aspect of the subject matter described in this disclosure can be implemented in a device, including a conductive layer supported by an underlying substrate, a movable layer overlying at least a portion of the conductive layer, a plurality of support structures underlying at least a portion of the movable layer and spacing the movable layer apart from the conductive layer by a cavity, where the plurality of post structures are anchored to an underlying layer at anchor locations, and a spacer layer disposed in an area between anchor locations, where the spacer structure underlies a first layer including the same material as the support structures and a second layer including the same material as the movable layer, where the upper surface of the second layer overlying the spacer layer is located at a greater height from the surface of the substrate than the remainder of the device.

[0007] In some implementations, the conductive layer can be conductive absorber layer. In some implementations, the device can additional include a masking structure extending underneath at least the anchor locations and the spacer layer. In some further implementations, the masking structure can include an interferometric black mask.

[0008] In some implementations, the first layer can extend between at least a first anchor location and a second anchor location. In some further implementations, the first layer can extend between four adjacent anchor locations.

[0009] In some implementations, the device can additionally include an additional spacer structure overlying a portion of the device, where the additional spacer structure includes an organic material. In some further implementations, the additional spacer structure can overlie a support structure, and where the additional spacer structure does not extend outward beyond the edges of the anchor location underlying the support structure. In some further implementations, the additional spacer structure can overlie the spacer layer, and where the additional spacer structure does not extend outward beyond the edges of the spacer layer.

[0010] Another innovative aspect of the subject matter described in this disclosure can be implemented in a device, including an array of interferometric modulators (IMODs) arranged as a plurality of pixels, where the array includes a first portion of the array defining a first pixel, the first pixel including a plurality of IMODs configured to reflect light of a first color, and a plurality of IMODs configured to reflect light of a second color, and a second portion of the array defining a second pixel, where the second portion of the array is substantially similar in size to the first portion of the array, the second pixel including at least one less IMOD configured to reflect light of a first color than the first pixel, where the second pixel further includes a spacer disposed within the second portion of the array, and where the spacer extends to a height higher than the remainder of the second pixel.

[0011] In some implementations, the first color of light can be blue and the second color of light can be red, where the first pixel further includes a plurality of IMODs configured to reflect green light. In some implementations, the device can additionally include an interferometric black mask underlying at least a portion of the spacer. In some implementations, the device can include an oxide.

[0012] Another innovative aspect of the subject matter described in this disclosure can be implemented in a method of fabricating a device, including forming at least one spacer over a substrate, forming a sacrificial layer over the spacer, patterning the sacrificial layer to include a plurality of apertures, where at least one of the plurality of apertures extends over the spacer, forming a support layer over the patterned sacrificial layer, and patterning the support layer to form support structures, where a portion of the support layer overlying the spacer remains in place.

[0013] In some implementations, the method can additionally include forming a movable layer after patterning the support layer to form support structures, and patterning the movable layer, where a portion of the movable layer overlying the spacer remains in place.

[0014] In some implementations, the method can additionally include forming a conductive layer over the substrate prior to forming the sacrificial layer. In some further implementations, the method can additionally include forming a buffer layer over at least the conductive layer and the spacer. In some further implementations, the method can additionally include forming an interferometric black mask over the substrate, where the interferometric black mask is formed over the masking structure.

[0015] Another innovative aspect of the subject matter described in this disclosure can be implemented in a device, including a conductive layer supported by an underlying substrate, a movable layer overlying at least a portion of the conductive layer, a plurality of support structures underlying at least a portion of the movable layer and spacing the movable layer apart from the conductive layer by a cavity, where the plurality of post structures are anchored to an underlying layer at anchor locations, and means for raising the height of overlying layers, where the raising means underlies a first layer including the same material as the support structures and a second layer including the same material as the mechanical layer, where the upper surface of the second layer overlying the raising means is located at a greater height from the surface of the substrate than the remainder of the device.

[0016] In some implementations, the raising means can include a spacer layer disposed in an area between anchor locations.

[0017] Another innovative aspect of the subject matter described in this disclosure can be implemented in a device, including a conductive layer supported by an underlying substrate, a movable layer overlying at least a portion of the conductive layer, a plurality of support structures underlying at least a portion of the mechanical layer and spacing the movable layer apart from the conductive layer by a cavity, where the plurality of post structures are anchored to an underlying layer at anchor locations, and a spacer overlying at least one support structure, where the spacer includes an organic material, and where a base of the spacer does not extend outward beyond the edges of the anchor location underlying the support structure.

[0018] In some implementations, the spacer can include a cross-linked organic material. In some implementations, the conductive layer can include an optical absorber, and at least a portion of the movable layer adjacent the cavity can include a reflective material.

[0019] Details of one or more implementations of the subject matter described in this disclosure are set forth in the accompanying drawings and the description below. Although the examples provided in this disclosure are primarily described in terms of EMS and MEMS-based displays the concepts provided herein may apply to other types of displays such as liquid crystal displays, organic light-emitting diode ("OLED") displays, and field emission displays. Other features, aspects, and advantages will become apparent from the description, the drawings and the claims. Note that the relative dimensions of the following figures may not be drawn to scale.

BRIEF DESCRIPTION OF THE DRAWINGS

[0020] **Figure 1** is an isometric view illustration depicting two adjacent interferometric modulator (IMOD) display elements in a series or array of display elements of an IMOD display device.

[0021] **Figure 2** is a system block diagram illustrating an electronic device incorporating an IMOD-based display including a three element by three element array of IMOD display elements.

[0022] **Figure 3** is a flow diagram illustrating a manufacturing process for an IMOD display or display element.

[0023] **Figures 4A–4E** are cross-sectional illustrations of various stages in a process of making an IMOD display or display element.

[0024] **Figures 5A** and **5B** are schematic exploded partial perspective views of a portion of an electromechanical systems (EMS) package including an array of EMS elements and a backplate.

[0025] **Figure 6A** shows an example of a schematic illustration of an interferometric modulator pixel.

[0026] **Figure 6B** shows an example of a schematic illustration of an interferometric modulator pixel in which one of the subpixels has been replaced with a spacer structure.

[0027] **Figure 6C** is a perspective view schematically illustrating an array of interferometric modulators disposed on a substrate in which at least one subpixel has been replaced by a spacer structure.

[0028] **Figures 7A–7E** show an example of a fabrication process which can be used to form a spacer structure within an array of interferometric modulators.

[0029] **Figure 8** shows an example of a cross-section of another implementation of spacer structure within an array of interferometric modulators.

[0030] **Figure 9** shows an example of a block diagram illustrating a method of fabricating an array of interferometric modulators including at least one spacer structure disposed within the array.

[0031] **Figure 10** shows an example of a cross-section of a portion of an array of interferometric modulators in which a spacer structure overlies a portion of a support structure.

[0032] **Figures 11A–11D** show an example of a fabrication process which can be used to form an overlying spacer structure within an array of interferometric modulators.

[0033] **Figure 12** shows an example of a block diagram illustrating a method of fabricating an array of interferometric modulators including at least one spacer overlying a support structure.

[0034] **Figure 13** shows an example of an interferometric modulator array which includes both a spacer structure which replaces a subpixel of the array and an additional spacer structure overlying the subpixel-replacing spacer structure.

[0035] **Figures 14A** and **14B** are system block diagrams illustrating a display device that includes a plurality of IMOD display elements.

[0036] Like reference numbers and designations in the various drawings indicate like elements.

DETAILED DESCRIPTION

[0037] The following description is directed to certain implementations for the purposes of describing the innovative aspects of this disclosure. However, a person having ordinary skill in the art will readily recognize that the teachings herein can be applied in a multitude of different ways. The described implementations may be implemented in any device, apparatus, or system that can be configured to display an image, whether in motion (such as video) or stationary (such as still images), and whether textual, graphical or pictorial. More particularly, it is contemplated that the described implementations may be included in or associated with a variety of electronic devices such as, but not limited to: mobile telephones, multimedia Internet enabled cellular telephones, mobile television receivers, wireless devices, smartphones, Bluetooth® devices, personal data assistants (PDAs), wireless electronic mail receivers, hand-held or portable computers, netbooks, notebooks, smartbooks, tablets, printers, copiers, scanners, facsimile devices, global positioning system (GPS) receivers/navigators, cameras, digital media players (such as MP3 players), camcorders, game consoles, wrist watches, clocks, calculators, television monitors, flat panel displays, electronic reading devices (e.g., e-readers), computer monitors, auto displays (including odometer and speedometer displays, etc.), cockpit controls and/or displays, camera view displays (such as the display of a rear view camera in a vehicle), electronic photographs, electronic billboards or signs, projectors, architectural structures, microwaves, refrigerators, stereo systems, cassette recorders or players, DVD players, CD players, VCRs, radios, portable memory chips, washers, dryers, washer/dryers, parking meters, packaging (such as in electromechanical systems (EMS) applications including microelectromechanical systems (MEMS) applications, as well as non-EMS applications), aesthetic structures (such as display of images on a piece of jewelry or clothing) and a variety of EMS devices. The teachings herein also can be used in non-display applications such as, but not limited to, electronic switching devices, radio frequency filters, sensors, accelerometers, gyroscopes, motion-sensing devices, magnetometers, inertial components for consumer electronics, parts of consumer electronics products, varactors, liquid crystal devices, electrophoretic devices, drive schemes, manufacturing processes and electronic test equipment. Thus, the teachings are not intended to be limited to the implementations depicted solely in the Figures, but instead have wide applicability as will be readily apparent to one having ordinary skill in the art.

[0038] Because some EMS devices, such as interferometric modulators (IMODs), may be monolithically fabricated on a supporting substrate, additional protection from mechanical and environmental interference may be provided via an overlying protective backplate which forms part of an EMS device package. Even with a backplate in place, however, flexure of the backplate between supports can bring the backplate into contact with the EMS devices unless sufficient support for the backplate and/or spacing between the backplate and the EMS devices is provided. By dispersing spacers throughout an array of EMS devices, the necessary spacing between the backplate and the EMS devices can be reduced, and the thickness of the EMS device package can be reduced. In some devices, the spacers may be provided within an EMS device array without reducing the fill factor of the EMS devices by disposing spacers on top of EMS device elements, such as support structures. However, as the size of the EMS devices is reduced, and the density of the devices within an array increases, increased reliability of such spacers is needed, or an alternative placement of such spacers. In some devices, EMS devices of a certain type, such as blue subpixels in an interferometric modulator array, may be replaced with spacers. In other devices, particular organic materials may be used in spacers on support structures to increase the reliability of these spacers.

[0039] Particular implementations of the subject matter described in this disclosure can be implemented to realize one or more of the following potential advantages. By replacing blue interferometric modulator elements with spacer structures, spacers may be dispersed throughout an array of interferometric modulators while having a minimal effect on the brightness of the interferometric modulator display, since the blue pixels contribute less brightness to the display than red or green pixels. The fabrication of these “blue-pixel” support structures can be integrated into the manufacturing process of the display through the deposition of a single additional layer, as existing layers can be used to form part of the “blue-pixel” spacer. Similarly, by using overlying organic spacers on top of support structures or other structures, more reliable and resilient spacers can be provided. The implementation of spacers can prevent or reduce the damage to the interferometric modulators arising from contact with packaging. In some implementations, spacers enable the use of devices having thinner packaging than can be used for devices that are manufactured without spacers.

[0040] An example of a suitable EMS or MEMS device or apparatus, to which the described implementations may apply, is a reflective display device. Reflective display devices can incorporate interferometric modulator (IMOD) display elements that can be implemented to selectively absorb and/or reflect light incident thereon using principles of optical interference. IMOD display elements can include a partial optical absorber, a reflector that is movable with respect to the absorber, and an optical resonant cavity defined between the absorber and the reflector. In some implementations, the reflector can be moved to two or more different positions, which can change the size of the optical resonant cavity and thereby affect the reflectance of the IMOD. The reflectance spectra of IMOD display elements can create fairly broad spectral bands that can be shifted across the visible wavelengths to generate different colors. The position of the spectral band can be adjusted by changing the thickness of the optical resonant cavity. One way of changing the optical resonant cavity is by changing the position of the reflector with respect to the absorber.

[0041] **Figure 1** is an isometric view illustration depicting two adjacent interferometric modulator (IMOD) display elements in a series or array of display elements of an IMOD display device. The IMOD display device includes one or more interferometric EMS, such as MEMS, display elements. In these devices, the interferometric MEMS display elements can be configured in either a bright or dark state. In the bright ("relaxed," "open" or "on," etc.) state, the display element reflects a large portion of incident visible light. Conversely, in the dark ("actuated," "closed" or "off," etc.) state, the display element reflects little incident visible light. MEMS display elements can be configured to reflect predominantly at particular wavelengths of light allowing for a color display in addition to black and white. In some implementations, by using multiple display elements, different intensities of color primaries and shades of gray can be achieved.

[0042] The IMOD display device can include an array of IMOD display elements which may be arranged in rows and columns. Each display element in the array can include at least a pair of reflective and semi-reflective layers, such as a movable reflective layer (i.e., a movable layer, also referred to as a mechanical layer) and a fixed partially reflective layer (i.e., a stationary layer), positioned at a variable and controllable distance from each other to form an air gap (also referred to as an optical gap, cavity or optical resonant cavity). The movable reflective layer may be moved between at least two positions. For example, in a first position, i.e., a relaxed position, the movable reflective layer can be positioned at a distance from the fixed partially reflective layer. In a second position, i.e., an actuated position, the movable reflective layer can be positioned more closely to the partially reflective layer. Incident light that reflects from the two layers can interfere constructively and/or destructively depending on the position of the movable reflective layer and the wavelength(s) of the incident light, producing either an overall reflective or non-reflective state for each display element. In some implementations, the display element may be in a reflective state when unactuated, reflecting light within the visible spectrum, and may be in a dark state when actuated, absorbing and/or destructively interfering light within the visible range. In some other implementations, however, an IMOD display element may be in a dark state when unactuated, and in a reflective state when actuated. In some implementations, the introduction of an applied voltage can drive the display elements to change states. In some other implementations, an applied charge can drive the display elements to change states.

[0043] The depicted portion of the array in **Figure 1** includes two adjacent interferometric MEMS display elements in the form of IMOD display elements **12**. In the display element **12** on the right (as illustrated), the movable reflective layer **14** is illustrated in an actuated position near, adjacent or touching the optical stack **16**. The voltage V_{bias} applied across the display element **12** on the right is sufficient to move and also maintain the movable reflective layer **14** in the actuated position. In the display element **12** on the left (as illustrated), a movable reflective layer **14** is illustrated in a relaxed position at a distance (which may be predetermined based on design parameters) from an optical stack **16**, which includes a partially reflective layer. The voltage V_0 applied across the display element **12** on the left is insufficient to cause actuation of the movable reflective layer **14** to an actuated position such as that of the display element **12** on the right.

[0044] In **Figure 1**, the reflective properties of IMOD display elements **12** are generally illustrated with arrows indicating light **13** incident upon the IMOD display elements **12**, and light **15** reflecting from the display element **12** on the left. Most of the light **13** incident upon the display elements **12** may be transmitted through the transparent substrate **20**, toward the optical stack **16**. A portion of the light incident upon the optical stack **16** may be transmitted through the partially reflective layer of the optical stack **16**, and a portion will be reflected back through the transparent substrate **20**. The portion of light **13** that is transmitted through the optical stack **16** may be reflected from the movable reflective layer **14**, back toward (and through) the transparent substrate **20**. Interference (constructive and/or destructive) between the light reflected from the partially reflective layer of the optical stack **16** and the light reflected from the movable reflective layer **14** will determine in part the intensity of wavelength(s) of light **15** reflected from the display element **12** on the viewing or substrate side of the device. In some implementations, the transparent substrate **20** can be a glass substrate (sometimes referred to as a glass plate or panel). The glass substrate may be or include, for example, a borosilicate glass, a soda lime glass, quartz, Pyrex, or other suitable glass material. In some implementations, the glass substrate may have a thickness of 0.3, 0.5 or 0.7 millimeters, although in some implementations the glass substrate can be thicker (such as tens of millimeters) or thinner (such as less than 0.3 millimeters). In some implementations, a non-glass substrate can be used, such as a polycarbonate, acrylic, polyethylene terephthalate (PET) or polyether ether ketone (PEEK) substrate. In such an implementation, the non-glass substrate will likely have a thickness of less than 0.7 millimeters, although the substrate may be thicker depending on the design considerations. In some implementations, a non-transparent substrate, such as a metal foil or stainless steel-based substrate can be used. For example, a reverse-IMOD-based display, which includes a fixed reflective layer and a movable layer which is partially transmissive and partially reflective, may be configured to be viewed from the opposite side of a substrate as the display elements **12** of **Figure 1** and may be supported by a non-transparent substrate.

[0045] The optical stack **16** can include a single layer or several layers. The layer(s) can include one or more of an electrode layer, a partially reflective and partially transmissive layer, and a transparent dielectric layer. In some implementations, the optical stack **16** is electrically conductive, partially transparent and partially reflective, and may be fabricated, for example, by depositing one or more of the above layers onto a transparent substrate **20**. The electrode layer can be formed from a variety of materials, such as various metals, for example indium tin oxide (ITO). The partially reflective layer can be formed from a variety of materials that are partially reflective, such as various metals (e.g., chromium and/or molybdenum), semiconductors, and dielectrics. The partially reflective layer can be formed of one or more layers of materials, and each of the layers can be formed of a single material or a combination of materials. In some implementations, certain portions of the optical stack **16** can include a single semi-transparent thickness of metal or semiconductor which serves as both a partial optical absorber and electrical conductor, while different, electrically more conductive layers or portions (e.g., of the optical stack **16**

or of other structures of the display element) can serve to bus signals between IMOD display elements. The optical stack **16** also can include one or more insulating or dielectric layers covering one or more conductive layers or an electrically conductive/partially absorptive layer.

[0046] In some implementations, at least some of the layer(s) of the optical stack **16** can be patterned into parallel strips, and may form row electrodes in a display device as described further below. As will be understood by one having ordinary skill in the art, the term “patterned” is used herein to refer to masking as well as etching processes. In some implementations, a highly conductive and reflective material, such as aluminum (Al), may be used for the movable reflective layer **14**, and these strips may form column electrodes in a display device. The movable reflective layer **14** may be formed as a series of parallel strips of a deposited metal layer or layers (orthogonal to the row electrodes of the optical stack **16**) to form columns deposited on top of supports, such as the illustrated posts **18**, and an intervening sacrificial material located between the posts **18**. When the sacrificial material is etched away, a defined gap **19**, or optical cavity, can be formed between the movable reflective layer **14** and the optical stack **16**. In some implementations, the spacing between posts **18** may be approximately 1–1000 μm, while the gap **19** may be approximately less than 10,000 Angstroms (Å).

[0047] In some implementations, each IMOD display element, whether in the actuated or relaxed state, can be considered as a capacitor formed by the fixed and moving reflective layers. When no voltage is applied, the movable reflective layer **14** remains in a mechanically relaxed state, as illustrated by the display element **12** on the left in **Figure 1**, with the gap **19** between the movable reflective layer **14** and optical stack **16**. However, when a potential difference, i.e., a voltage, is applied to at least one of a selected row and column, the capacitor formed at the intersection of the row and column electrodes at the corresponding display element becomes charged, and electrostatic forces pull the electrodes together. If the applied voltage exceeds a threshold, the movable reflective layer **14** can deform and move near or against the optical stack **16**. A dielectric layer (not shown) within the optical stack **16** may prevent shorting and control the separation distance between the layers **14** and **16**, as illustrated by the actuated display element **12** on the right in **Figure 1**. The behavior can be the same regardless of the polarity of the applied potential difference. Though a series of display elements in an array may be referred to in some instances as “rows” or “columns,” a person having ordinary skill in the art will readily understand that referring to one direction as a “row” and another as a “column” is arbitrary. Restated, in some orientations, the rows can be considered columns, and the columns considered to be rows. In some implementations, the rows may be referred to as “common” lines and the columns may be referred to as “segment” lines, or vice versa. Furthermore, the display elements may be evenly arranged in orthogonal rows and columns (an “array”), or arranged in non-linear configurations, for example, having certain positional offsets with respect to one another (a “mosaic”). The terms “array” and “mosaic” may refer to either configuration. Thus, although the display is referred to as including an “array” or “mosaic,” the elements themselves need not be arranged orthogonally to one another, or disposed in an even distribution, in any instance, but may include arrangements having asymmetric shapes and unevenly distributed elements.

[0048] **Figure 2** is a system block diagram illustrating an electronic device incorporating an IMOD-based display including a three element by three element array of IMOD display elements. The electronic device includes a processor **21** that may be configured to execute one or more software modules. In addition to executing an operating system, the processor **21** may be configured to execute one or more software applications, including a web browser, a telephone application, an email program, or any other software application.

[0049] The processor **21** can be configured to communicate with an array driver **22**. The array driver **22** can include a row driver circuit **24** and a column driver circuit **26** that provide signals to, for example a display array or panel **30**. The cross section of the IMOD display device illustrated in **Figure 1** is shown by the lines **1–1** in Figure **2**. Although **Figure 2** illustrates a 3x3 array of IMOD display elements for the sake of clarity, the display array **30** may contain a very large number of IMOD display elements, and may have a different number of IMOD display elements in rows than in columns, and vice versa.

[0050] **Figure 3** is a flow diagram illustrating a manufacturing process **80** for an IMOD display or display element. **Figures 4A–4E** are cross-sectional illustrations of various stages in the manufacturing process **80** for making an IMOD display or display element. In some implementations, the manufacturing process **80** can be implemented to manufacture one or more EMS devices, such as IMOD displays or display elements. The manufacture of such an EMS device also can include other blocks not shown in **Figure 3**. The process **80** begins at block **82** with the formation of the optical stack **16** over the substrate **20**. **Figure 4A** illustrates such an optical stack **16** formed over the substrate **20**. The substrate **20** may be a transparent substrate such as glass or plastic such as the materials discussed above with respect to **Figure 1**. The substrate **20** may be flexible or relatively stiff and unbending, and may have been subjected to prior preparation processes, such as cleaning, to facilitate efficient formation of the optical stack **16**. As discussed above, the optical stack **16** can be electrically conductive, partially transparent, partially reflective, and partially absorptive, and may be fabricated, for example, by depositing one or more layers having the desired properties onto the transparent substrate 20.

[0051] In **Figure 4A**, the optical stack **16** includes a multilayer structure having sub-layers **16a** and **16b**, although more or fewer sub-layers may be included in some other implementations. In some implementations, one of the sub-layers **16a** and **16b** can be configured with both optically absorptive and electrically conductive properties, such as the combined conductor/absorber sub-layer **16a**. In some implementations, one of the sub-layers **16a** and **16b** can include molybdenum-chromium (molychrome or MoCr), or other materials with a suitable complex refractive index. Additionally, one or more of the sub-layers **16a** and **16b** can be patterned into parallel strips, and may form row electrodes in a display device. Such patterning can be performed by a masking and etching process or another suitable process known in the art. In some implementations, one of the sub-layers **16a** and **16b** can be an insulating or dielectric layer, such as an upper sub-layer **16b** that is deposited over one or more underlying metal and/or oxide layers (such as one or more reflective and/or conductive layers). In addition, the optical stack **16** can be patterned into individual and parallel strips that form the rows of the display. In some implementations, at least one of the sub-layers of the optical stack, such as the optically absorptive layer, may be quite thin (e.g., relative to other layers depicted in this disclosure), even though the sub-layers **16a** and **16b** are shown somewhat thick in **Figures 4A–4E**.

[0052] The process **80** continues at block **84** with the formation of a sacrificial layer **25** over the optical stack **16**. Because the sacrificial layer **25** is later removed (see block **90**) to form the cavity **19**, the sacrificial layer **25** is not shown in the resulting IMOD display elements. **Figure 4B** illustrates a partially fabricated device including a sacrificial layer **25** formed over the optical stack **16**. The formation of the sacrificial layer **25** over the optical stack **16** may include deposition of a xenon difluoride (XeF_2)-etchable material such as molybdenum (Mo) or amorphous silicon (Si), in a thickness selected to provide, after subsequent removal, a gap or cavity **19** (see also **Figure 4E**) having a desired design size. Deposition of the sacrificial material may be carried out using deposition techniques such as physical vapor deposition (PVD, which includes many different techniques, such as sputtering), plasma-enhanced chemical vapor deposition (PECVD), thermal chemical vapor deposition (thermal CVD), or spin-coating.

[0053] The process **80** continues at block **86** with the formation of a support structure such as a support post **18**. The formation of the support post **18** may include patterning the sacrificial layer **25** to form a support structure aperture, then depositing a material (such as a polymer or an inorganic material, like silicon oxide) into the aperture to form the support post **18**, using a deposition method such as PVD, PECVD, thermal CVD, or spin-coating. In some implementations, the support structure aperture formed in the sacrificial layer can extend through both the sacrificial layer **25** and the optical stack **16** to the underlying substrate **20**, so that the lower end of the support post **18** contacts the substrate **20**. Alternatively, as depicted in **Figure 4C**, the aperture formed in the sacrificial layer **25** can extend through the sacrificial layer **25**, but not through the optical stack **16**. For example, **Figure 4E** illustrates the lower ends of the support posts **18** in contact with an upper surface of the optical stack **16**. The support post **18**, or other support structures, may be formed by depositing a layer of support structure material over the sacrificial layer **25** and patterning portions of the support structure material located away from apertures in the sacrificial layer **25**. The support structures may be located within the apertures, as illustrated in **Figure 4C**, but also can extend at least partially over a portion of the sacrificial layer **25**. As noted above, the patterning of the sacrificial layer **25** and/or the support posts

18 can be performed by a masking and etching process, but also may be performed by alternative patterning methods.

[0054] The process **80** continues at block **88** with the formation of a movable reflective layer or membrane such as the movable reflective layer **14** illustrated in **Figure 4D**. The movable reflective layer **14** may be formed by employing one or more deposition steps, including, for example, reflective layer (such as aluminum, aluminum alloy, or other reflective materials) deposition, along with one or more patterning, masking and/or etching steps. The movable reflective layer **14** can be patterned into individual and parallel strips that form, for example, the columns of the display. The movable reflective layer **14** can be electrically conductive, and referred to as an electrically conductive layer. In some implementations, the movable reflective layer **14** may include a plurality of sub-layers **14a**, **14b** and **14c** as shown in **Figure 4D**. In some implementations, one or more of the sub-layers, such as sub-layers **14a** and **14c**, may include highly reflective sub-layers selected for their optical properties, and another sub-layer **14b** may include a mechanical sub-layer selected for its mechanical properties. In some implementations, the mechanical sub-layer may include a dielectric material. Since the sacrificial layer **25** is still present in the partially fabricated IMOD display element formed at block **88**, the movable reflective layer **14** is typically not movable at this stage. A partially fabricated IMOD display element that contains a sacrificial layer **25** also may be referred to herein as an "unreleased" IMOD.

[0055] The process **80** continues at block **90** with the formation of a cavity **19**. The cavity **19** may be formed by exposing the sacrificial material **25** (deposited at block **84**) to an etchant. For example, an etchable sacrificial material such as Mo or amorphous Si may be removed by dry chemical etching by exposing the sacrificial layer **25** to a gaseous or vaporous etchant, such as vapors derived from solid XeF_2 for a period of time that is effective to remove the desired amount of material. The sacrificial material is typically selectively removed relative to the structures surrounding the cavity **19**. Other etching methods, such as wet etching and/or plasma etching, also may be used. Since the sacrificial layer **25** is removed during block **90**, the movable reflective layer **14** is typically movable after this stage. After removal of the sacrificial material **25**, the resulting fully or partially fabricated IMOD display element may be referred to herein as a “released” IMOD.

[0056] In some implementations, the packaging of an EMS component or device, such as an IMOD-based display, can include a backplate (alternatively referred to as a backplane, back glass or recessed glass) which can be configured to protect the EMS components from damage (such as from mechanical interference or potentially damaging substances). The backplate also can provide structural support for a wide range of components, including but not limited to driver circuitry, processors, memory, interconnect arrays, vapor barriers, product housing, and the like. In some implementations, the use of a backplate can facilitate integration of components and thereby reduce the volume, weight, and/or manufacturing costs of a portable electronic device.

[0057] **Figures 5A** and **5B** are schematic exploded partial perspective views of a portion of an EMS package **91** including an array **36** of EMS elements and a backplate **92**. **Figure 5A** is shown with two corners of the backplate **92** cut away to better illustrate certain portions of the backplate **92**, while **Figure 5B** is shown without the corners cut away. The EMS array **36** can include a substrate **20**, support posts **18**, and a movable layer **14**. In some implementations, the EMS array **36** can include an array of IMOD display elements with one or more optical stack portions **16** on a transparent substrate, and the movable layer 14 can be implemented as a movable reflective layer.

[0058] The backplate **92** can be essentially planar or can have at least one contoured surface (e.g., the backplate **92** can be formed with recesses and/or protrusions). The backplate **92** may be made of any suitable material, whether transparent or opaque, conductive or insulating. Suitable materials for the backplate **92** include, but are not limited to, glass, plastic, ceramics, polymers, laminates, metals, metal foils, Kovar and plated Kovar.

[0059] As shown in **Figures 5A** and **5B**, the backplate **92** can include one or more backplate components **94a** and **94b**, which can be partially or wholly embedded in the backplate **92**. As can be seen in **Figure 5A**, backplate component **94a** is embedded in the backplate **92**. As can be seen in **Figures 5A** and **5B**, backplate component **94b** is disposed within a recess **93** formed in a surface of the backplate **92**. In some implementations, the backplate components **94a** and/or **94b** can protrude from a surface of the backplate **92**. Although backplate component **94b** is disposed on the side of the backplate **92** facing the substrate **20**, in other implementations, the backplate components can be disposed on the opposite side of the backplate **92**.

[0060] The backplate components **94a** and/or **94b** can include one or more active or passive electrical components, such as transistors, capacitors, inductors, resistors, diodes, switches, and/or integrated circuits (ICs) such as a packaged, standard or discrete IC. Other examples of backplate components that can be used in various implementations include antennas, batteries, and sensors such as electrical, touch, optical, or chemical sensors, or thin-film deposited devices.

[0061] In some implementations, the backplate components **94a** and/or **94b** can be in electrical communication with portions of the EMS array **36**. Conductive structures such as traces, bumps, posts, or vias may be formed on one or both of the backplate **92** or the substrate **20** and may contact one another or other conductive components to form electrical connections between the EMS array **36** and the backplate components **94a** and/or **94b**. For example, **Figure 5B** includes one or more conductive vias **96** on the backplate **92** which can be aligned with electrical contacts **98** extending upward from the movable layers **14** within the EMS array **36**. In some implementations, the backplate **92** also can include one or more insulating layers that electrically insulate the backplate components **94a** and/or **94b** from other components of the EMS array **36**. In some implementations in which the backplate **92** is formed from vapor-permeable materials, an interior surface of backplate **92** can be coated with a vapor barrier (not shown).

[0062] The backplate components **94a** and **94b** can include one or more desiccants which act to absorb any moisture that may enter the EMS package **91**. In some implementations, a desiccant (or other moisture absorbing materials, such as a getter) may be provided separately from any other backplate components, for example as a sheet that is mounted to the backplate **92** (or in a recess formed therein) with adhesive. Alternatively, the desiccant may be integrated into the backplate **92**. In some other implementations, the desiccant may be applied directly or indirectly over other backplate components, for example by spray-coating, screen printing, or any other suitable method.

[0063] In some implementations, the EMS array **36** and/or the backplate **92** can include mechanical standoffs **97** to maintain a distance between the backplate components and the display elements and thereby prevent mechanical interference between those components. In the implementation illustrated in **Figures 5A** and **5B**, the mechanical standoffs 97 are formed as posts protruding from the backplate 92 in alignment with the support posts 18 of the EMS array 36. Alternatively or in addition, mechanical standoffs, such as rails or posts, can be provided along the edges of the EMS package 91.

[0064] Although not illustrated in **Figures 5A** and **5B**, a seal can be provided which partially or completely encircles the EMS array **36**. Together with the backplate **92** and the substrate **20**, the seal can form a protective cavity enclosing the EMS array **36**. The seal may be a semi-hermetic seal, such as a conventional epoxy-based adhesive. In some other implementations, the seal may be a hermetic seal, such as a thin film metal weld or a glass frit. In some other implementations, the seal may include polyisobutylene (PIB), polyurethane, liquid spin-on glass, solder, polymers, plastics, or other materials. In some implementations, a reinforced sealant can be used to form mechanical standoffs.

[0065] In alternate implementations, a seal ring may include an extension of either one or both of the backplate **92** or the substrate **20**. For example, the seal ring may include a mechanical extension (not shown) of the backplate **92**. In some implementations, the seal ring may include a separate member, such as an O-ring or other annular member.

[0066] In some implementations, the EMS array **36** and the backplate **92** are separately formed before being attached or coupled together. For example, the edge of the substrate **20** can be attached and sealed to the edge of the backplate **92** as discussed above. Alternatively, the EMS array **36** and the backplate **92** can be formed and joined together as the EMS package **91**. In some other implementations, the EMS package **91** can be fabricated in any other suitable manner, such as by forming components of the backplate **92** over the EMS array **36** by deposition.

[0067] The interferometric modulators described above have been described as bi-stable elements having a relaxed state and an actuated state. The above and following description, however, also may be used with analog interferometric modulators having a range of states. For example, an analog interferometric modulator can have a red state, a green state, a blue state, a black state and a white state in addition to other color states. Accordingly, a single interferometric modulator can be configured to have various states with different light reflectance properties over a wide range of the optical spectrum.

[0068] **Figure 6A** shows an example of a schematic illustration of an interferometric modulator pixel. In the illustrated implementation, the pixel **210** includes nine total subpixels arranged in a 3x3 array. Pixel **210** includes three subpixels **212a**, **212b** and **212c** configured to reflect red light, three subpixels **214a**, **214b** and **214c** configured to reflect green light, and three subpixels **216a**, **216b** and **216c** configured to reflect blue light. To facilitate driving of the pixel, the subpixels of the same color are arranged in a column, although any other arrangement of subpixels is possible. Similarly, pixels including more or less than nine subpixels may be used, and such pixels may include subpixels configured to reflect more or less than three total colors of light. Similarly, while the terms “pixel” and “subpixel” are used herein for convenience, the implementations discussed herein may be applied to non-optical devices, or to devices in which elements are arranged in other groupings.

[0069] **Figure 6B** shows an example of a schematic illustration of an interferometric modulator pixel in which one of the subpixels has been replaced with a spacer structure. The pixel **220** includes eight total subpixels and one spacer structure arranged in a 3x3 array. Pixel **220** includes three subpixels **222a**, **222b** and **222c** configured to reflect red light, three subpixels **224a**, **224b** and **224c** configured to reflect green light, two subpixels **226a** and **226b** configured to reflect blue light, and a spacer structure **228** which takes the place of the third blue subpixel **216c** of pixel **210** of **Figure 6A**.

[0070] **Figure 6C** is a perspective view schematically illustrating an array of interferometric modulators disposed on a substrate. The array **200** of interferometric modulators disposed on a substrate **202** includes 16 different pixels. Pixels **210** are 3x3 arrays of subpixels including three subpixels of each of red, green, and blue, such as the pixels **210** of **Figure 6A**. Pixels **220a** and **220b** are arrays including eight total subpixels and one spacer structure **228** arranged in a 3x3 array, such as the pixels **220** of **Figure 6B**. As schematically illustrated in **Figure 6C**, the height of the spacer structure **228** is higher than the height of the surrounding subpixels. A typical difference in height between the spacer structures **228** and the surrounding array is larger than 0.5 um, although the height differential in a particular implementation may depend on a variety of factors, including the number of spacer structures **228** within the array **200** and the spacing therebetween, as an increased height differential may be used to account for a lower density of spacer structures **228** within the array **200**.

[0071] In some other implementations, the number of pixels within an array may be larger or smaller than the 16 pixels shown in the implementation of **Figure 6C**, and in many implementations the number of pixels may be significantly larger. In some implementations, spacer structures can take the place of subpixels within a regularly-spaced arrangement, such as a grid, to form a regularly-spaced arrangement of subpixels and spacer structures. The relative density of "spacer pixels" such as pixels **220a** and **220b**, in which a subpixel is replaced with a spacer structure, also may be greater or less than in array **200** of **Figure 6C** and the distribution of such spacer pixels may be regular or may be arranged in an irregular pattern. For example, the number of spacer pixels may be increased near the center of the display to account for an increased flexure of an overlying backplate near a center of the backplate. In implementations in which the subpixels include analog interferometric modulators, a spacer structure need not take the place of an interferometric modulator dedicated to displaying a specific color, as the color reflected by the surrounding analog interferometric modulators can in some implementations altered to compensate for the replacement of an analog interferometric modulator with a spacer structure.

[0072] **Figures 7A–7E** show an example of a fabrication process which can be used to form a spacer structure within an array of interferometric modulators. In **Figure 7A**, one or more layers are deposited on a substrate **302** and patterned to form a masking structure referred to as a dark mask **310**. A layer of spacer material has also been deposited and patterned to form a spacer layer **322**. In the illustrated implementation, the dark mask **310** underlies the spacer layer **322** and extends laterally outward beyond the spacer layer **322**. Because portions of the resultant interferometric modulator array will be optically inactive, the dark mask **310** shields these structures from view, preventing or minimizing the undesirable optical effects that could result from reflection of light off of the undersides of structures within optically inactive areas, such as spacer layers **322** and support structures.

[0073] In one implementation, the dark mask **310** can be a black etalon, formed by depositing an absorber layer, a spacer layer, and a reflective layer, and patterning the three layers to form a stack of layers that reflects little or no visible light due to destructive interference between light reflected by the absorber layer and light passing through the absorber layer and reflected back through the absorber layer by the reflective layer. With proper selection of materials and thicknesses, a dark or black etalon can be formed. Such a dark or black etalon may alternately be referred to herein as an interferometric black mask.

[0074] The spacer layer **322** can be formed from a wide variety of suitable materials. In some implementations, the spacer layer **322** may be formed from a material used to form other materials in the display, in order to minimize the number of different materials used in the overall fabrication process. The material of the spacer material may be selectively etchable relative to the upper layer of the dark mask **310**. The thickness of the spacer structure may be selected such that the overall height of the resultant structure will be sufficiently taller than the surrounding portions of the array to protect the remainder of the array from mechanical interference. As discussed above, the particular height differential sufficient to provide this protection will depend on the spacing between spacer structures within the resultant array. The spacer layer **322** or similar structures described throughout the specification thus provide means for raising the height of overlying layers such as portions of a movable layer or portions of a layer of support material, although other layers also may overlie the spacer layer **322** in addition to or in place of these layers in other implementations. The spacer layer **322** can also provide means for rigidly supporting those overlying layers.

[0075] In some implementations, the dark mask **310** may be formed by depositing and patterning on or more layers prior to the deposition of the material which will form spacer layer **322**. In other implementations, the materials forming the dark mask **310** and the spacer layer **322** are deposited before the dark mask **310** is patterned, and the spacer layer **322** may be patterned before the dark mask **310** is patterned.

[0076] In **Figure 7B**, a buffer layer **332** is deposited over the dark mask **310** and spacer layer **322** to insulate conductive material within the dark mask **310** from other structures. A conductive layer is deposited and patterned to form electrodes **334**, and a dielectric layer **336** has been deposited over the electrodes **334** to electrically isolate the electrodes **334** from overlying conductive layers. Although in the illustrated implementation, the conductive layer which forms electrodes **334** has been removed from the area overlying spacer layer **322**, the conductive layer may in other implementations remain over all or part of the spacer layer **322**. Finally, a sacrificial layer **340** is deposited over the dielectric layer **336**.

[0077] In the illustrated implementation of a fabrication process for interferometric modulators, the conductive layer is a conductive absorber layer, and the electrode **334** serves as an optical absorber in addition to an electrode. In other implementations, however, where non-optical EMS devices are being fabricated, the conductive layer may only serve as an electrode, and the optical properties of the conductive layer may not be important to the operation of the EMS device.

[0078] In **Figure 7C**, the sacrificial layer **340** is patterned to form apertures by removing portions of the sacrificial layer corresponding to locations where support structures will subsequently be formed. In addition, a support layer **350** has been deposited over the patterned sacrificial layer **340**. In some implementations, the support layer **350** includes an oxide such as silicon oxide (SiO2), although a wide variety of suitable materials also may be used.

[0079] In some implementations, where the interferometric modulator array will include three different cavity sizes corresponding to interferometric modulators configured to reflect different colors, the sacrificial layer **340** may be a multilayer structure, formed by sequentially depositing and patterning three different sacrificial sublayers such that the sacrificial layer **340** has at least three different thicknesses across the sacrificial layer **340**.

[0080] In **Figure 7D**, the support layer **350** has been patterned to form support posts **352**, but in the areas overlying the spacer layer **322**, a portion **354** of the support layer **350** (see **Figure 7C**) remains and extends between two adjacent support posts. A movable layer **360** has also been deposited over the post structure, including a lower reflective layer **362**, a mechanical layer **364**, and a top layer **366**. Like the sacrificial layer **340**, the mechanical layer **364** may in some implementations be a multilayer structure, with three mechanical sublayers being sequentially deposited and patterned to form a mechanical layer **364** which has at least three different thicknesses across the mechanical layer **364**. The top layer **366** may in some implementations include the same or similar material and thickness as the lower reflective layer **362** such that residual stress or thermal expansion/contraction of the lower reflective layer **362** will be balanced by the same in the top layer **366**, preventing undesirable flexure of the movable layer **360**. While the movable layer **360** is not movable at the time of deposition, subsequent removal of the sacrificial layer discussed in greater detail below will permit the portions of the movable layer **360** extending between support structures **352** to be electrostatically deflected by the underlying electrode **334**.

[0081] In **Figure 7E**, the movable layer **360** is patterned to form strip electrodes and the sacrificial layer **340** (see **Figure 7D**) is removed to form a cavity **344** between portions of the movable layer **360** and the electrodes **334**. An array **300** of interferometric modulators is thus formed, in which spacer structures **320** are located between interferometric modulator elements **312** and **314**. The height of the spacer structures **320** is at least 0.5 um greater than the height of the surrounding interferometric modulator elements **312** and **314** due to the height of the spacer layer **322** within the spacer structure **320**. In addition, because the sacrificial layer **340** overlying spacer structure **320** was removed, no cavity is formed within the spacer structure **320** by the release etch, and the spacer structure is a continuous structure, providing additional stability.

[0082] **Figure 8** shows an example of a cross-section of another implementation of spacer structure within an array of interferometric modulators. The array **400** of **Figure 8** includes a spacer structure **420** disposed between EMS devices **412** and **414**. The EMS devices **412** and **414** include a conductive layer **434** supported by substrate **402** and spaced apart from an overlying movable layer **460** by a cavity **444**. The movable layer **460** is supported by support structures **452**.

[0083] The spacer structure **420** includes a spacer layer **422** overlying the substrate **402**. Overlying the spacer layer **422** are a layer **454** which includes the same material as the support posts **452**, and a layer **468** which includes the same material as the movable layer **460**. As can be seen in **Figure 8**, these layers **454** and **468** may be formed simultaneously with the support posts **452** and the movable layer **460** respectively, and may be formed by not removing the portions of the layers used to form the support posts **452** and the movable layer **460** which overlie the spacer layer **422**.

[0084] While the array **400** illustrated in **Figure 8** includes certain array elements, other implementations of an array such as array **400** may include additional array elements not described above with respect to **Figure 8**. For example, a dark mask such as an interferometric black mask may be disposed between the substrate and the support posts and/or spacer element **420**. Similarly, whether or not described above with respect to **Figure 8**, array elements may include properties different from or in addition to those described above. For example, conductive layer **434** may be formed from an appropriate thickness of an appropriate material to function as an optical absorber. Similarly, a lower layer of a multilayer movable layer **460** may be reflective.

[0085] **Figure 9** shows an example of a block diagram illustrating a method of fabricating an array of interferometric modulators including at least one spacer structure disposed within the array. The method **500** begins at a block **505** where a spacer layer is formed over a substrate. The method also may include the formation of a dark mask or other masking structure underneath the sacrificial layer.

[0086] The method **500** then moves to a block **510** where a sacrificial layer is formed over the spacer layer. In some implementations, additional layers, such as buffer layers and conductive layers are formed after forming the spacer layer in block **505** and before forming the sacrificial layer in block **510**.

[0087] The method **500** then moves to a block **515**, where the sacrificial layer is patterned to form a plurality of apertures, where at least one of the apertures extends over the spacer layer. Additional apertures may extend over additional spacer layers, or may be formed where support posts will eventually be formed. In addition, support posts may be formed at the edges of apertures extending over spacer layers.

[0088] The method **500** then moves to a block **520** where a support layer is formed over the patterned sacrificial layer. The support layer may be formed from any suitable material, and may make contact with a layer underlying the sacrificial layer at the base of the apertures formed in the sacrificial layer.

[0089] The method **500** finally moves to a block **525** where the support layer is patterned to form support structures, but a portion of the support layer overlying the spacer layer remains in place. By leaving the portion of the support layer overlying the spacer layer in place, the height of a spacer structure including the spacer layer will be increased. While the block **525** is illustrated as the final block in the method

500, other implementations of methods of fabrication may include additional steps performed before or after step **525**. For example, a movable layer may be formed after the support structures are formed, as discussed above, and a portion of the movably layer overlying the spacer layer may be left in place. Similarly, the sacrificial layer may be removed in a subsequent step via a release etch. Additional steps discussed elsewhere in the specification and not specifically discussed with respect to method **500** also may be incorporated into other implementations, along with at least some of the steps of method **500**.

[0090] As discussed above with respect to **Figure 6C**, the density of spacer structures which replace subpixels or other EMS elements may vary, and represents a balance between the effect on the performance of the array of EMS devices and the amount of protection afforded to the array by the inclusion of such spacer structures. In one particular implementation, one out of every 16 pixels includes a region in which a subpixel is replaced by a spacer structure. For 3x3 RGB pixels which otherwise include nine subpixels – three each of red, green and blue – the replacement of one of the subpixels with a spacer structure will mean that one out of every 48 subpixels of that color within 16- pixel region will be replaced with a masked structure.

[0091] The contribution of a given subpixel to the overall brightness of a pixel depends heavily on the color which that subpixel is configured to reflect. While a green subpixel contributes roughly 16% of the brightness to a pixel with nine subpixels, and a red subpixel contributes roughly 6% of the brightness, a blue subpixel may only contribute roughly 3%–6% of the brightness to a pixel. When one out of every 16 pixels includes one spacer structure replacing a blue subpixel, the net effect on the overall brightness of the display is roughly 0.1%. Thus, for an RGB array of interferometric modulators, replacement of blue subpixels will have less of an effect on the overall brightness of a display than replacement of other subpixels of other colors.

[0092] Nevertheless, in other implementations, subpixels which are red or green may be replaced by spacer structures, in addition to or instead of replacement of blue subpixels. Similarly, as discussed above, other implementations of interferometric modulators may include multi-state or analog interferometric modulators, and an appropriate selection of such a subpixel for replacement with a spacer structure may be made, taking into account the overall effect on the brightness and appearance of the resulting display.

[0093] Similarly, while implementations discussed above mention the replacement of one or two subpixels in each group of 16 pixels, other implementations may include replacement of larger or smaller amounts of subpixels. The overall height of the spacer structure also may be used to compensate for decreased spacer density. In some implementations, these spacer structures may be distributed throughout the array in a regular pattern, while in other implementations, a random or pseudo-random distribution of spacer structures may be used. In addition, the density of these spacer structures may in some implementations be greater near the center of the array where flexure of an overlying backplate is expected to be the greatest.

[0094] In other implementations, rather than replacing an optically active component of an array of interferometric modulators, spacer structures can be located within optically inactive areas of the array, such as the areas in which support structures are located. In particular, these spacer structures may overlie the support post, such that no additional active area is sacrificed due to its inclusion.

[0095] **Figure 10** shows an example of a cross-section of a portion of an array of interferometric modulators in which a spacer structure overlies a portion of a support structure. The array **600** includes a conductive layer **634** located over a substrate **602**, and a movable layer **660** spaced apart from the conductive layer **634** and supported by support structures **652** on the opposite side of a cavity **644**. The support structures **652** include a base portion **656** in contact with an underlying layer – in this case the substrate **602** – at anchor location **604**.

[0096] Overlying the support structure **652** is a spacer structure **672**, which has a base having a width less than the width of the base portion **656** of the support structure **652**, such that the base of the spacer structure does not extend beyond the edges of anchor location **604** of the layer underlying the support structure **652**. Because of this constraint on the cross-sectional dimensions of the spacer structure **672**, no portion of the base of spacer structure **672** overlies a portion of cavity **644**, and a load on the spacers from contact with a backplate can be borne by a contiguous layer stack underlying the spacer structure **672**. In contrast, if spacer structure **672** were to extend over a portion of the cavity **644**, the mechanical layer **660** or outwardly extending wings of support structure **652** could be forced downward, increasing the chances of mechanical failure of the spacer structure **672** and damage to sensitive portions of the array **600**. In some implementations, the spacer structure **672** may have a width which is greater at point on the spacer structure **672** some distance above the base without necessarily forcing a cantilevered portion of support structure **652** downward in response to application of a force on the spacer structure **672**.

[0097] In some implementations, the spacer structure **672** can be formed from a layer of organic material, and in particular from a layer of cross-linked organic material. The use of cross-linked organic material has been shown to provide more durable spacer structures which are less likely to fail under load than spacer structures formed from other materials. Suitable organic material can be identified based at least in part on some or all of the following properties: elastic modulus, recovery rate after deformation, resistance to chemical attack (such as a xenon difluoride etch which can be used to remove a sacrificial layer), outgassing properties and sidewall profile after patterning. Some examples of suitable organic materials are: the HDM-41xx series of materials sold by HD MicroSystems™ and JSR NN856 sold by JSR Micro, although a wide variety of other organic materials also may be used to form the spacer structure **672**.

[0098] **Figures 11A–11D** show an example of a fabrication process which can be used to form an overlying spacer structure within an array of interferometric modulators. In **Figure 11A**, a dark mask **710** is formed over a substrate **702** via a process similar to that described with respect to dark mask **310** of **Figure 7A**. A buffer layer **732** is also formed over the dark mask **710**. Because the spacer structure formed by this process will not be positioned between support structures, as with the spacer structure **320** of **Figure 7E**, the dark mask **710** does not need to extend into portions of the array that would otherwise be optically active, and may underlie only the support structures and other optically inactive components such as bussing layers.

[0099] In **Figure 11B**, a conductive layer **734** is formed over the buffer layer **732**, and a dielectric layer **736** is formed over the conductive layer **734** and buffer layer **732**. A sacrificial layer **740** is deposited and patterned to form apertures **742**, which correspond to the eventual location of support structures. The apertures **742** expose a portion of an underlying layer – the dielectric layer **736** in the illustrated implementation – and this exposed portion of the underlying layer will serve as an anchor location **704** for the eventual support structure.

[0100] In **Figure 11C**, a layer of support material has been deposited and patterned to form support structures **752**, and a movable layer **760** has been formed over the support structures **752**. In the illustrated implementation, the movable layer **760** includes a lower reflective layer **762**, a mechanical layer **764**, and a top layer **766**, similar to the movable layer **360** of **Figure 7D**. A layer **770** of spacer material is formed over the patterned movable layer **760**. Because a portion of the movable layer **760** may be removed such that a single support structure **752** supports two (or more) electrically and physically isolated portions of movable layer **760**, the movable layer **760** in the illustrated implementation is patterned prior to deposition of the spacer layer **770**.

[0101] Finally, in **Figure 11D**, the layer **770** (see **Figure 11C**) of spacer material is patterned to form spacer structures **772** overlying the support structures **752**, and having a base which does not extend outside of the anchor location **704** underlying the base **756** of the support structure **752**. The sacrificial layer **740** (see **Figure 11C**) is also removed to form cavities **744** between the movable layer **760** and the conductive layer **734** in the finished array **700.**

[0102] **Figure 12** shows an example of a block diagram illustrating a method of fabricating an array of interferometric modulators including at least one spacer overlying a support structure. The method **800** begins at a block **805** where a patterned sacrificial layer is formed over a substrate, by forming a sacrificial layer over the substrate and patterning the sacrificial layer to form apertures therein. Additional layers, such as conductive layers and dark or black masks may be formed over the substrate prior to forming the patterned sacrificial layer.

[0103] The method **800** moves to a block **810**, where a support layer is formed over the patterned sacrificial layer. The support layer may be formed from any suitable material and may contact with an underlying layer at anchor locations.

[0104] The method **800** moves to a block **815**, where the support layer is patterned to form support structures. As discussed above, these support structures may have a base which is in contact with an underlying layer at an anchor location. The support structures may, for example, also include an outwardly extending wing portion which extends over a portion of the sacrificial layer.

[0105] The method **800** moves to a block **820**, where a spacer layer is formed over the support structures. As discussed above, additional layers or structures may be formed after forming the support structures and prior to forming a spacer layer over the support structures. For example, a movable layer, which may include a mechanical layer and one or more additional reflective or metal layers, may be formed and patterned after forming the support posts, such that the movable layer will be supported by the support posts. As discussed above, the spacer layer may be an organic material, and may in particular be a cross-linked organic material.

[0106] Finally, the method **800** moves to a block **825** where the spacer layer is patterned to form spacer structures. The spacer structures have a base having a dimension which is within the anchor location at the base of the support structures, such that the base of the spacer will not overlie a portion of the sacrificial layer. Even when the sacrificial layer is subsequently removed, the base of the spacer structure will overlie only solid layers, and will not overlie a portion of a cavity formed by removal of the sacrificial layer.

[0107] In some implementations, overlying spacer structures may be used in conjunction with spacer structures which replace subpixels or other EMS device elements. For example, an overlying spacer structure may be disposed over any portion of an interferometric modulator array sufficiently rigid to provide support for the same. In particular, an overlying spacer structure may be disposed over a spacer structure which replaces a subpixel, so as to further increase the height of the overall spacer structure.

[0108] **Figure 13** shows an example of an interferometric modulator array which includes both a spacer structure which replaces a subpixel of the array and an additional spacer structure overlying the subpixel-replacing spacer structure. In particular, the array **900** includes a spacer structure **920** formed from an underlying spacer layer **922** and a stack of other materials used in the fabrication of the interferometric modulator array. Overlying the spacer **920** is an additional spacer structure **972**, which may be formed from any suitable material. In some implementations, the spacer structure **972** may include an organic material, such as those described above with respect to **Figure 10.** Because the underlying spacer structure **920** supporting the spacer structure **972** is a solid stack of layers, additional support may be provided to the spacer structure **972**, increasing the load which the spacer structure **972** can bear before failing and providing additional protection to the array. In the illustrated implementation, the spacer structure **972** does not extend outside the edges of the underlying spacer layer **922**, but in other implementations the spacer structure can be narrower or wider than depicted in **Figure 13**. In some implementations, the spacer structure **972** can be built on the other layers within spacer structure **920**, such as movable layer **960** and layer **950** of support material, without forming an underlying spacer layer **922.** In some implementations, the spacer structure **972** can be built much taller than the spacer structure **772** (see **Figure 11D**), because the underlying structure **920** in the space between support structure locations provides a much wider base for building the spacer structure **972** than the support structures **752.**

[0109] Fabrication of such an array may proceed as described with respect to **Figures 7A–7D**. However, after patterning the movable layer **960**, a layer of spacer material may be deposited and patterned to form spacer structures **972** in a desired shape. This deposition and patterning to form spacer structures **972** may in some implementations be similar to the process described with respect to **Figures 11C–11D**, although other suitable deposition and patterning processes may also be used.

[0110] While the above figures schematically illustrate certain implementations of interferometric modulator devices or methods for fabricating arrays of interferometric modulators, the above teachings can be applied to other EMS devices, whether optical or non-optical. Similarly, other implementations may include additional or fewer components or steps than those discussed above. Both the illustrated steps and additional steps not specifically illustrated or discussed herein may be used to form additional structures not specifically depicted herein. For example, certain of the layers discussed herein may additionally be patterned to form vias between conductive layers which allow for electrical routing throughout the array of interferometric modulators. Additional bussing structures may similarly be formed within and about the array.

[0111] **Figures 14A** and **14B** are system block diagrams illustrating a display device **40** that includes a plurality of IMOD display elements. The display device **40**

can be, for example, a smart phone, a cellular or mobile telephone. However, the same components of the display device **40** or slight variations thereof are also illustrative of various types of display devices such as televisions, computers, tablets, e-readers, hand-held devices and portable media devices.

[0112] The display device **40** includes a housing **41**, a display **30**, an antenna **43**, a speaker **45**, an input device **48** and a microphone **46**. The housing **41** can be formed from any of a variety of manufacturing processes, including injection molding, and vacuum forming. In addition, the housing **41** may be made from any of a variety of materials, including, but not limited to: plastic, metal, glass, rubber and ceramic, or a combination thereof. The housing **41** can include removable portions (not shown) that may be interchanged with other removable portions of different color, or containing different logos, pictures, or symbols.

[0113] The display **30** may be any of a variety of displays, including a bi-stable or analog display, as described herein. The display **30** also can be configured to include a flat-panel display, such as plasma, EL, OLED, STN LCD, or TFT LCD, or a non-flat-panel display, such as a CRT or other tube device. In addition, the display **30** can include an IMOD-based display, as described herein.

[0114] The components of the display device **40** are schematically illustrated in **Figure 14A**. The display device **40** includes a housing **41** and can include additional components at least partially enclosed therein. For example, the display device **40** includes a network interface **27** that includes an antenna **43** which can be coupled to a transceiver **47**. The network interface **27** may be a source for image data that could be displayed on the display device **40**. Accordingly, the network interface **27** is one example of an image source module, but the processor **21** and the input device **48** also may serve as an image source module. The transceiver **47** is connected to a processor **21**, which is connected to conditioning hardware **52**. The conditioning hardware **52** may be configured to condition a signal (such as filter or otherwise manipulate a signal). The conditioning hardware **52** can be connected to a speaker **45** and a microphone **46**. The processor **21** also can be connected to an input device **48** and a driver controller **29**. The driver controller **29** can be coupled to a frame buffer **28**, and to an array driver **22**, which in turn can be coupled to a display array **30**. One or more elements in the display device **40**, including elements not specifically depicted in

Figure 14A, can be configured to function as a memory device and be configured to communicate with the processor **21**. In some implementations, a power supply **50** can provide power to substantially all components in the particular display device **40** design.

[0115] The network interface **27** includes the antenna **43** and the transceiver **47** so that the display device **40** can communicate with one or more devices over a network. The network interface **27** also may have some processing capabilities to relieve, for example, data processing requirements of the processor **21**. The antenna **43** can transmit and receive signals. In some implementations, the antenna **43** transmits and receives RF signals according to the IEEE 16.11 standard, including IEEE 16.11(a), (b), or (g), or the IEEE 802.11 standard, including IEEE 802.11a, b, g, n, and further implementations thereof. In some other implementations, the antenna **43** transmits and receives RF signals according to the Bluetooth® standard. In the case of a cellular telephone, the antenna **43** can be designed to receive code division multiple access (CDMA), frequency division multiple access (FDMA), time division multiple access (TDMA), Global System for Mobile communications (GSM), GSM/General Packet Radio Service (GPRS), Enhanced Data GSM Environment (EDGE), Terrestrial Trunked Radio (TETRA), Wideband-CDMA (W-CDMA), Evolution Data Optimized (EV-DO), 1xEV-DO, EV-DO Rev A, EV-DO Rev B, High Speed Packet Access (HSPA), High Speed Downlink Packet Access (HSDPA), High Speed Uplink Packet Access (HSUPA), Evolved High Speed Packet Access (HSPA+), Long Term Evolution (LTE), AMPS, or other known signals that are used to communicate within a wireless network, such as a system utilizing 3G, 4G or 5G technology. The transceiver **47** can pre-process the signals received from the antenna **43** so that they may be received by and further manipulated by the processor **21**. The transceiver **47** also can process signals received from the processor **21** so that they may be transmitted from the display device **40** via the antenna **43**.

[0116] In some implementations, the transceiver **47** can be replaced by a receiver. In addition, in some implementations, the network interface **27** can be replaced by an image source, which can store or generate image data to be sent to the processor **21**. The processor **21** can control the overall operation of the display device **40**. The processor **21** receives data, such as compressed image data from the network interface

27 or an image source, and processes the data into raw image data or into a format that can be readily processed into raw image data. The processor **21** can send the processed data to the driver controller **29** or to the frame buffer **28** for storage. Raw data typically refers to the information that identifies the image characteristics at each location within an image. For example, such image characteristics can include color, saturation and gray-scale level.

[0117] The processor **21** can include a microcontroller, CPU, or logic unit to control operation of the display device **40**. The conditioning hardware **52** may include amplifiers and filters for transmitting signals to the speaker **45**, and for receiving signals from the microphone **46**. The conditioning hardware **52** may be discrete components within the display device **40**, or may be incorporated within the processor **21** or other components.

[0118] The driver controller **29** can take the raw image data generated by the processor **21** either directly from the processor **21** or from the frame buffer **28** and can re-format the raw image data appropriately for high speed transmission to the array driver **22**. In some implementations, the driver controller **29** can re-format the raw image data into a data flow having a raster-like format, such that it has a time order suitable for scanning across the display array **30**. Then the driver controller **29** sends the formatted information to the array driver **22**. Although a driver controller **29**, such as an LCD controller, is often associated with the system processor **21** as a stand-alone Integrated Circuit (IC), such controllers may be implemented in many ways. For example, controllers may be embedded in the processor **21** as hardware, embedded in the processor **21** as software, or fully integrated in hardware with the array driver **22**.

[0119] The array driver **22** can receive the formatted information from the driver controller **29** and can re-format the video data into a parallel set of waveforms that are applied many times per second to the hundreds, and sometimes thousands (or more), of leads coming from the display's x-y matrix of display elements.

[0120] In some implementations, the driver controller **29**, the array driver **22**, and the display array **30** are appropriate for any of the types of displays described herein. For example, the driver controller **29** can be a conventional display controller or a bi-stable display controller (such as an IMOD display element controller). Additionally, the array driver **22** can be a conventional driver or a bi-stable display driver (such as an IMOD display element driver). Moreover, the display array **30** can be a conventional display array or a bi-stable display array (such as a display including an array of IMOD display elements). In some implementations, the driver controller **29** can be integrated with the array driver **22**. Such an implementation can be useful in highly integrated systems, for example, mobile phones, portable-electronic devices, watches or small-area displays.

[0121] In some implementations, the input device **48** can be configured to allow, for example, a user to control the operation of the display device **40**. The input device **48** can include a keypad, such as a QWERTY keyboard or a telephone keypad, a button, a switch, a rocker, a touch-sensitive screen, a touch-sensitive screen integrated with the display array **30**, or a pressure- or heat-sensitive membrane. The microphone **46** can be configured as an input device for the display device **40**. In some implementations, voice commands through the microphone **46** can be used for controlling operations of the display device **40**.

[0122] The power supply **50** can include a variety of energy storage devices. For example, the power supply **50** can be a rechargeable battery, such as a nickel-cadmium battery or a lithium-ion battery. In implementations using a rechargeable battery, the rechargeable battery may be chargeable using power coming from, for example, a wall socket or a photovoltaic device or array. Alternatively, the rechargeable battery can be wirelessly chargeable. The power supply **50** also can be a renewable energy source, a capacitor, or a solar cell, including a plastic solar cell or solar-cell paint. The power supply **50** also can be configured to receive power from a wall outlet.

[0123] In some implementations, control programmability resides in the driver controller **29** which can be located in several places in the electronic display system. In some other implementations, control programmability resides in the array driver **22**. The above-described optimization may be implemented in any number of hardware and/or software components and in various configurations.

[0124] As used herein, a phrase referring to “at least one of” a list of items refers to any combination of those items, including single members. As an example, “at least one of: a, b, or c” is intended to cover: a, b, c, a-b, a-c, b-c, and a-b-c.

[0125] The various illustrative logics, logical blocks, modules, circuits and algorithm steps described in connection with the implementations disclosed herein may be implemented as electronic hardware, computer software, or combinations of both. The interchangeability of hardware and software has been described generally, in terms of functionality, and illustrated in the various illustrative components, blocks, modules, circuits and steps described above. Whether such functionality is implemented in hardware or software depends upon the particular application and design constraints imposed on the overall system.

[0126] The hardware and data processing apparatus used to implement the various illustrative logics, logical blocks, modules and circuits described in connection with the aspects disclosed herein may be implemented or performed with a general purpose single- or multi-chip processor, a digital signal processor (DSP), an application specific integrated circuit (ASIC), a field programmable gate array (FPGA) or other programmable logic device, discrete gate or transistor logic, discrete hardware components, or any combination thereof designed to perform the functions described herein. A general purpose processor may be a microprocessor, or, any conventional processor, controller, microcontroller, or state machine. A processor also may be implemented as a combination of computing devices, such as a combination of a DSP and a microprocessor, a plurality of microprocessors, one or more microprocessors in conjunction with a DSP core, or any other such configuration. In some implementations, particular steps and methods may be performed by circuitry that is specific to a given function.

[0127] In one or more aspects, the functions described may be implemented in hardware, digital electronic circuitry, computer software, firmware, including the structures disclosed in this specification and their structural equivalents thereof, or in any combination thereof. Implementations of the subject matter described in this specification also can be implemented as one or more computer programs, i.e., one or more modules of computer program instructions, encoded on a computer storage media for execution by, or to control the operation of, data processing apparatus.

[0128] Various modifications to the implementations described in this disclosure may be readily apparent to those skilled in the art, and the generic principles defined herein may be applied to other implementations without departing from the spirit or scope of this disclosure. Thus, the claims are not intended to be limited to the implementations shown herein, but are to be accorded the widest scope consistent with this disclosure, the principles and the novel features disclosed herein. Additionally, a person having ordinary skill in the art will readily appreciate, the terms “upper” and “lower” are sometimes used for ease of describing the figures, and indicate relative positions corresponding to the orientation of the figure on a properly oriented page, and may not reflect the proper orientation of, e.g., an IMOD display element as implemented.

[0129] Certain features that are described in this specification in the context of separate implementations also can be implemented in combination in a single implementation. Conversely, various features that are described in the context of a single implementation also can be implemented in multiple implementations separately or in any suitable subcombination. Moreover, although features may be described above as acting in certain combinations and even initially claimed as such, one or more features from a claimed combination can in some cases be excised from the combination, and the claimed combination may be directed to a subcombination or variation of a subcombination.

[0130] Similarly, while operations are depicted in the drawings in a particular order, a person having ordinary skill in the art will readily recognize that such operations need not be performed in the particular order shown or in sequential order, or that all illustrated operations be performed, to achieve desirable results. Further, the drawings may schematically depict one more example processes in the form of a flow diagram. However, other operations that are not depicted can be incorporated in the example processes that are schematically illustrated. For example, one or more additional operations can be performed before, after, simultaneously, or between any of the illustrated operations. In certain circumstances, multitasking and parallel processing may be advantageous. Moreover, the separation of various system components in the implementations described above should not be understood as requiring such separation in all implementations, and it should be understood that the described program components and systems can generally be integrated together in a single software product or packaged into multiple software products. Additionally, other implementations are within the scope of the following claims. In some cases, the actions recited in the claims can be performed in a different order and still achieve desirable results.

CLAIMS

What is claimed is:

1. A device, comprising:

a substrate;

an array of electromechanical elements supported by the substrate, the electromechanical elements including:

a conductive layer supported by the substrate;

a movable layer overlying at least a portion of the conductive layer; and

a plurality of support structures underlying at least a portion of the movable layer and spacing the movable layer apart from the conductive layer by a cavity, wherein the plurality of support structures are fixed relative to an underlying layer at anchor locations; and

means for raising the height of overlying layers, wherein the raising means underlies a first layer including the same material as the plurality of support structures and a second layer including the same material as the movable layer, wherein the upper surface of the second layer overlying the raising means is located at a greater height from the surface of the substrate than the remainder of the device.

2. The device of claim 1, wherein the raising means provide means for rigidly supporting at least a portion of the overlying layers.

3. The device of claim 1 or 2, wherein the raising means include a spacer layer disposed in an area between anchor locations.

4. The device of claim 3, wherein the first layer extends between at least a first anchor location and a second anchor location.

5. The device of claim 4, wherein the first layer extends between four adjacent anchor locations.

6. The device of claim 3, wherein the array of electromechanical elements include an array of interferometric modulators (IMODs).

7. The device of claim 6, wherein the array of IMODs are arranged as an array of pixels, wherein the array includes:

a first portion of the array defining a first pixel, the first pixel including a plurality of IMODs configured to reflect light of a first color, and a plurality of IMODs configured to reflect light of a second color; and

a second portion of the array defining a second pixel, wherein the second portion of the array is substantially similar in size to the first portion of the array, the second pixel including at least one less IMOD configured to reflect light of the first color than the first pixel, wherein the second pixel further includes a spacer structure disposed within the second portion of the array, wherein the spacer layer includes the spacer layer and at least one overlying layer, and wherein the spacer extends to a height higher than the remainder of the second pixel.

8. The device of claim 7, wherein the first color of light is blue.

9. The device of claim 8, wherein the second color of light is red, wherein the first pixel further includes a plurality of IMODs configured to reflect green light.

10. The device of claim 6, wherein the array of IMODs are generally arranged in a regularly-spaced pattern, and wherein at least one location in the regularly-spaced pattern includes a spacer structure instead of an IMOD, wherein the spacer structure includes the spacer layer and at least one overlying layer, and wherein the spacer extends to a height higher than the remainder of the array of IMODs.

11. The device of claim 6, wherein the array of IMODs includes:

a first portion of the array containing a first number of IMODs; and

a second portion of the array containing a second number of IMODs and a first number of spacer structures, wherein the second portion of the array is substantially identical in size and shape to the first portion of the array, and wherein a sum of the second number of IMODs and the first number of spacer structures in the second portion of the array is equal to the first number of IMODs in the first portion of the array.

12. The device of any of claims 3 to 11, additionally including an additional spacer structure overlying a portion of the device, wherein the additional spacer structure includes an organic material.

13. The device of claim 12, wherein the additional spacer structure overlies a support structure, and wherein the additional spacer structure does not extend outward beyond the edges of the anchor location underlying the support structure.

14. The device of claim 12, wherein the additional spacer structure overlies the spacer layer.

15. The device of claim 14, wherein the additional spacer structure does not extend outward beyond the edges of the spacer layer.

16. The device of any of claims 11 to 15, wherein the additional spacer structure includes a cross-linked organic material.

17. The device of any of claims 3 to 16, wherein the conductive layer serves as an optical absorber layer.

18. The device of any of claims 3 to 17, wherein at least a portion of the movable layer adjacent the cavity comprises a reflective material.

19. The device of any of claims 3 to 18, additionally including a masking structure extending underneath at least the anchor locations and the spacer layer.

20. The device of claim 19, wherein the masking structure includes an interferometric black mask.

21. The device of any of claims 3 to 20, wherein the spacer includes an oxide.

22. The device of any of claims 3 to 21, wherein the upper surface of the second layer overlying the spacer layer is at least about 0.5 um higher than the surrounding portions of the array.

23. The device of any of claims 3 to 22, additionally including:

a processor that is configured to communicate with at least one of the conductive layer and mechanical layer, the processor being configured to process image data; and

a memory device that is configured to communicate with the processor.

24. The device of claim 23, additionally including:

a driver circuit configured to send at least one signal to at least one of the conductive layer and mechanical layer; and

a controller configured to send at least a portion of the image data to the driver circuit.

25. The device of claim 23 or 24, additionally including an image source module configured to send the image data to the processor, wherein the image source module includes at least one of a receiver, transceiver, and transmitter.

26. The device of any of claims 23 to 25, additionally including an input device configured to receive input data and to communicate the input data to the processor.

27. A method of fabricating a device, comprising:

forming at least one spacer over a substrate;

forming a sacrificial layer over the spacer;

patterning the sacrificial layer to include a plurality of apertures, wherein at least one of the plurality of apertures extends over the spacer;

forming a support layer over the patterned sacrificial layer; and

patterning the support layer to form support structures, wherein a portion of the support layer overlying the spacer remains in place to form a spacer structure.

28. The method of claim 27, additionally including:

forming a movable layer after patterning the support layer to form support structures; and

patterning the movable layer, wherein a portion of the movable layer overlying the spacer remains in place.

29. The method of claim 27 or 28, additionally including forming a conductive layer over the substrate prior to forming the sacrificial layer.

30. The method of claim 29, additionally forming a buffer layer over at least the conductive layer and the spacer.

31. The method of claim 29, additionally forming an interferometric black mask over the substrate, wherein the interferometric black mask is formed below a spacer.

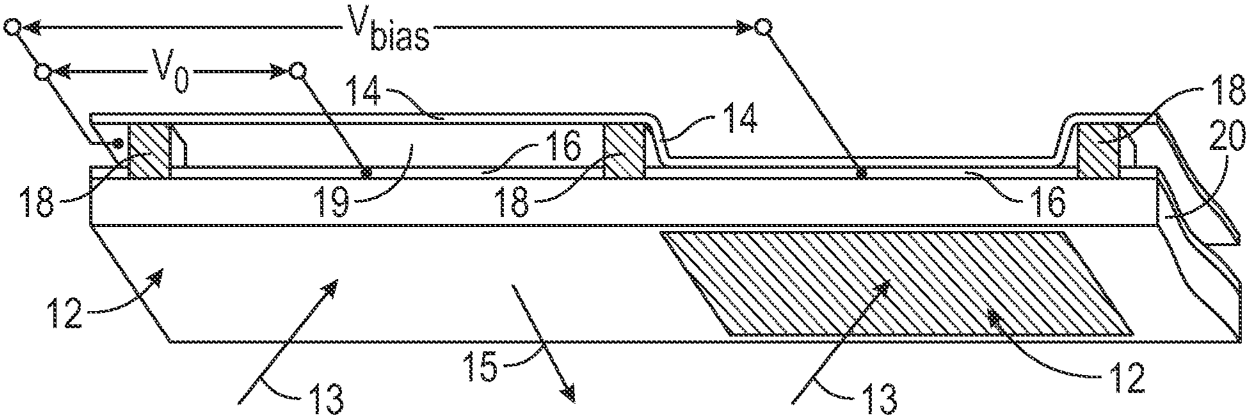
V_{bias}
V_0
14
14
18
20
16
16
18
19
18
12
13
15
13
12

FIG. 1

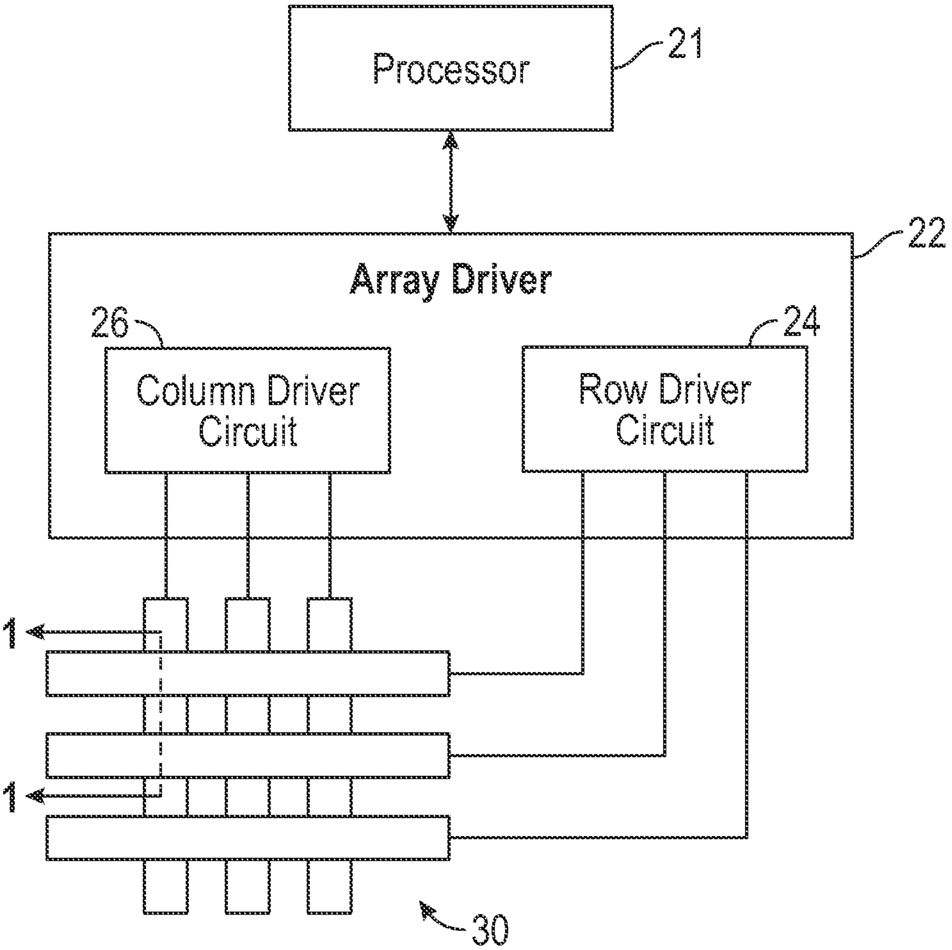
Processor
21
Array Driver
22
26
Column Driver Circuit
24
Row Driver Circuit
1
1
30

FIG. 2

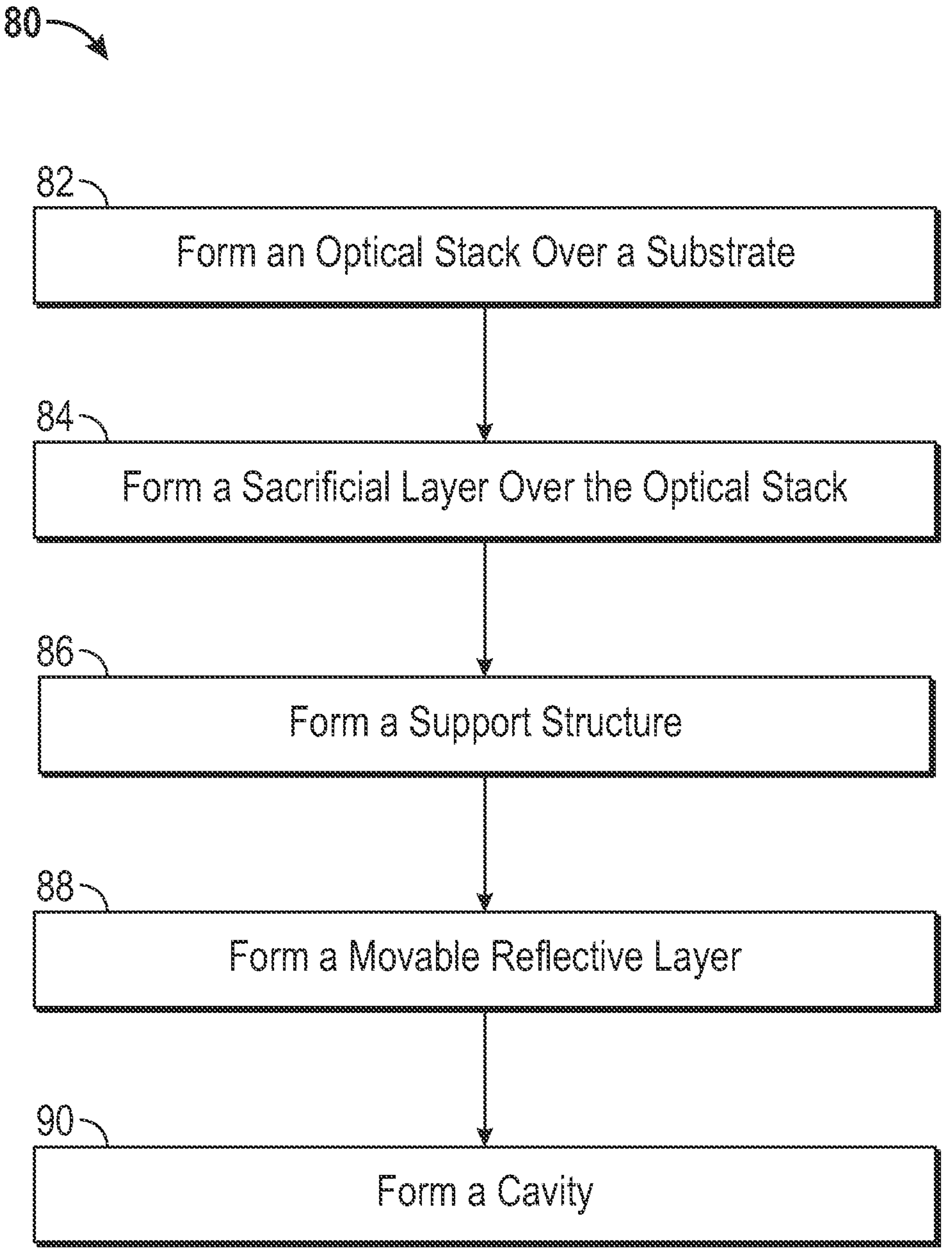
80
82
Form an Optical Stack Over a Substrate
84
Form a Sacrificial Layer Over the Optical Stack
86
Form a Support Structure
88
Form a Movable Reflective Layer
90
Form a Cavity

FIG. 3

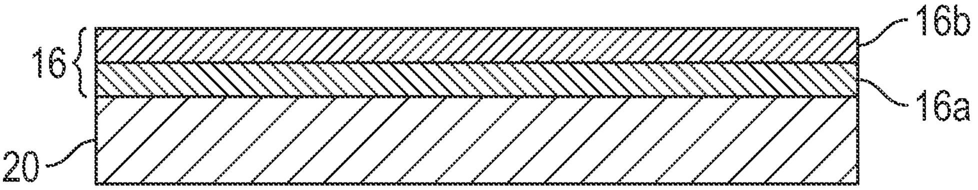

FIG. 4A

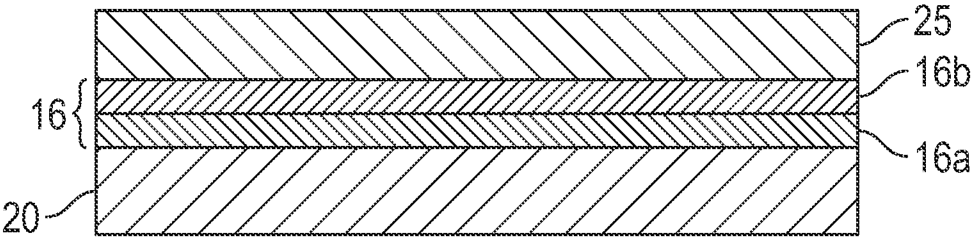

FIG. 4B

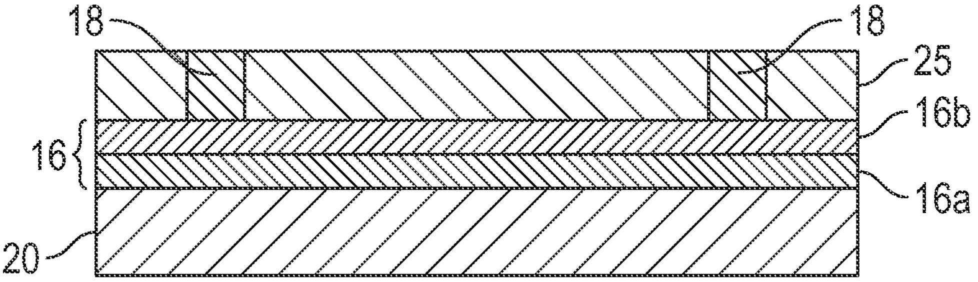

FIG. 4C

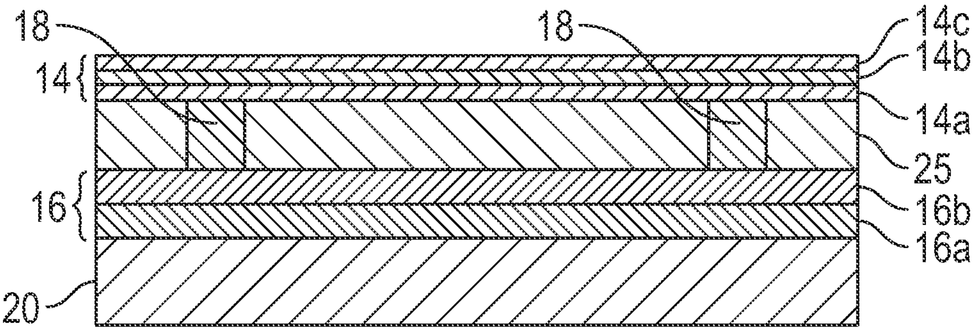

FIG. 4D

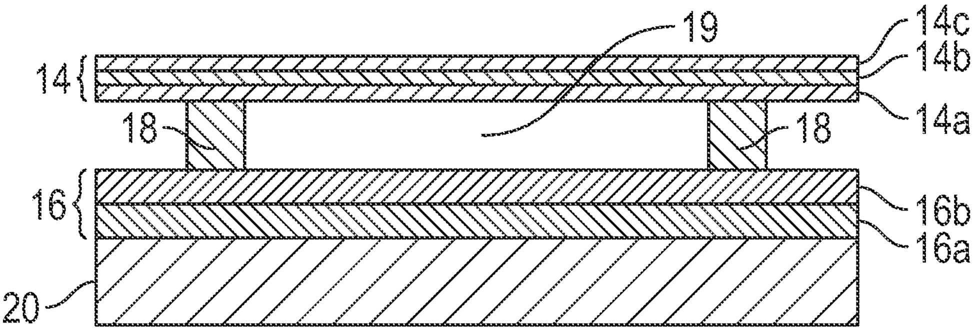

FIG. 4E

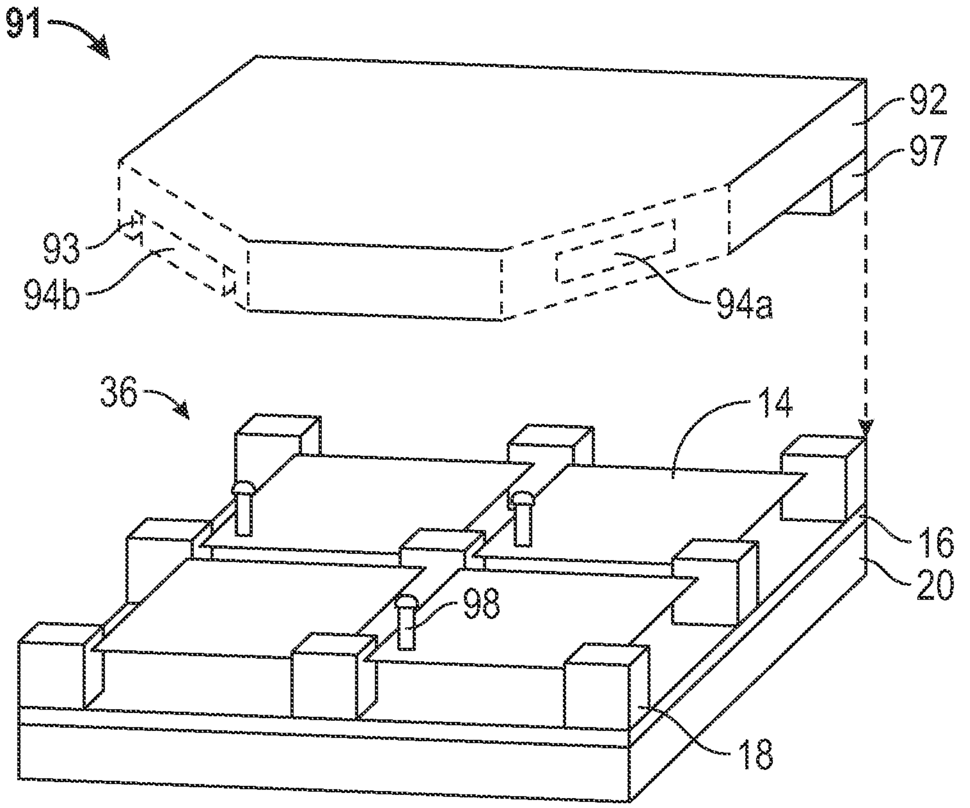
91
92
97
93
94b
94a
36
14
16
20
98
18

FIG. 5A

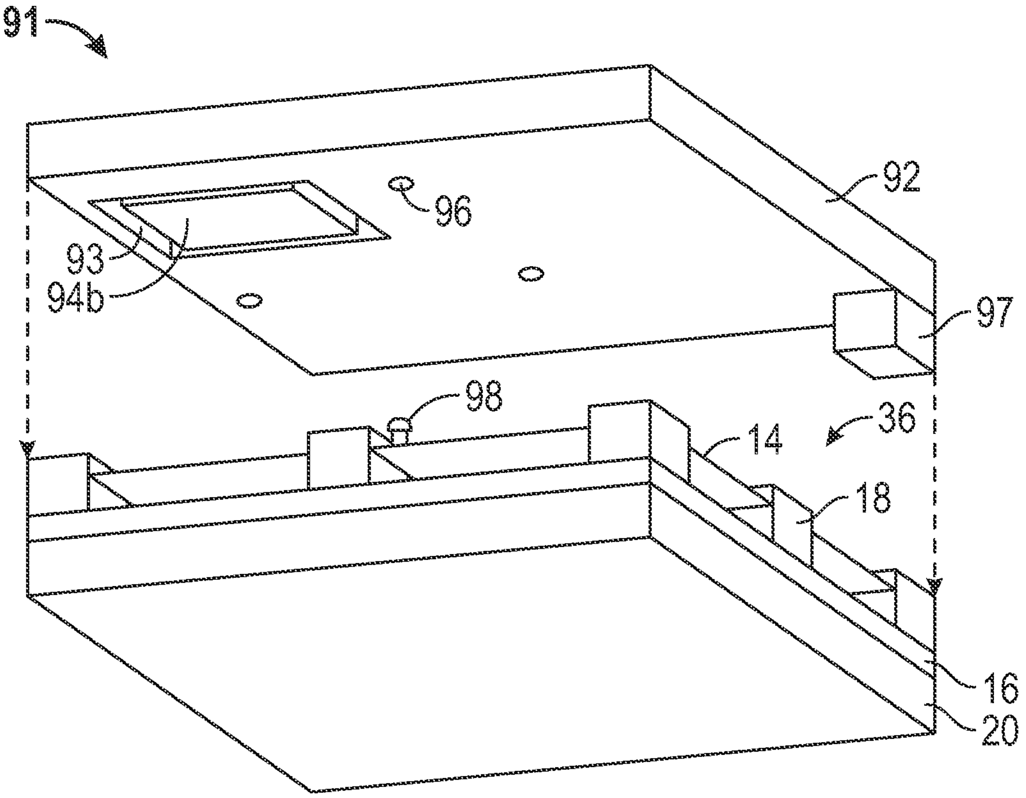
91
92
96
93
94b
97
98
14
36
18
16
20

FIG. 5B

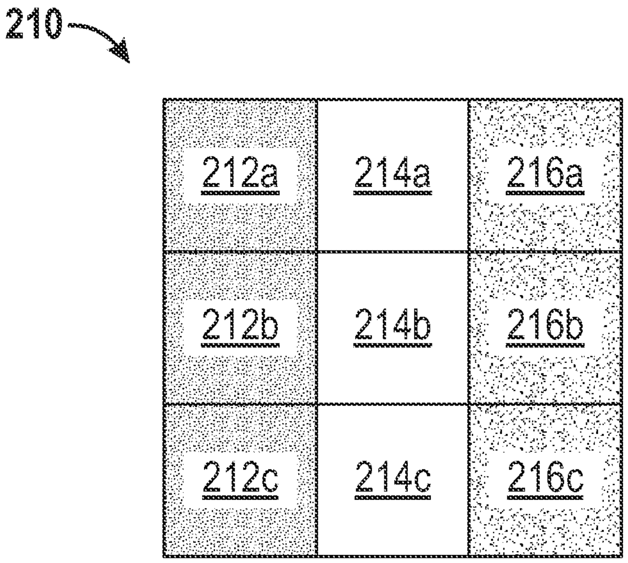
210
212a
214a
216a
212b
214b
216b
212c
214c
216c

FIG. 6A

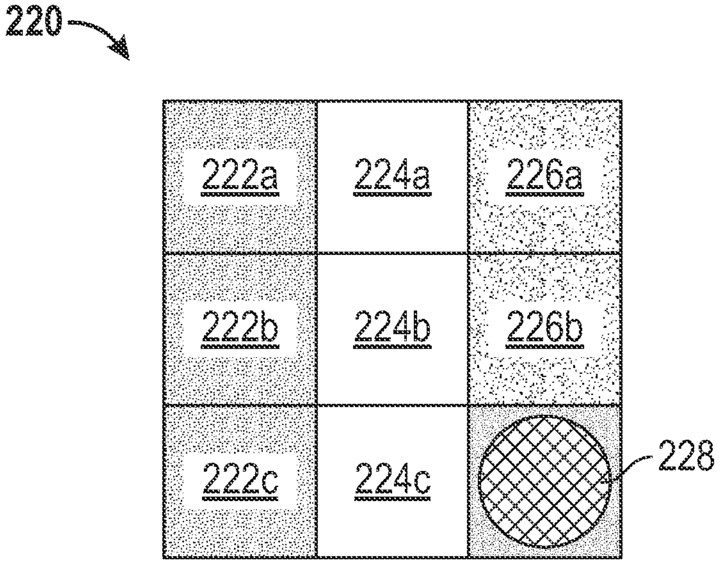
220
222a
224a
226a
222b
224b
226b
222c
224c
228

FIG. 6B

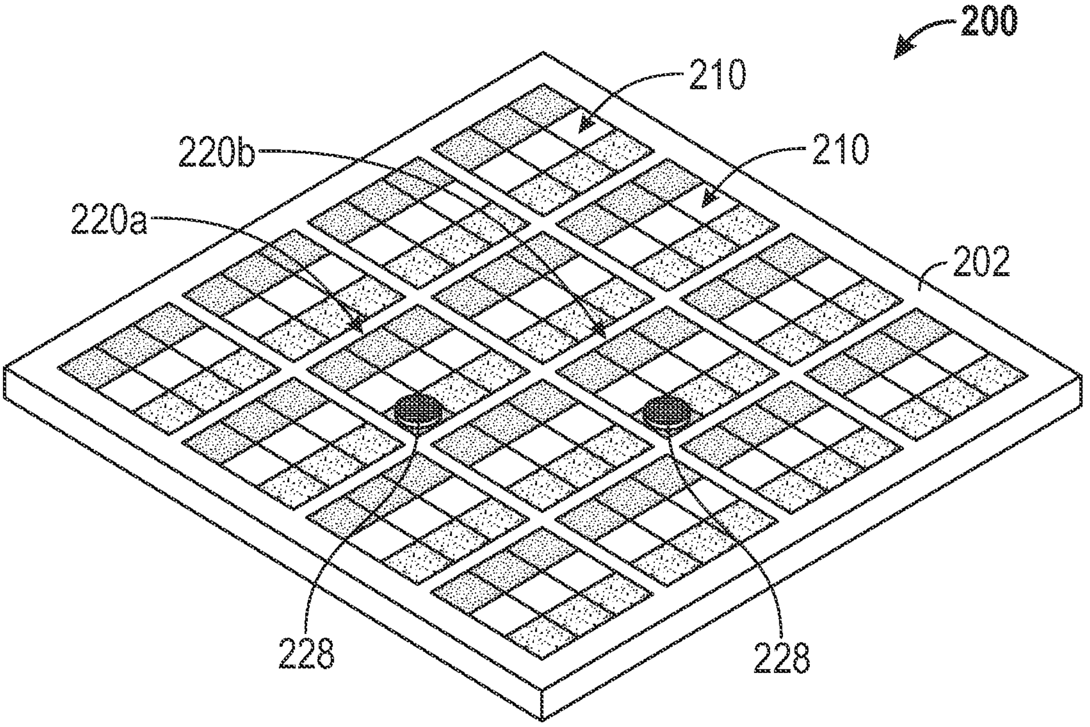

FIG. 6C

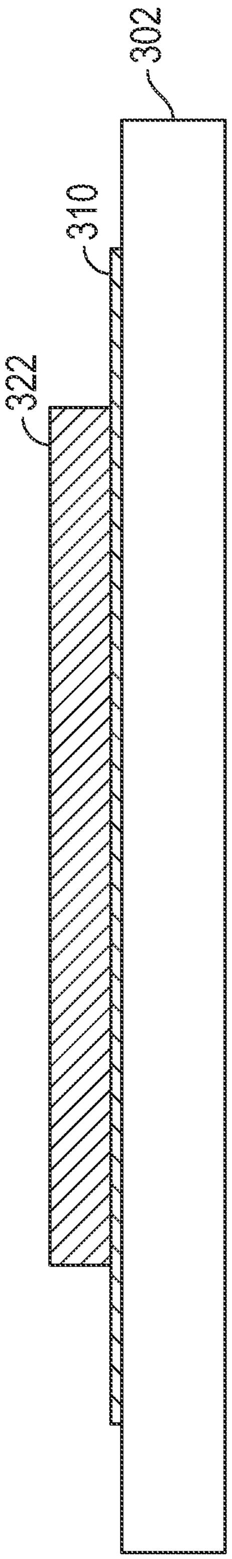

FIG. 7A

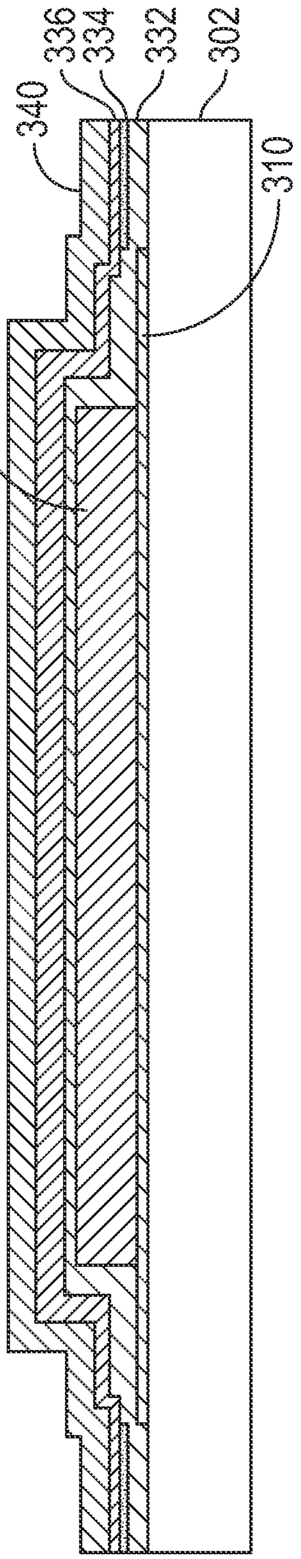

FIG. 7B

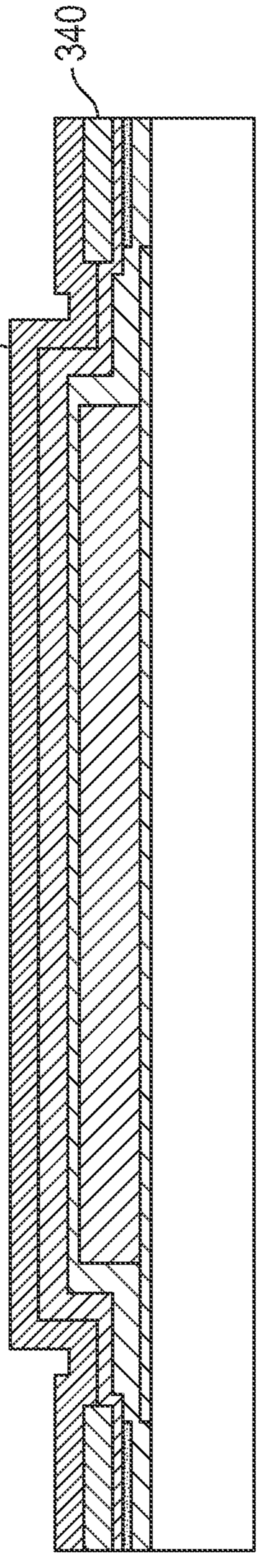

FIG. 7C

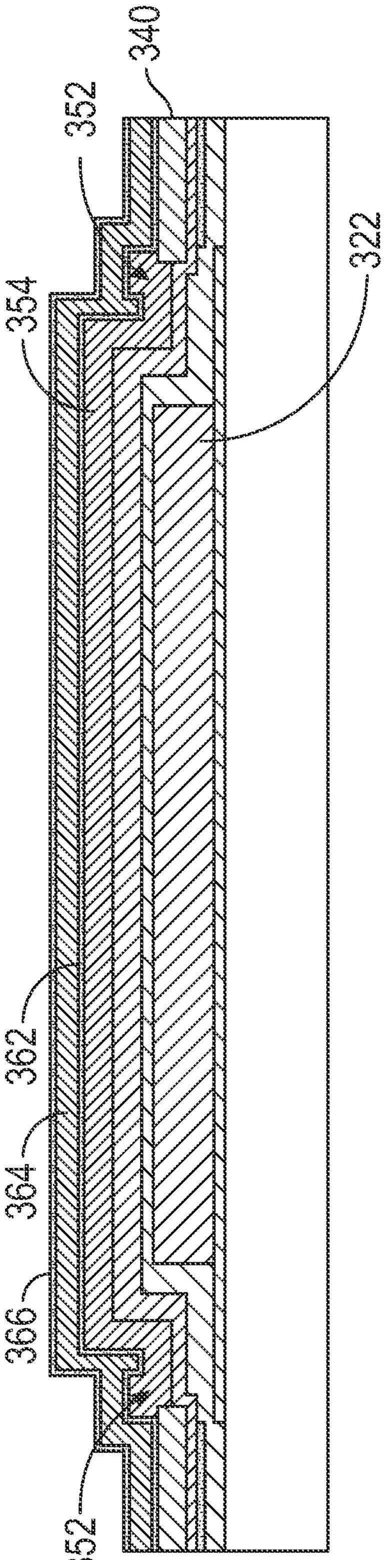

FIG. 7D

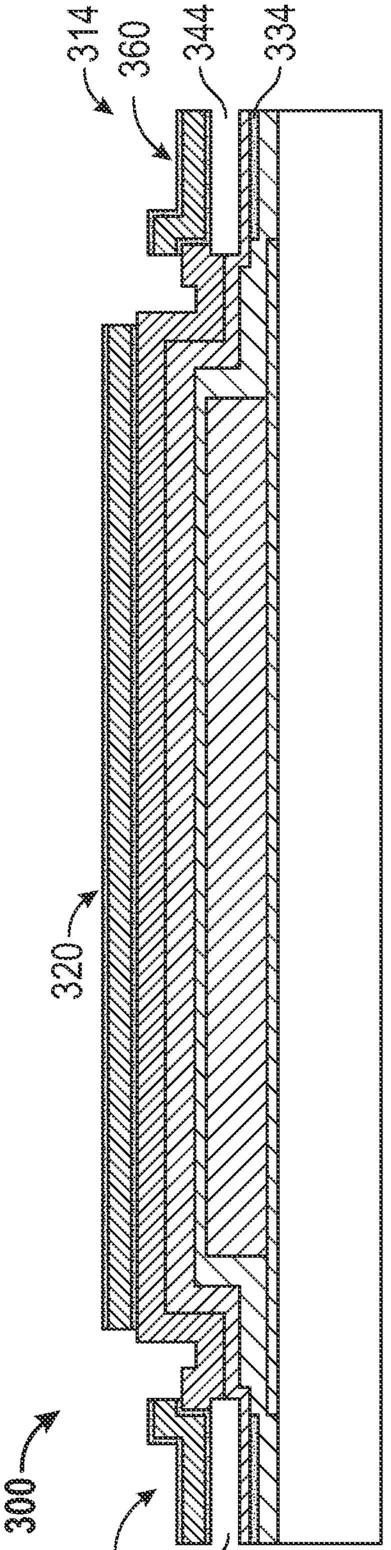
300
312
344
320
314
360
344
334

FIG. 7E

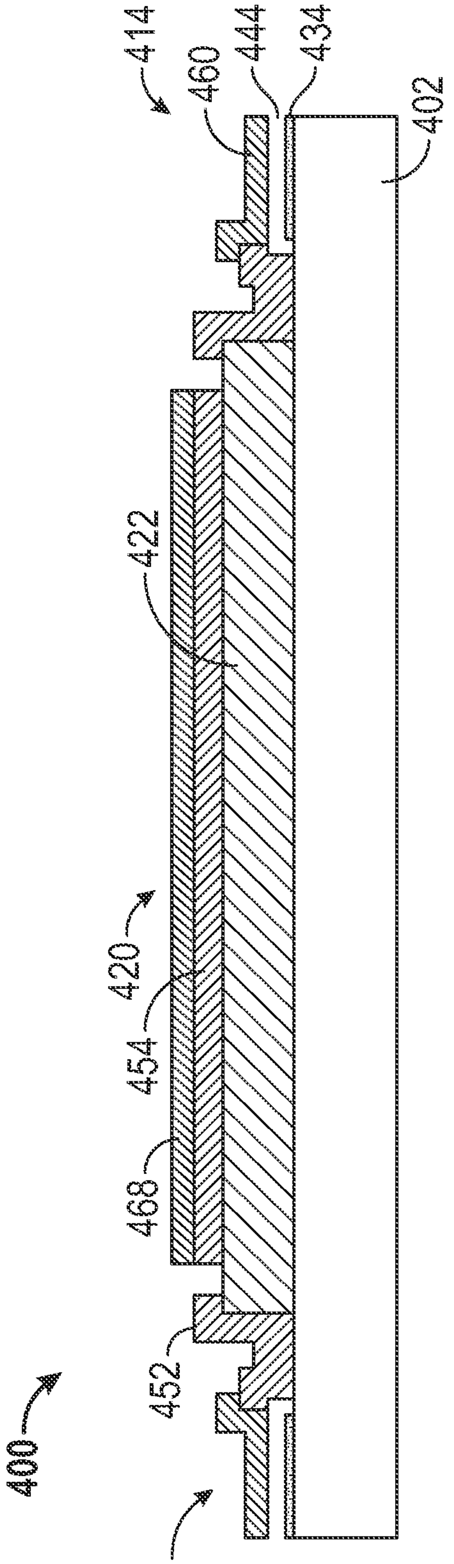
400
412
452
468
454
420
422
414
460
444
434
402

FIG. 8

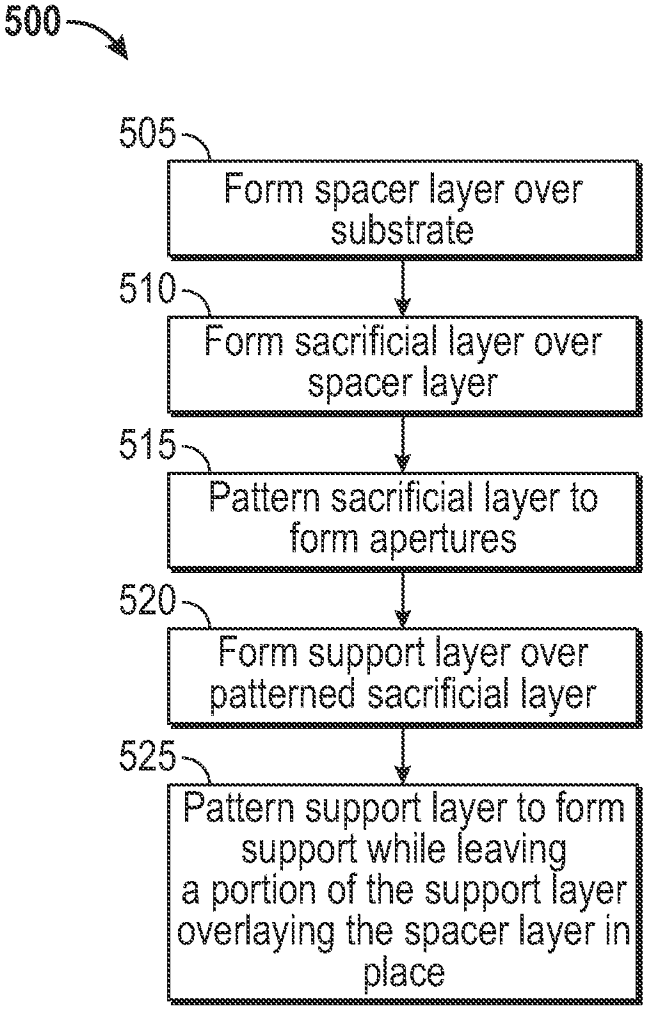
500
505
Form spacer layer over substrate
510
Form sacrificial layer over spacer layer
515
Pattern sacrificial layer to form apertures
520
Form support layer over patterned sacrificial layer
525
Pattern support layer to form support while leaving a portion of the support layer overlaying the spacer layer in place

FIG. 9

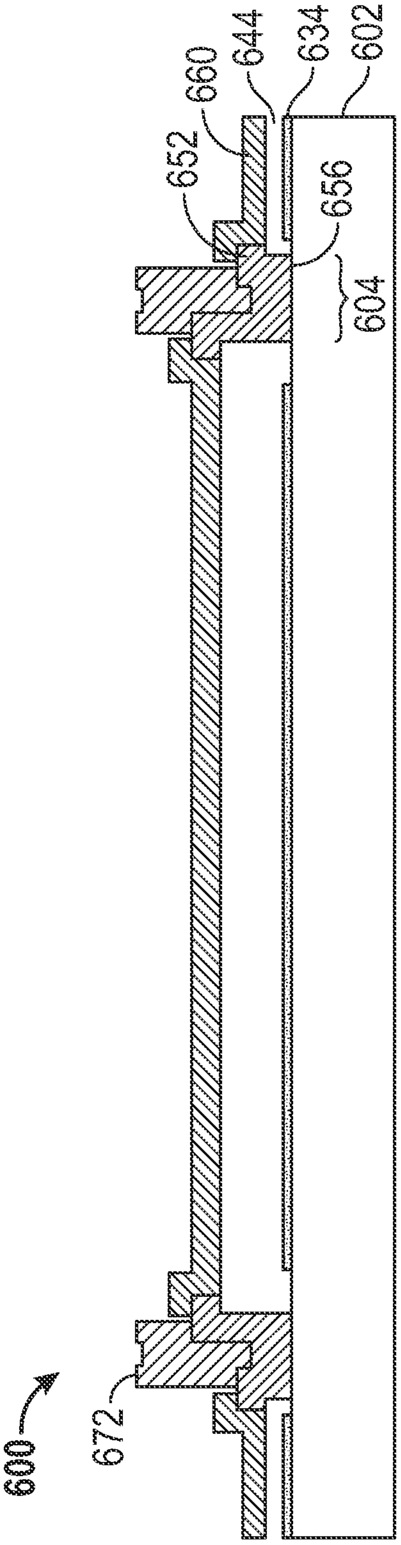

FIG. 10

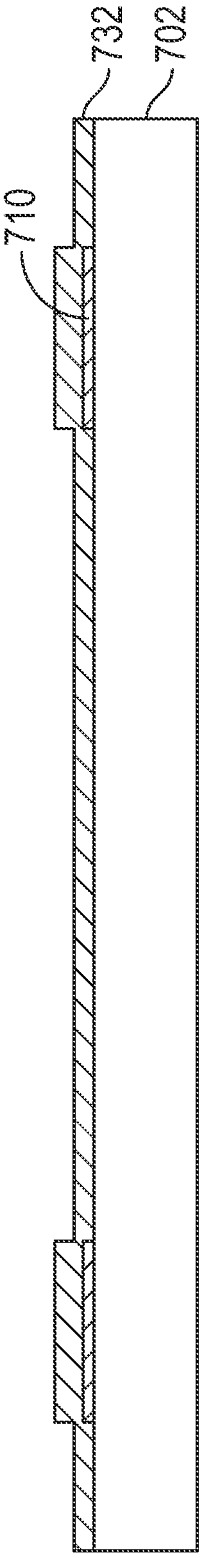

FIG. 11A

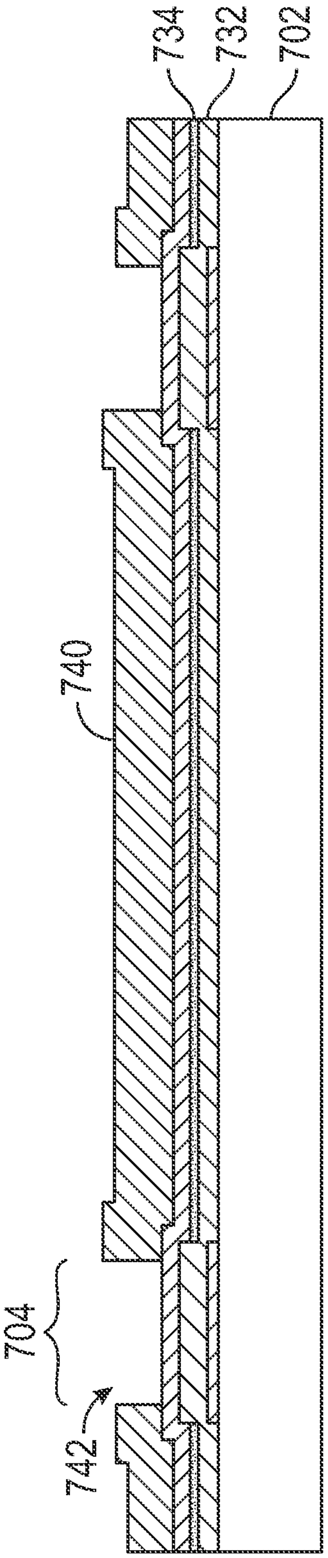

FIG. 11B

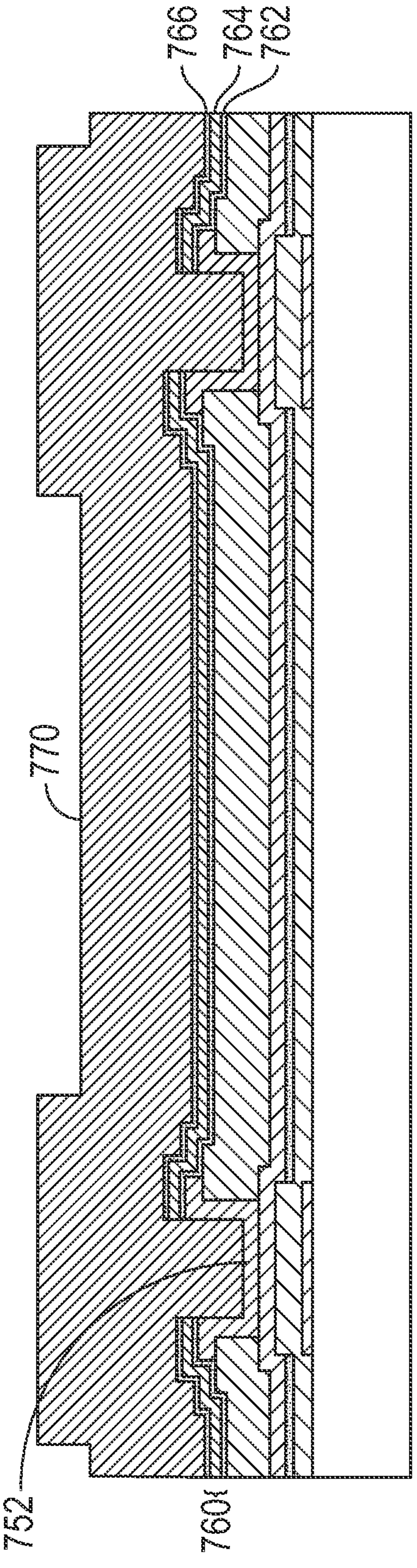

FIG. 11C

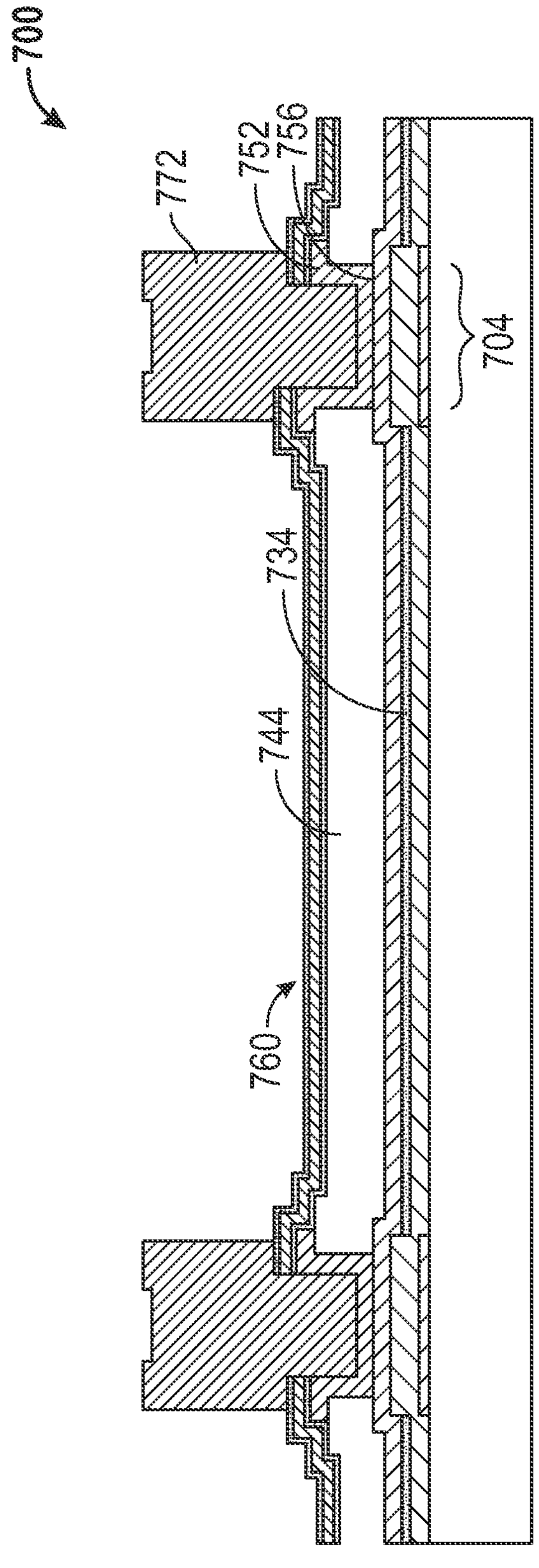

FIG. 11D

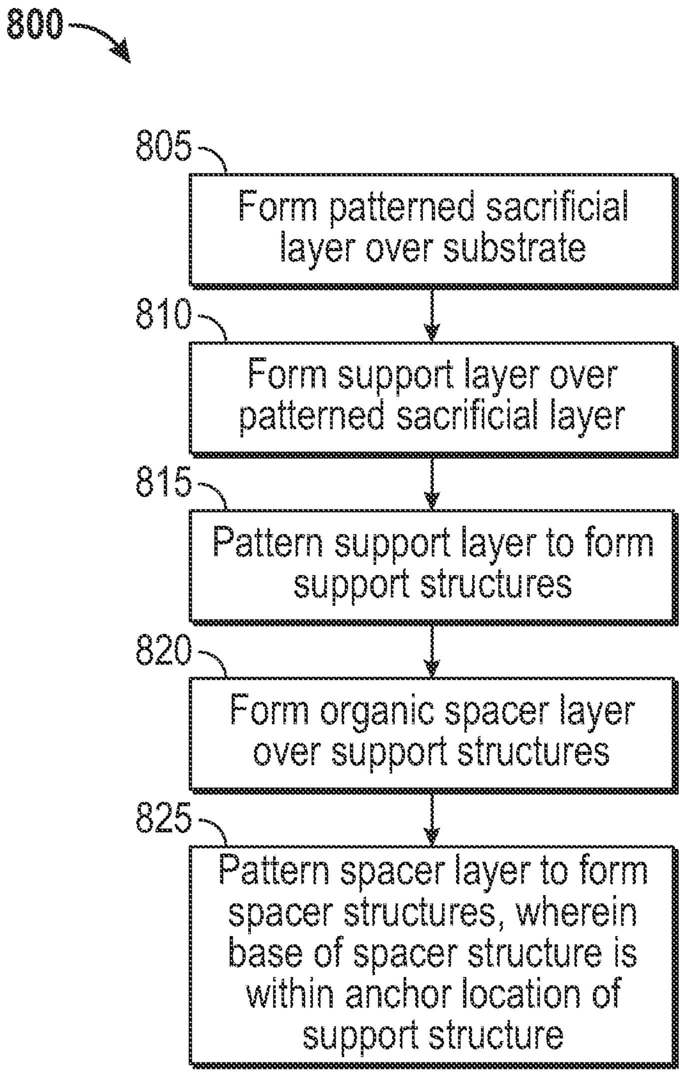
800
805
Form patterned sacrificial layer over substrate
810
Form support layer over patterned sacrificial layer
815
Pattern support layer to form support structures
820
Form organic spacer layer over support structures
825
Pattern spacer layer to form spacer structures, wherein base of spacer structure is within anchor location of support structure

FIG. 12

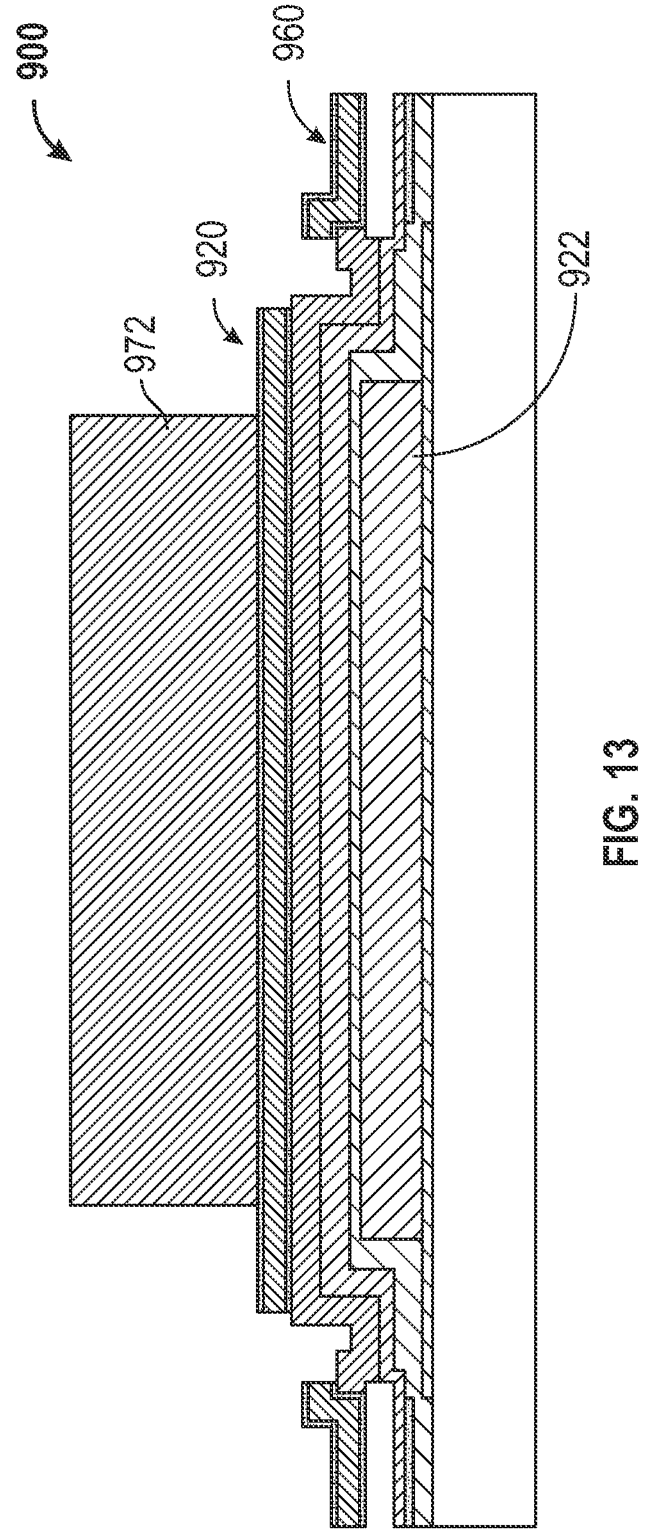

FIG. 13

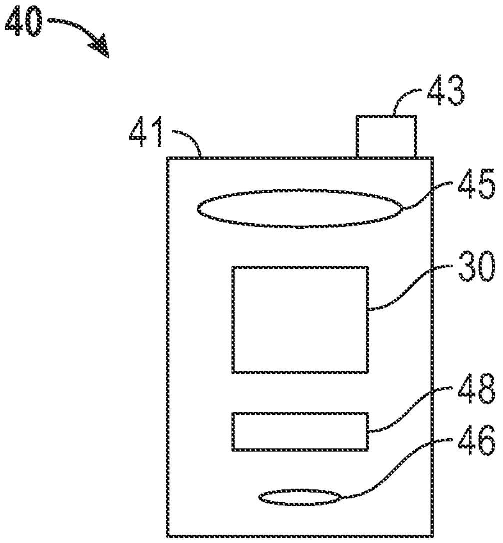

FIG. 14A

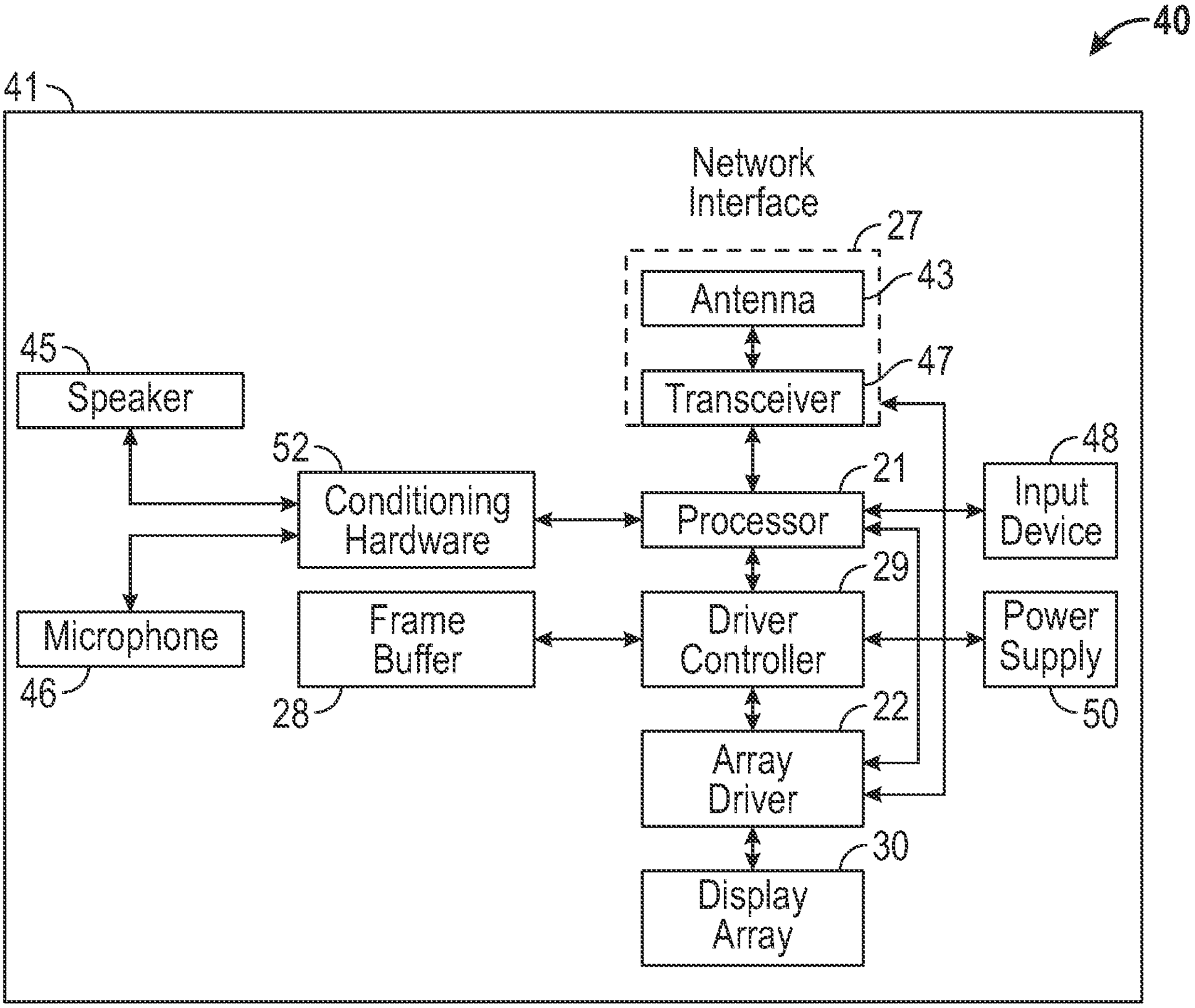

FIG. 14B

INTERNATIONAL SEARCH REPORT

International application No
PCT/US2013/051516

A. CLASSIFICATION OF SUBJECT MATTER
INV. B81B7/00
ADD.

According to International Patent Classification (IPC) or to both national classification and IPC

B. FIELDS SEARCHED

Minimum documentation searched (classification system followed by classification symbols)
B81B G02B G09G

Documentation searched other than minimum documentation to the extent that such documents are included in the fields searched

Electronic data base consulted during the international search (name of data base and, where practicable, search terms used)

EPO-Internal, WPI Data

C. DOCUMENTS CONSIDERED TO BE RELEVANT

Category*	Citation of document, with indication, where appropriate, of the relevant passages	Relevant to claim No.
X	US 2008/068697 A1 (HALUZAK CHARLES C [US] ET AL) 20 March 2008 (2008-03-20)	1-6,18, 22-26
A	abstract page 1, paragraph 7 - page 3, paragraph 25 figures 1,2A-2L -----	7-17, 19-21
X	US 2009/047479 A1 (NAKATANI GORO [JP] ET AL) 19 February 2009 (2009-02-19) abstract page 4, paragraph 64 - page 5, paragraph 88 -----	27-31
A	WO 2009/158355 A2 (QUALCOMM MEMS TECHNOLOGIES INC [US]; SAMPSELL JEFFREY B [US]) 30 December 2009 (2009-12-30) abstract figures 9,10 -----	1-31

☐ Further documents are listed in the continuation of Box C.

☒ See patent family annex.

* Special categories of cited documents :

"A" document defining the general state of the art which is not considered to be of particular relevance

"E" earlier application or patent but published on or after the international filing date

"L" document which may throw doubts on priority claim(s) or which is cited to establish the publication date of another citation or other special reason (as specified)

"O" document referring to an oral disclosure, use, exhibition or other means

"P" document published prior to the international filing date but later than the priority date claimed

"T" later document published after the international filing date or priority date and not in conflict with the application but cited to understand the principle or theory underlying the invention

"X" document of particular relevance; the claimed invention cannot be considered novel or cannot be considered to involve an inventive step when the document is taken alone

"Y" document of particular relevance; the claimed invention cannot be considered to involve an inventive step when the document is combined with one or more other such documents, such combination being obvious to a person skilled in the art

"&" document member of the same patent family

Date of the actual completion of the international search 30 September 2013	Date of mailing of the international search report 08/10/2013
Name and mailing address of the ISA/ European Patent Office, P.B. 5818 Patentlaan 2 NL - 2280 HV Rijswijk Tel. (+31-70) 340-2040, Fax: (+31-70) 340-3016	Authorized officer Ekoué, Adamah

INTERNATIONAL SEARCH REPORT

Information on patent family members

International application No

PCT/US2013/051516

Patent document cited in search report	Publication date	Patent family member(s)	Publication date
US 2008068697 A1	20-03-2008	NONE	
US 2009047479 A1	19-02-2009	CN 101353152 A	28-01-2009
		JP 2009028808 A	12-02-2009
		US 2009047479 A1	19-02-2009
		US 2011012212 A1	20-01-2011
WO 2009158355 A2	30-12-2009	CN 102076602 A	25-05-2011
		EP 2305011 A2	06-04-2011
		JP 2011526376 A	06-10-2011
		KR 20110020913 A	03-03-2011
		US 2009323165 A1	31-12-2009
		WO 2009158355 A2	30-12-2009