M. B. LLOYD.

CHILD'S GO-CART.

APPLICATION FILED FEB. 28, 1912.

1,122,517. Patented Dec. 29, 1914.

4 SHEETS—SHEET 1.

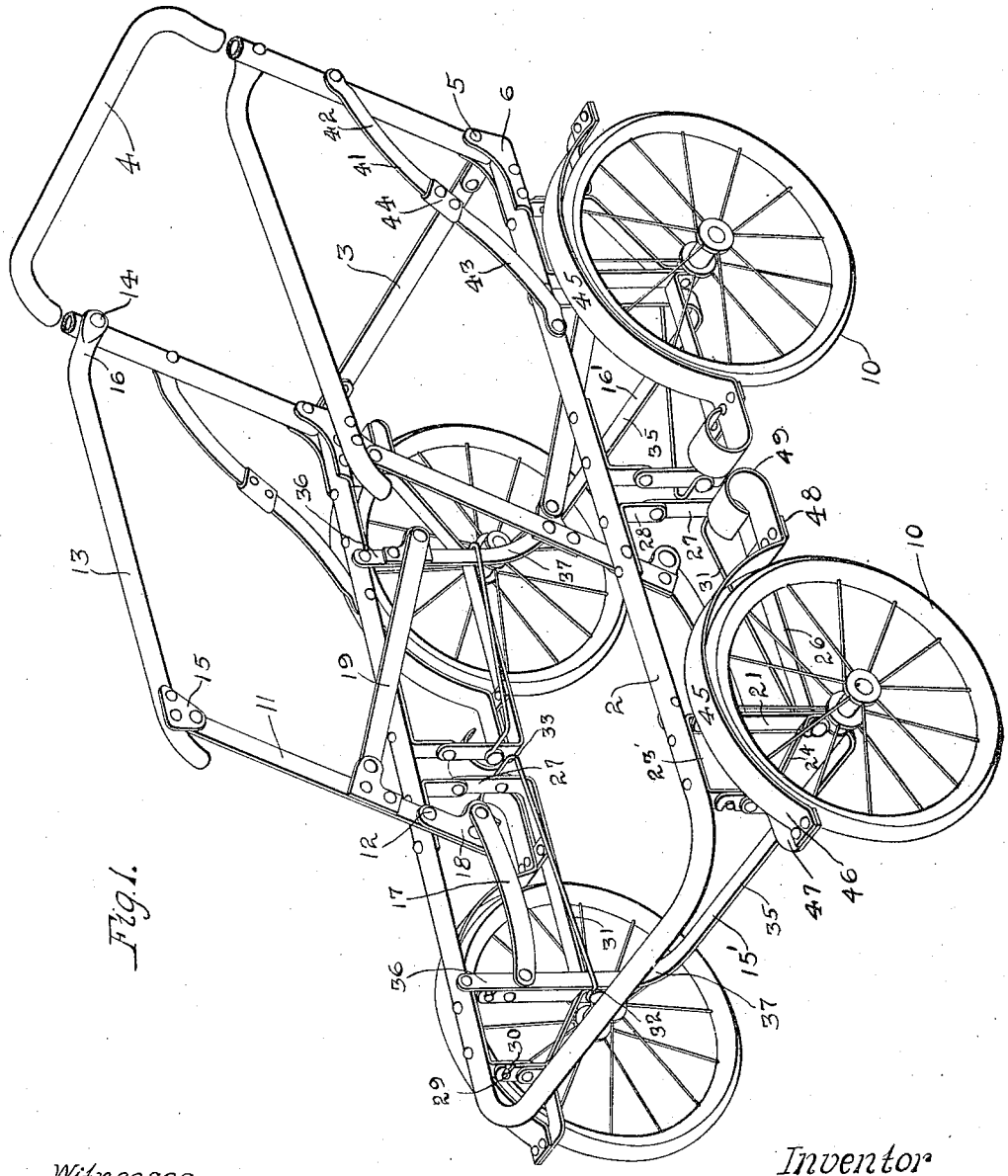

Fig. 1.

Witnesses

Robert S. McCreadie

Edward F. Wilson

Inventor

Marshall B Lloyd

by [illegible]

Atty.

THE NORRIS PETERS CO., PHOTO-LITHO., WASHINGTON, D. C.

M. B. LLOYD.

CHILD'S GO-CART.

APPLICATION FILED FEB. 28, 1912.

1,122,517.

Patented Dec. 29, 1914.

4 SHEETS—SHEET 2.

Fig. 2.

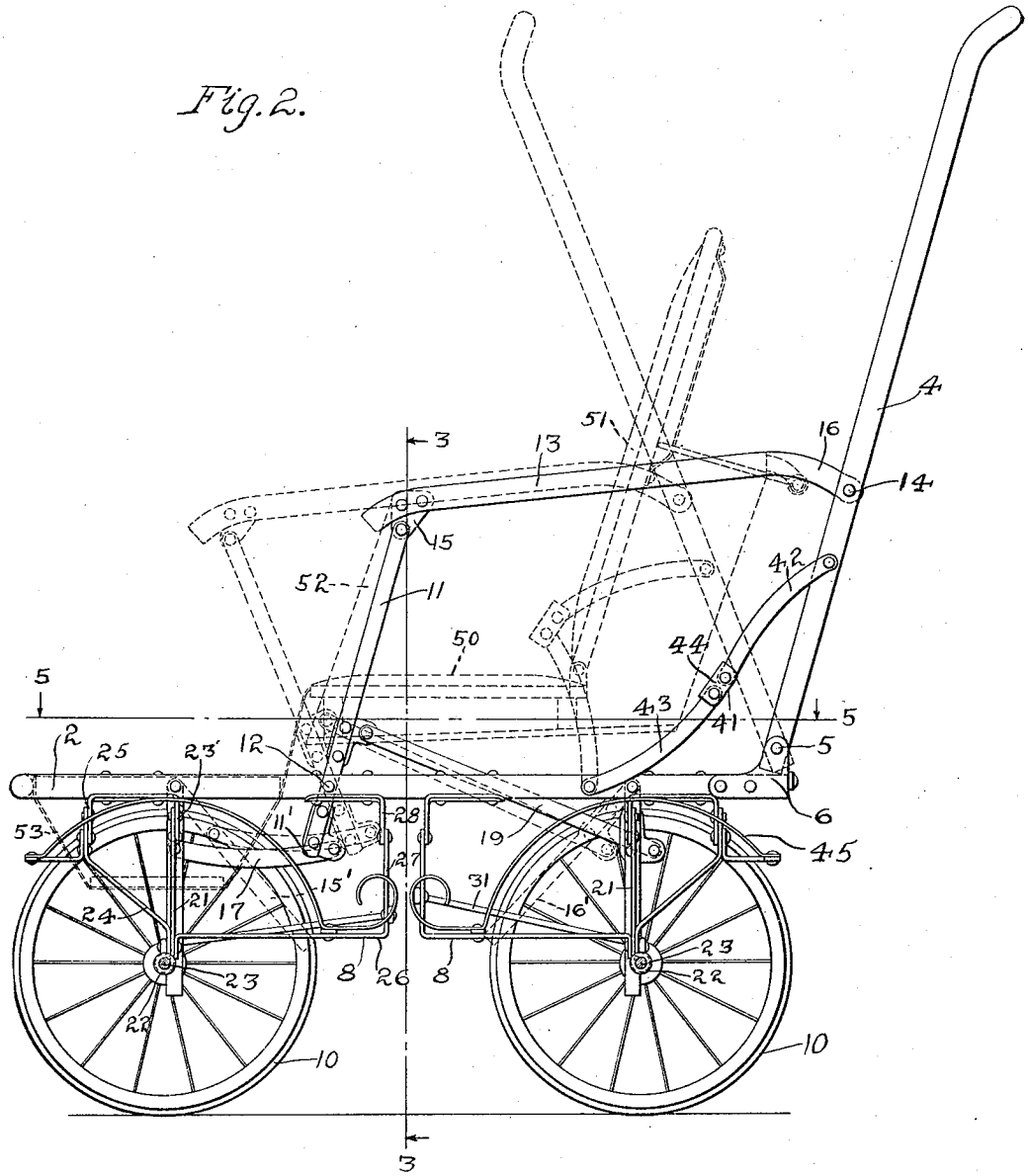

Witnesses

Robert S. McCready

Edward F. Wilson

Inventor

Marshall B. Lloyd

by [signature] Atty.

THE NORRIS PETERS CO., PHOTO-LITHO., WASHINGTON, D. C.

M. B. LLOYD.

CHILD'S GO-CART.

APPLICATION FILED FEB. 28, 1912.

1,122,517. **Patented Dec. 29, 1914.**

4 SHEETS—SHEET 3.

Fig. 3.

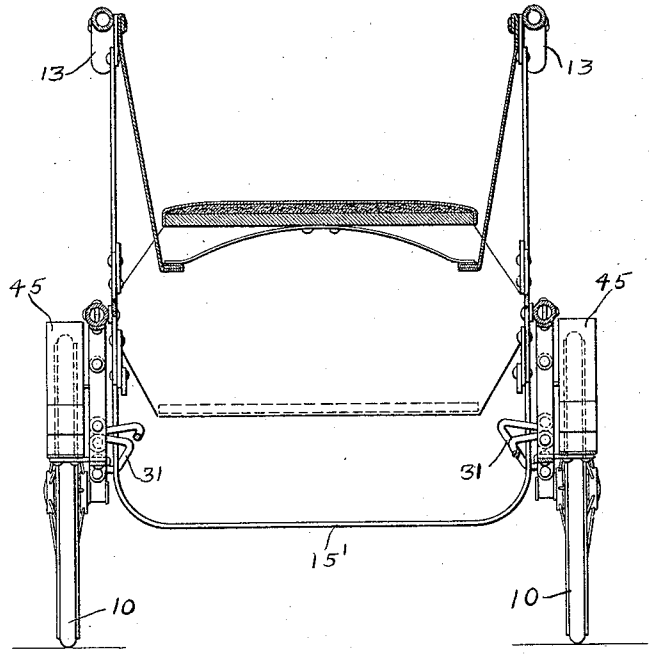

Fig. 4.

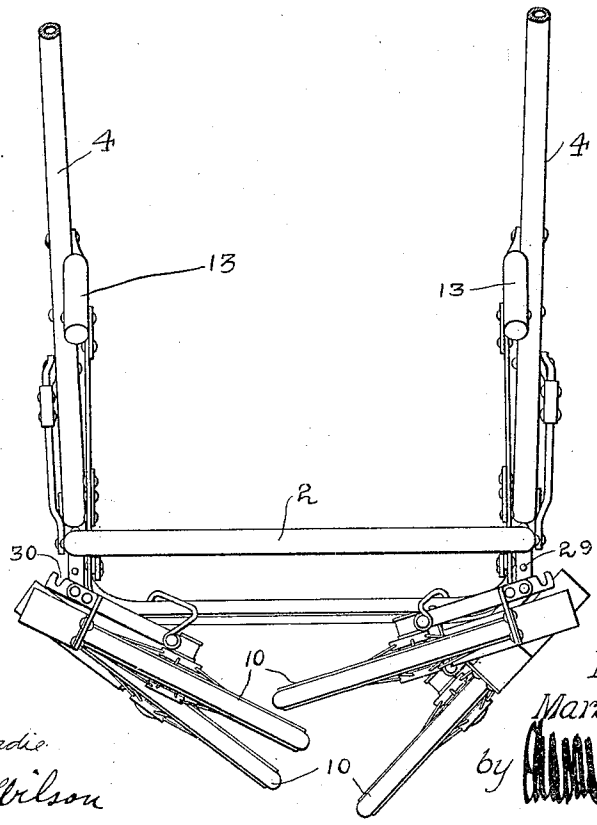

Witnesses

Robert S. McCrudie.

Edward F. Wilson

Inventor

Marshall B. Lloyd

by [illegible]

Atty.

THE NORRIS PETERS CO., PHOTO-LITHO., WASHINGTON, D. C.

M. B. LLOYD.

CHILD'S GO-CART.

APPLICATION FILED FEB. 28, 1912.

1,122,517.

Patented Dec. 29, 1914.

4 SHEETS—SHEET 4.

Fig. 5.

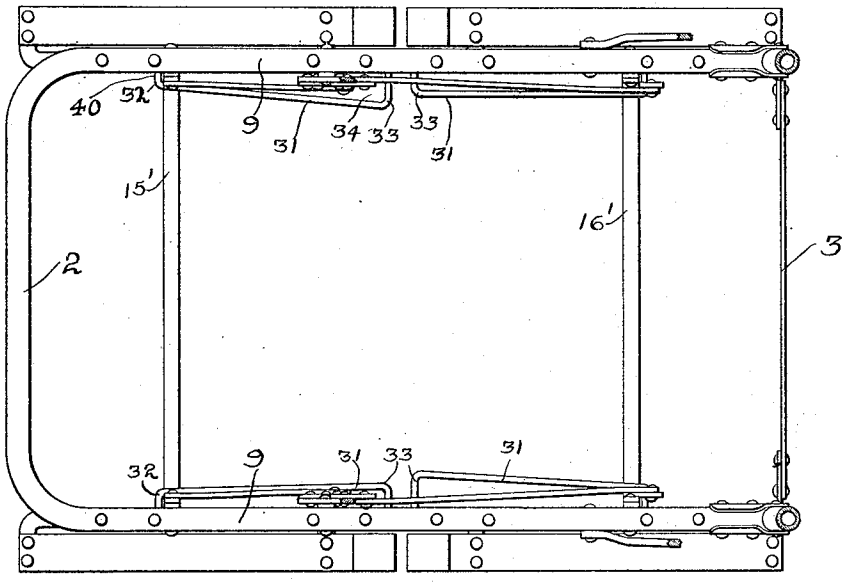

Fig. 6.

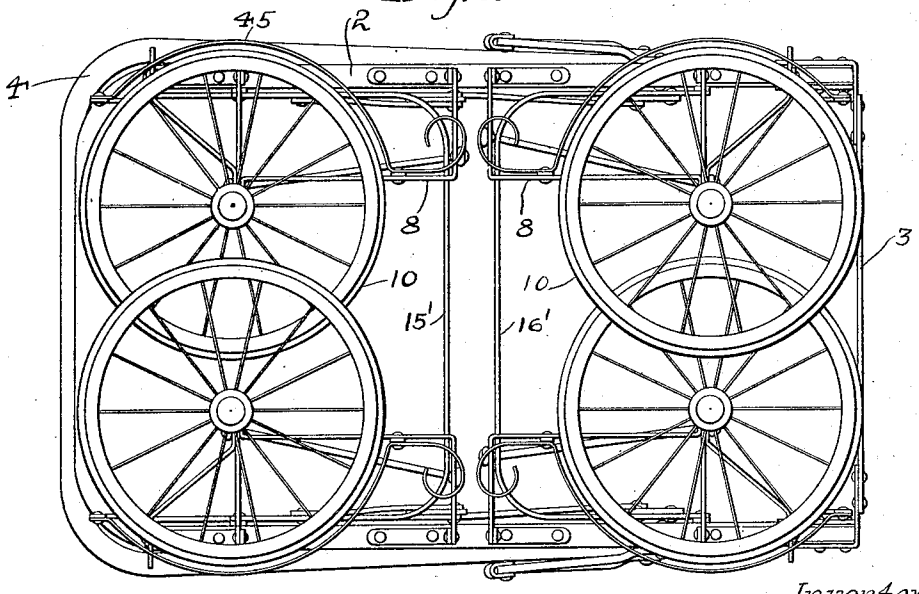

Witnesses

Robert S. McCready

Edward F. Wilson

Inventor

Marshall B. Lloyd

by [illegible]

Atty.

THE NORRIS PETERS CO., PHOTO-LITHO., WASHINGTON, D. C.

UNITED STATES PATENT OFFICE.

MARSHALL BURNS LLOYD, OF MENOMINEE, MICHIGAN, ASSIGNOR TO FERRIS & LEITH, OF CHICAGO, ILLINOIS, A FIRM COMPOSED OF WILLIAM S. FERRIS, TRUSTEE, OF ELKHART, INDIANA, AND ALEXANDER B. LEITH, TRUSTEE, OF CHICAGO, ILLINOIS.

CHILD'S GO-CART.

1,122,517. Specification of Letters Patent. Patented Dec. 29, 1914.

Application filed February 28, 1912. Serial No. 680,460.

To all whom it may concern:

Be it known that I, MARSHALL B. LLOYD, a citizen of the United States, and resident of Menominee, Michigan, have invented certain new and useful Improvements in Children's Go-Carts, of which the following is a full, true, clear, and exact description.

My invention relates to improvements in go-carts and has particular reference to foldable or collapsible carts.

The object of my invention is to provide a cart or cart structure which is of simple form and low cost, which is rigid when opened for use, and which can be completely collapsed to a compact parcel by a single movement and can likewise be extended to a condition for use from a folded condition by a single movement.

A further object is to provide a foldable or collapsible go-cart having sub-frames which are operatively joined or connected together in such manner that they are swung or folded beneath the body of the cart one in advance of another.

A further object is to provide a foldable or collapsible go-cart having a handle member hinged to the main frame at one end and sub-frames hinged to the sides of the main frame, each of the sub-frames carrying a single wheel and the handle member and sub-frames being operatively joined by a unique mechanism of simple construction whereby the sub-frames are automatically swung beneath the main frame substantially simultaneous with the swinging down or folding of the handle member.

A further object of my invention is to provide a foldable cart with two independent wheeled sub-frames at each side of the main frame, each thereof carrying a single wheel and a mud guard for the wheel, all of said sub-frames being operatively joined and connected with said handle member whereby when the handle member is folded upon the main frame each of the sub-frames with its wheel and wheel guard is automatically swung or folded beneath the main frame.

My invention consists in a go-cart having the characteristics above outlined and by means of which the above objects are attained together with others which will appear herein, and all as hereinafter fully described and particularly pointed out in the appended claims.

My invention will be more readily understood by reference to the accompanying drawings in which I have depicted one embodiment thereof.

In said drawings: Figure 1 is a perspective view of the operative structure of the go-cart, the seat and back being removed to more clearly disclose the invention; Fig. 2 is a side elevation of the go-cart, the seat and seat back being shown in dotted lines and the handle member being shown in extended position in full lines and in partly folded condition in dotted lines; Fig. 3 is a vertical section taken on the line 3—3 of Fig. 2; Fig. 4 is a front elevation of the go-cart showing the sub-frames in partly folded condition; Fig. 5 is a horizontal sectional view taken on the line 5—5 of Fig. 2, and Fig. 6 is a bottom plan view of the cart shown in its completely folded condition.

My invention is directed to that form of go-cart which is popularly known as a collapsible cart and which is characterized by the feature that the wheels are mounted upon sub-frames and the cart is provided with a pivoted handle member so joined to the wheeled sub-frames that when the handle member is folded down upon the main frame of the cart the sub-frames with their wheels are folded inwardly and upwardly beneath the main frame of the cart for the purpose of collapsing or folding the cart into a compact parcel, in which condition the cart can be readily carried from place to place. The cart is thus completely collapsible by a single operation or movement and is likewise extended to an open condition by a single movement of the handle in relation to the main frame. Further, the various parts of the cart are so arranged and associated that when the cart is opened for use and the handle member is locked in its extended position the wheeled sub-frames are automatically brought to a locked or rigid position and the whole structure is thereby maintained in a rigid condition for use.

The cart illustrated in the drawings, comprises a main frame 2 which is substantially U-shaped and to which the various other parts of the cart are attached. This frame is completed by a light cross bar 3 which connects its rear ends rigidly together. The handle member 4 is quite similar to the main frame; that is it is U-shaped and its free ends are pivotally connected to the main frame at the rear end thereof by pivots 5, upwardly extending connecting brackets 6 being provided rigidly secured to the main frame for conveniently forming this connection. Two wheeled sub-frames 8 are pivotally mounted on the main frame beneath each side 9 thereof, and each of these frames carries a wheel 10. The main structure of the cart is completed by what I term side frames which comprise side bars 11 one at each side of the cart arranged parallel with the handle bar 4 and pivotally mounted upon the main frame slightly forward of the middle portion thereof by pivots 12, and arm bars 13 which link the upper ends of the side bars to the handle bar and are pivotally connected to the handle bar at 14. The connection between the side bars 11 and arm bars 13 is formed by means of a depending bracket 15 rigidly joined to the arm bar and pivotally connected at its lower end to the upper end of the side bar. This construction together with the downwardly curved rear ends 16 of the arm bars 13 permits the side frames to fold down compactly upon and in relation to the main frame when the handle member 4 is swung forward upon its pivots to close it down upon the main frame.

To swing the wheeled sub-frames 8 from their open positions to their closed positions and likewise to swing them from their folded positions to their extended positions, I provide two swinging bails 15′ and 16′ which are arranged transversely in line with the forward and rear pairs of wheels respectively and are pivotally mounted upon the main frame at their free ends and depend therefrom beneath the main frame. These bails are practically U-shaped swinging levers, they are operatively joined to the side bars 11 which may properly be termed "the operating levers" of the cart, and they are operated or moved through the medium of the arm bars 13 when the handle member 4 is swung on its pivots. The lower ends 11′ of the side bars or operating levers 11 project below the main frame and the forward bail 15′ is operatively joined or connected to these lower ends 11′ by means of the links 17, the side bars being provided with rigid brackets 18 which project rearwardly at their lower ends to which the rear ends of the links 17 are pivotally connected. These links are curved downwardly between their ends to permit the various members to be moved into compact relation when the cart is collapsed. The rear bail 16′ is operatively connected to the side bars 11 by links 19 which connect with the levers 11 above the main frame 2, which are provided with rigid brackets 20 projecting rearwardly and to the rear ends of which the links 19 are pivotally connected.

It will now be seen that when the operating levers or side bars 11 are swung forward the forward swinging lever 15′ will be swung rearwardly on its pivots and that simultaneous therewith the rear swinging bracket 16′ will be swung forwardly on its pivots, and that both of them are thus adapted to be folded or swung upwardly upon the main frame. These swinging levers are operatively connected to the wheeled sub-frames 8 in such a manner that when they are swung upon their pivots to close them upwardly toward the main frame they will operate to swing the sub-frames inwardly beneath the main frame and thereby when the handle member is folded down upon the main frame the whole structure of the cart is simultaneously collapsed into a folded condition upon the main frame.

Each of the sub-frames 8 comprises a structure which is exceedingly light and substantially rigid in itself, and is braced both laterally and longitudinally to withstand the shocks to which structures of this kind are liable to be subjected in use. These frames each consist of a vertical member 21 which is provided with an eye 22 at its lower end to receive and hold rigidly a bearing pin 23 upon the outer end of which the wheel 10 is rotatably mounted. The upper end of this vertical member 21 is pivotally connected to the lower end of a bracket 23′ depending rigidly from the main frame. To brace the sub-frame 8 longitudinally of the cart I provide a forwardly inclined bracing member 24 rigidly connected to the vertical member 21 at its lower end and at its upper end pivotally connected to the lower end of a bracket 25 which is rigidly connected to and depends from the main frame. To further brace the vertical member 21 longitudinally of the cart I provide a rearwardly extending brace member 26 which is rigidly connected to the lower end of the vertical member 21 and extends horizontally rearward and thence is turned upward and has its upper end 27 pivotally connected to the lower end of a rigid bracket 28. The pivotal connections of the three members 21, 24 and 27 to the rigid brackets are all in one line so that the bracket as a whole can swing freely upon its pivots as upon a hinge. To prevent the brackets 8 from swinging outwardly beyond their proper positions, I

provide stop pins 29 on the rigid brackets 22 and 23 adapted to engage the upper ends of the members 21 and 24 when the brackets 8 are swung to their downwardly extended or open position and in order to make the structure compact I form the upper free ends of the members 21 and 24 into hooks 30 adapted to engage these pins as the brackets 8 are swung to their extended position. To operatively connect the swinging levers 15′ and 16′ with their respective sub-frames I provide each sub-frame with what might be termed a cam rod 31 rigidly connected at one end to the sub-frames 8 adjacent to the eye 22 and at their other ends rigidly connected to the vertical arm 27 of the member 26. Each of these cam bars 31 is spaced inwardly from its sub-frame having its ends bent outwardly as indicated at 32 and 33 (Fig. 1) and thereby it forms what might be termed a cam slot 34 (Fig. 5) between the bar 31 and the inner edge of the horizontal portion of the member 26.

The swinging levers 15′ and 16′ each comprise a horizontal cross bar 35 and vertically projecting legs 36 at each side joined to the cross bar 35 by curved portions 37 bent or curved on a relatively large radius. The legs 36 extend upwardly and terminate at the main frame where they are pivotally connected thereto. These leg portions lie within the slots 34 between the brackets 8 and cam bars 31 and as the swinging levers 15′ and 16′ are swung from an extended position to a folded position to swing the sub-frames from their extended positions to their folded positions the curved portions 37 of the levers 15′ and 16′ operate to positively withdraw the sub-frames 8 from their open to their closed positions where they lie in substantially parallel relation to the main frame. These cam bars are capable of being arranged in various relations relative to the curved portions 37 of the levers 15′ and 16′ whereby the individual brackets with their wheels are adapted to be folded in slightly different time relations for the purpose of folding one wheel in advance of another. The relative dimensions of the cart and wheels are such that when the cart is collapsed, as shown in Fig. 6, the inner portions of opposite wheels overlap each other, and consequently it is desirable that when the wheels are moved from their extended to their folded positions one wheel will be moved inwardly in advance of its opposite wheel to prevent interference between the wheels in this operation. This end is attained by varying the shapes and relative positions of the cam bars 31, as clearly indicated in Fig. 5, where the ends 33 of the various bars are shown as being of different lengths, the shorter one obviously being affected by the swinging levers in advance of those which are longer, and consequently the sub-frames to which the shorter ends 33 are connected are folded in advance of those which are connected to the longer ends.

As these carts are more or less heavy it is often desirable to be able to fold them with but one hand, and this one hand operation is aided by my invention, by means of which it is convenient to rest the cart upon either the forward or rear pair of wheels during the folding operation until the opposite pair of wheels has reached a partly folded condition, and thereafter the weight can be shifted to these partly folded wheels while the first pair are being folded. This convenient one-hand operation is made possible in the present structure by the form of operating mechanism employed and is indicated in Fig. 4 where the front pair of wheels are shown as folded in advance of the rear pair of wheels. The part 40 of the cam bars 31 which join the operating part thereof with the sub-frames 8 at the eye 22 thereof froms convenient rigid stops for the swinging levers 15′ and 16′ to prevent their movement beyond their proper extended position, and furthermore these portions 40 are short enough to cause the vertical portions 36 of the swinging levers to be wedged against the sub-frames 8 and rigidly hold them in their extended positions with the upper ends of the members 21 and 24 against the stops 29. And to further hold the structure in rigid condition when open I provide locking levers 41 in convenient positions between the handle member 4 and the main frame 2, one at each side and adapted, when the handle is in its extended position, to lock the handle, after the manner of a toggle. Each of these levers comprise two end portions 42 and 43 pivotally connected together at their inner ends by means of a connecting U member 44 and pivotally connected at their outer ends, one to the handle member and one to the main frame. When in locked condition the pivotal connections at the inner ends of these two members are adapted to pass centers with the pivotal connections of their outer ends and thereby rigidly locking the handle in its extended position.

Each of the sub-frames is provided with a guard 45 which partly encircles the upper side of the wheel and forms a mud-guard therefor, the forward end 46 of this guard is rigidly mounted upon a bracket 47 which projects forwardly from and is rigidly mounted upon the upper end of the member 24 of the sub-frame. The rear end of the guard 45 is rigidly mounted upon a bracket 48 which in turn is rigidly mounted upon the member 26 of the sub-bracket and extends outwardly therefrom. The rear end 49 of the guard 45 is curved back upon it-

self for the purpose of stiffening this portion of the guard and to give an artistic finish to the cart. The cart itself is completed by means of a seat 50 properly supported upon the main frame, and a folding seat-back 51 pivotally connected to the seat and adjustably connected with the side bars 13, and the cart is provided on each side with the usual side curtains 52 which depend from the side bars 13 and close the side frames of the cart. These three members, together with a foot-pocket, 53, are illustrated in Fig. 2 in dotted lines simply for the purpose of illustrating the cart in complete form.

It will now be seen that my cart or cart structure is one in which the wheels are or can be folded substantially simultaneously with the folding of the handle member, and yet the forward and rear pair of wheels will be folded at slightly different times and the two wheels of each pair will be folded one in advance of the other; also that the structure by which I am enabled to accomplish these various movements is exceedingly simple, and is so arranged that the cart is maintained rigidly in its extended position when open for use, and yet the cart can be and is of light weight.

As many modifications of my invention will readily suggest themselves to one skilled in the art I do not limit or confine my invention to the specific structures herein shown and described.

Having thus described my invention, I claim as new and desire to secure by Letters Patent:

1. In a collapsible go-cart, a main frame and a handle member pivotally connected thereto and movable into parallel relation therewith to collapse the cart, four independent wheel carrying brackets pivotally mounted upon the main frame, two at each side, and foldable beneath the main frame into compact relation, oppositely movable swinging bails carried on the main frame operatively connected with the brackets and the handle member and serving to fold the brackets with their wheels beneath the main frame when the handle member is folded down upon the main frame.

2. In a collapsible go-cart, a main frame and a handle member pivotally connected together and foldable to parallel relation to collapse the cart, a forward pair and a rear pair of independent wheel carrying brackets pivotally mounted beneath the main frame and foldable to compact relation therebeneath, operating bails pivotally mounted transversely of the main frame one adjacent to each pair of brackets, operative connection between the bails and the handle member adapted to swing the bails toward each other when the handle member is moved into parallel relation with the main frame and operative connection between the bails and their respective wheeled brackets whereby when the bails are swung toward each other the brackets are folded into compact relation beneath the main frame.

3. In a collapsible go-cart, a main frame and a handle member pivotally connected thereto and movable into parallel relation therewith to collapse the cart, a forward pair and a rear pair of independent wheeled brackets pivotally mounted beneath the main frame and adapted to be folded therebeneath into compact relation when the cart is collapsed, operating levers pivotally mounted upon the main frame between the forward and the rear pairs of wheels extending both above and below the main frame, operative connection between the operating levers and the handle member, an operating bail pivotally mounted on the main frame in relation to each pair of wheeled brackets, links connecting the forward bail with the operating levers below the main frame and the rear bail with operating levers above the main frame whereby when the handle member is closed upon the main frame the bails are swung toward each other.

4. In a collapsible go-cart, the combination with a main frame and a handle member pivotally mounted upon the rear end thereof and foldable forwardly into substantial parallel relation therewith to collapse the cart, four independent wheeled brackets arranged as a forward and a rear pair pivotally mounted beneath the main frame and movable from vertical positions to substantially horizontal positions therebeneath when the cart is collapsed, bracket operating mechanism connecting the brackets with the handle member, said mechanism comprising vertical operating levers pivoted between their ends upon the main frame, one at each side, arm bars linking the upper ends of the operating levers to the handle member, two U shaped levers pivotally mounted at their ends upon the main frame and depending therebeneath one adjacent each transverse pair of wheeled brackets, each of said wheeled brackets having a cam slot receiving the adjacent lever arm and links connecting the U-shaped levers with the operating levers whereby when the handle member is folded upon the main frame the brackets are folded into compact relation beneath the main frame.

5. In a collapsible go-cart, the combination with a main frame and a handle member pivotally connected thereto and movable to parallel relation therewith to collapse the cart, of a running gear which includes two separate and independent wheeled subbrackets pivotally mounted beneath one side

of the main frame, one in front of the other, and movable from a vertical position to a substantially horizontal position beneath the main frame when the cart is collapsed, cam levers depending from the main frame, one for each of said brackets, connection between said levers and the handle member for simultaneous operation therewith, the two brackets having different shaped cam slots engaging respective cam levers whereby the brackets are folded beneath the cart at different time relations when the handle member is closed down thereupon, substantially as described.

6. In a collapsible go-cart, the combination with a main frame and a handle member pivotally connected thereto and movable into parallel relation therewith to collapse the cart, of a forward pair and a rear pair of subbrackets, each said subbracket being independently hinged beneath the main frame and each thereof carrying a single wheel and provided with an elongated horizontal cam slot, and a bracket operating lever for each said pair of subbrackets pivotally mounted on the frame and having portions passing through said slots for swinging said brackets, the slots of the different brackets being of different dimensions for the purpose of moving one bracket in advance of another and one pair in advance of the other pair, operating connection between said levers and the handle member for swinging said levers simultaneously with the movement of the handle member and means for locking the cart in open or extended condition, substantially as described.

7. In a collapsible go-cart, the combination with a main frame and a handle member pivotally connected together and movable to substantially parallel relation to collapse the cart, of a forward pair and a rear pair of sub-brackets, each said sub-bracket being independently pivotally mounted upon and beneath the frame and each said bracket carrying a single wheel and having an elongated cam slot, a U-shaped lever pivotally mounted upon the main frame, one for each pair of sub-brackets adapted to co-act with the cam slots thereof to swing the brackets inwardly and outwardly in relation to the main frame, and operating connection between the levers and the handle member adapted to swing the brackets beneath the main frame when the handle member is folded down upon the main frame, one pair in advance of the other pair and vice versa, substantially as described.

8. In a collapsible go-cart, the combination with a main frame and a handle member pivotally mounted thereon and movable forwardly thereupon to collapse the cart, of a forward pair and a rear pair of independently mounted sub-brackets hinged beneath the main frame and independently movable from vertical positions to substantially parallel relation to and beneath the main frame, operative connection between the sub-brackets and the handle member for automatically swinging the sub-brackets from a closed to an open position when the handle member is moved to its extended position, and over-lapping co-acting stop parts carried by the frame and the sub-brackets, limiting the outward movement of the sub-brackets.

9. In a collapsible go-cart, the combination with a main frame and a handle member pivotally mounted thereon and movable forwardly thereupon to collapse the cart, of four independent wheeled sub-brackets pivotally mounted beneath the main frame, two at each side and independently movable from folded positions beneath the main frame to vertical operative positions, mechanism operatively connecting the sub-brackets with the handle member for automatically swinging the sub-brackets from their closed positions to their operative positions when the handle member is moved to its extended position. stop pins carried by the main frame, one for each sub-bracket and a stop arm rigid with each sub-bracket for engagement with its respective stop pin for limiting the outward movement of the sub-bracket.

10. In a collapsible go-cart the combination with a main frame and a handle member pivotally mounted thereon and movable forwardly thereupon to collapse the cart, in combination with a forward and a rear pair of wheeled brackets pivotally mounted beneath the cart and foldable inwardly and upwardly thereupon, each of said brackets having a cam slot extending from its wheel toward the middle portion of the cart, a swinging lever pivotally mounted on the frame of the cart between each pair of wheels and having parts extending through respective cam slots and adapted to swing to vertical positions beneath the cart to brace and hold the wheeled brackets in extended positions, said levers being adapted to engage the end of the slots adjacent to the wheels to limit their movement in one direction and having engagement with the wheeled brackets to hold the brackets in vertical position, coacting stop parts on the frame and brackets limiting the outward movement of the brackets, which stop parts are maintained in locked engagement by means of the swinging levers, and a lever-and-link mechanism connecting both said swinging levers to the handle member,

whereby the swinging levers are moved toward each other and toward the inner ends of the respective cam slots when the cart is collapsed to retract the wheeled brackets from their extended positions to their folded positions.

In testimony whereof, I have hereunto set my hand, this 18th day of January, 1912, in the presence of two subscribing witnesses.

MARSHALL BURNS LLOYD.

Witnesses:
M. SIMON,
JOHN R. LEFEVRE.

Copies of this patent may be obtained for five cents each, by addressing the "Commissioner of Patents, Washington, D. C."