Aug. 1, 1967

M. F. BEDOCS ET AL

3,334,198

MULTI-POSITION ELECTRICAL SWITCH
WITH IMPROVED CONTACT STRUCTURE

Filed Dec. 29, 1965

2 Sheets-Sheet 1

FIG. 1

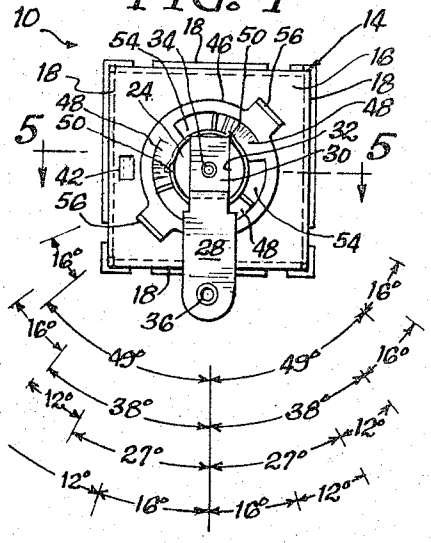

FIG. 2

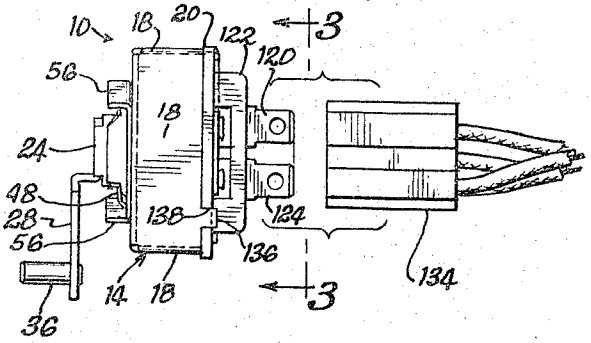

FIG. 3

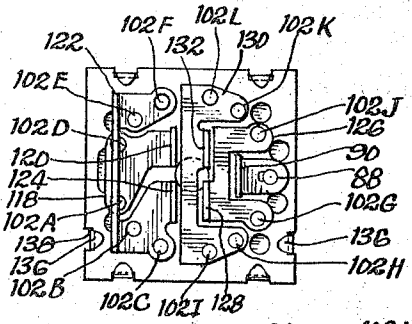

FIG. 6

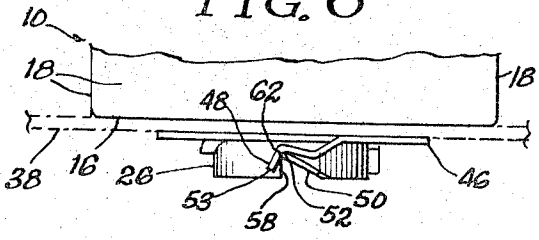

FIG. 5

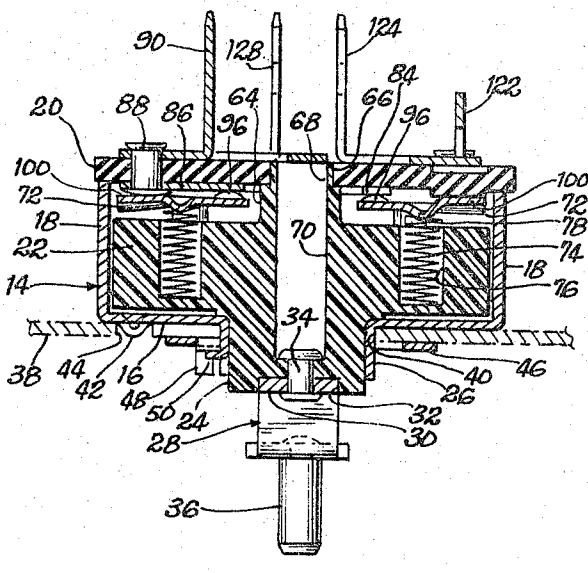

FIG. 4

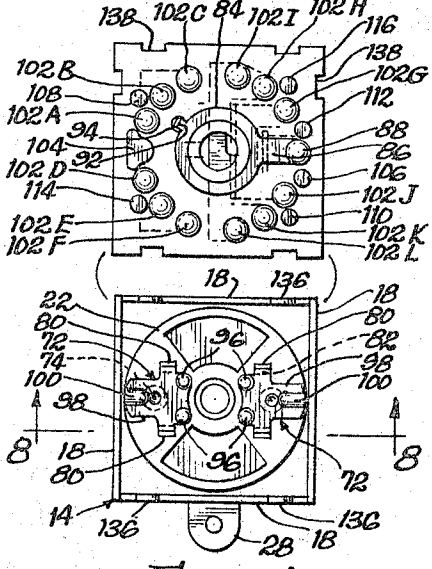

INVENTORS
Michael F. Bedocs
William N. Schink
by McDougall, Hersh & Scott
Attys

Aug. 1, 1967

M. F. BEDOCS ET AL

3,334,198

MULTI-POSITION ELECTRICAL SWITCH
WITH IMPROVED CONTACT STRUCTURE

Filed Dec. 29, 1965

2 Sheets-Sheet 2

FIG. 7

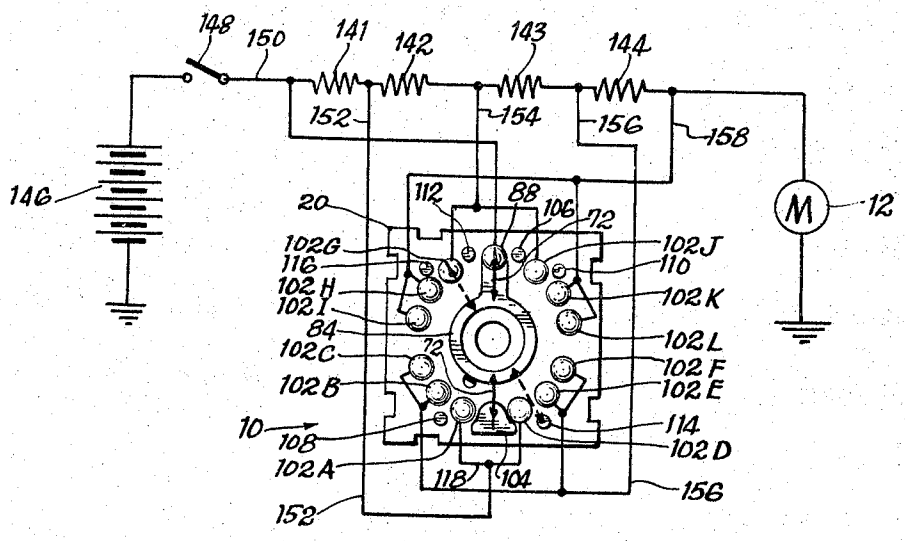

FIG. 8

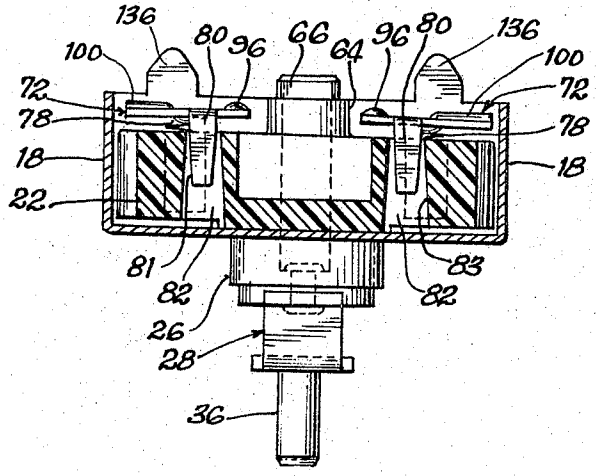

INVENTOR
Michael F. Bedocs
William N. Schink
by McDougall, Hersh & Scott
Attys

United States Patent Office

3,334,198

Patented Aug. 1, 1967

3,334,198

MULTI-POSITION ELECTRICAL SWITCH WITH IMPROVED CONTACT STRUCTURE

Michael F. Bedocs, Wilmette, and William N. Schink, Crystal Lake, Ill., assignors to Indak Manufacturing Corp., Northbrook, Ill., a corporation of Illinois

Filed Dec. 29, 1965, Ser. No. 517,259
3 Claims. (Cl. 200—11)

This invention relates to electrical switches.

One object of the present invention is to provide a new and improved electrical switch having a relatively large number of operating positions, spaced closely together.

A further object is to provide a new and improved electrical switch which is arranged so that the spacing between the successive operating positions may be substantially less than the spacing between the adjacent contact points of the switch, so that large, rugged contact points may be employed while providing a large number of operating positions.

Another object is to provide a new and improved electrical switch which is extremely compact in construction, yet provides a large number of operating positions.

A further object is to provide a new and improved electrical switch in which a large number of operating positions are achieved by providing a pluarlity of contactors which are engageable with a plurality of groups of contact points, the contact points of the various groups being relatively staggered so that a circuit is established by each contactor in turn.

It is a futrher object to provide a new and improved switch having one or more insulating bosses or points which are engageable by a contactor as it moves between adjacent contact points, so as to reduce or eliminate the overlapping interval in which the contactor engages both of the adjacent contact points.

Another object is to provide an electrical switch having a new and improved arrangement for engaging a mounting or retaining ring.

Further objects and advantages of the present invention will appear from the following description, taken with the accompanying drawings, in which:

FIG. 1 is a somewhat diagramatic front elevational view of an electrical switch to be described as an illustrative embodiment of the persent invention.

FIG. 2 is a side elevation showing the switch and its connector.

FIG. 3 is a rear elevation of the switch, taken along the line 3—3 in FIG. 2.

FIG. 4 is a disassembled view showing the switch with its contact plate removed, to illustrate the rear sides of the contactors and the front side of the contact plate.

FIG. 5 is an enlarged longitudinal section taken generally along the line 5—5 in FIG. 1.

FIG. 6 is a fragmentary enlarged plan view showing the retaining ring and the lugs or ears for engaging the retaining ring.

FIG. 7 is a circuit diagram illustrating one possible application of the multi-position switch.

FIG. 8 is a fragmentary sectional view taken generally along the line 8—8 in FIG. 4.

As already indicated, the drawings illustrate an electrical switch **10** which is particularly well suited for automotive service, but will find many other applications. The illustrated switch is intended particularly for controlling the speed of a blower motor **12** (FIG. 7) in a heating and air-conditioning system for automobiles or the like. The switch is adapted to be operated by an automatic control unit which may be regulated by a thermostat, so that the speed of the blower motor will be regulated automatically according to the need for heating or cooling of the automobile.

The illustrated switch **10** comprises a casing **14** made of metal or other suitable material. The casing **14** may be of any suitable shape but is illustrated as being square or rectangular in shape. Thus, the casing **14** has a front wall **16** and four side walls **18**. The rear of the casing **14** is closed by a contact supporting member or plate **20**, preferably made of an insulating material.

As illustrated to best advantage in FIGS. 4 and 5, the switch **10** is provided with a carirage **22** which is movable within the casing **14**. The illustrated carriage **22** is of a rotary type. Thus, the carriage **22** has a front shaft or hub portion **24** which is rotatably received in a sleeve member **26** on the front wall **16** of the casing **14**. The illustrated sleeve **26** is formed integrally with the front wall **16**.

An operating lever **28** may be secured to the front end of the shaft portion **24**. In the illustrated construction, the lever **28** has an inner end portion **30** which is seated in a transverse groove **32** formed in the front end of the shaft **24**. A rivet or other fastener **34** is provided to secure the lever **28** to the shaft **24**. As shown, the outer end of the lever **28** is fitted with a crank pin **36** for connecting the lever to the automatic control unit. It will be understood that the switch may readily be arranged for manual operation, if desired.

The switch **10** is adapted to be secured to a mounting panel **38**, which may be provided at some convenient location on the automobile or the like with which the switch is to be used. As shown, the sleeve member **26** extends forwardly through an opening **40** in the panel **38**. A locating tab **42** is formed on the front wall **16** of the casing and is adapted to be received in an opening or slot **44** in the panel **38**.

The switch **10** is secured to the panel **38** by a retaining ring **46** which is mounted around the sleeve member **26**. The retaining ring **46** is formed with a plurality of arcuate spring fingers **48** for engaging lugs or ears **50** on the sleeve member **26**. Each of the fingers **48** is bent to provide a notch or recess **52** which cooperates with one of the ears **50** to provide a detent action. Thus, each of the spring fingers **48** is detained by one of the ears **50**.

The ring **46** is removed by rotating it through approximately 60 degrees in a counterclockwise direction, from the position of the ring as shown in FIG. 1. The ring **46** may then be moved forwardly off the sleeve member **26**. Arcuate openings **54** are formed in the retaining ring **46** between the spring fingers **48** to provide clearance for the ears **50** when the ring is removed. The openings **54** are moved opposite the ears **50** when the retaining ring **46** is rotated counterclockwise to permit removal of the ring as already described.

The retaining ring **46** is preferably provided with a pair of forwardly projecting lugs or handles **56**, so that the ring may readily be gasped and manipulated. When the ring **46** is to be installed, it is slipped rearwardly over the sleeve member **26**. The openings **54** are aligned with the ears **50** so that the ring may be slipped past the ears. The ring **46** is then rotated clockwise through approximately 60 degrees so as to move the spring fingers **48** be-

hind the ears **50**. The spring fingers **48** are effective to clamp the switch **10** against the rear side of the panel **38**.

In the illustrated construction, the ears **50** are formed in a new and improved manner by lancing or slitting the sleeve member **26** and then bending the ears **50** outwardly. Thus, to form each ear **50**, the front end of the sleeve **26** is formed with a longitudinal slip **58**. The ear is then bent outwardly to form a projection which is triangular in shape. The spring fingers **48** on the retaining ring **46** are engageable with the slit edges **62** of the triangular ears **50**. Each of the slit edges **62** provides a stop which is engageable by the outwardly projecting lug **53** on the corresponding spring finger **48** to limit the angular rotation of the retaining ring **46**. The slit edges **62** fit snugly into the detent notches **52** in the spring fingers **48** to prevent the accidental loosening of the retaining ring.

The carriage **22** is preferably made of various plastics or other suitable insulating materials. As shown to best advantage in FIG. 5, the carriage **22** is formed with a rear shaft member **64** having a reduced rear portion **66** which is rotatably received in a central opening **68** formed in the contact supporting plate **20**. A longitudinal bore **70** is formed in the carriage **22** to receive the rivet **34** which is employed to secure the operating lever **28** to the front end of the carriage. The bore **70** opens from the rear of the carriage **22** and extends through the rear shaft portion **64** and the main or body portion of the carriage **22**, and also part way through the front shaft portion **24**.

The insulating carriage **22** is preferably provided with a plurality of contactors **72** which are movable with the carriage. Two such contactors **72** are provided in the illustrated switch. Each contactor **72** is pressed or biased rearwardly by a spring **74** which is preferably in the form of a compression coil spring. The illustrated springs **74** are received in bores or recesses **76** formed in the rear side of the carriage **22**. The rear end of each spring **74** is located and retained by a projection or boss **78** which is formed on the corresponding contactor **72**.

Each contactor **72** is located and retained on the carriage **22** by a pair of prongs or tabs **80** which project forwardly from the contactor. Slots or recesses **82** are formed in the carriage **22** to receive the prongs **80**. It will be understood that the prongs **80** are slidable forwardly and rearwardly in the slots **82**.

The contactors **72** are movable into engagement with a series of contact points and insulating bosses, mounted on the front side of the contact supporting plate **20**. The arrangement of the contact points and insulating bosses will be described in detail presently. Each of the locating prongs **80** on the contactors **72** is preferably formed with a tapered front end portion **81**, to enable the contactors to rock appreciably as they move up and over the various contact points. In addition, each of the slots **82** is preferably formed with a tapered front end portion **83** to provide for such rocking movement of the contactors. Each of the contactors **72** is preferably arranged to establish circuits between a contact ring **84** and the various contact points. In the illustrated construction, each of the contactors **72** engages the contact ring **84** at all times, in all of the operating positions of the switch. The contact ring **84** is in the form of an annular plate of copper or other suitable material, mounted on the front side of the insulating plate **20**. As illustrated, the contact ring **84** has an outwardly extending radial arm **86** which is secured to the insulating plate **20** by a contact ring **88** which extends through the arm **86** and the insulating plate **20**. A terminal or prong **90** is secured against the rear or external side of the insulating plate **20** by the rivet **88**. The contact ring **84** is located on the plate **20** and is prevented from rotating about the rivet **88** by a tab **92** which projects rearwardly from the ring, into an opening **94** formed in the plate **20**.

Each contactor **72** is preferably provided with one or more rearwardly projecting contact bosses or points **96** to ride along the contact ring **84** when the carriage **22** is rotated. It is preferred to provide a pair of such contact bosses **96** on each contactor, so that each contactor will have three points of contact with the contact ring and the various contact points. To engage the contact points, each contactor **72** is preferably provided with an outwardly projecting radial arm **98**, formed with a rearwardly projecting ridge or boss **100**. However, the contactor may assume a variety of shapes and forms. Each of the illustrated ridges **100** is generally cylindrical in curvature and is rearwardly convex.

To provide a multiplicity of positions, the switch **10** is preferably provided with a considerable number of contact points **102**, mounted on the rear side of the insulating plate **20**. Twelve of the contact points **102** are provided in the illustrated switch. For individual identification, the contact points **102** are designated **102A–L** in FIGS. 4 and 7.

The contacts **102A–L** are arranged in two groups, corresponding to the two contactors **72**. The contacts **102A–F** form one group and are adapted to be engaged by one of the contactors **72**. The second group comprises the contactors **102G–L**, which are adapted to be engaged by the other contactor **72**.

Generally speaking, the contacts of one group are staggered or offset relative to the contacts of the other group, so that the two contactors establish successive circuits in turn. This arrangement makes it possible to provide approximately twice as many operating positions as would be possible with a single contactor.

In the initial or OFF position of the switch, one of the contactors **72** engages the contact rivet **88** which is connected to the contact ring **84**, so that no circuit is established by this contactor. In FIG. 7, the contactors **72** are shown diagrammatically in full lines in their initial positions. It will be seen that the other contactor **72** is between the contact points **102A** and **102D** so that no circuit is established by this contactor. An insulating boss or projection **104** is provided on the insulating plate **20** between the contacts **102A** and **102D** for engagement by the contactor. This particular insulating boss **104** is generally triangular in shape, to occupy most of the space between the contact points **102A** and **102D**, but the boss **104** has a rounded inner portion opposite the contact ring **84**. The boss **104** is preferably in the form of a semi-perforation, pressed or offset from the insulating plate **20**.

When the contactors **72** are rotated clockwise from their initial positions of FIG. 7, the lower contactor **72** moves from the insulating boss **104** into engagement with the contact point **102A** so as to establish a circuit between this contact point and the contact ring **84**. The upper contactor **72** moves into a position between the contact rivet **88** and the contact point **102J**. A rearwardly projecting insulating boss **106** is preferably provided on the insulating plate **20** between the contact points **88** and **102J** for engagement by the contactor. The insulating boss **106** is preferably in the form of a semi-perforation pressed or offset from the insulating plate **20**. The boss **106** holds the contactor **72** away from the contact points **88** and **102J** and prevents the contactor from engaging both contact points simultaneously. Moreover the insulating boss **106** promotes the smooth and easy movement of the contactor between the rearwardly projecting contact points **88** and **102J**. As already indicated, the contact points **102A** and **102J** are staggered or offset relative to each other so that the diametrically opposite contactors **72** engage the contact points in sequence rather than simultaneously. The insulating boss **106** is diametrically opposite from the contact point **102A**.

When the contactors **72** are moved an additional amount in a clockwise direction, they come into their third operating position, in which the upper contactor engages the contact point **102J**. The lower contactor **72** is between the contact points **102A** and **102B**. An insulating boss **108** is preferably provided on the insulating plate **20** for

engagement by the lower contactor in this position. The insulating boss **108** projects rearwardly from the plate **20** and preferably is in the form of a semi-perforation pressed or offset from the plate. The boss **108** projects rearwardly to a sufficient extent to hold the lower contactor away from the rounded contact points **102A** and **102B** so as to prevent the contactor from forming a bridge between the contact points in this position. Thus, the spacing between the contact points **102A** and **102B** may be made quite close while preventing or minimizing the bridging action of the contactor between the contact points.

A further clockwise movement of the contactors **72** brings them to their fourth operating position, in which the lower contactor engages the contact point **102B** to establish a circuit between this contact point and the contact ring **84**. The upper contactor is between the contact points **102J** and **102K**. Another insulating boss **110** is preferably provided in this location, to hold the contactor away from the contact points **102J** and **102K**. The boss **110** is preferably in the form of a semi-perforation pressed rearwardly from the insulating plate **20**.

Further clockwise movement of the contactors **72** brings the upper contactor against the contact point **102K**, in the fifth operating position of the switch. The lower contactor is between the contacts **102B** and **102C**. In this particular switch, the contact points **102B** and **102C** are connected together, so that there is no need to provide a semi-perforated boss between these contact points. Similarly, the contact points **102K** and **102L** are connected together. The contact point **102C** represents an extension of the contact point **102B**. Likewise, the contact point **102L** represents an extension of the contact point **102K**.

The contactors **72** may be moved counterclockwise from the initial position of FIG. 7 to four more operating positions which will be designated the sixth through the ninth positions. These additional positions correspond generally to the second through the fifth positions. In the sixth position, the lower contactor **72** engages the contact point **102D**, while the upper contactor engages an insulating boss **112**, preferably in the form of a semi-perforation pressed rearwardly from the plate **20** between the contact points **88** and **102G**. In the seventh position, the upper contactor **72** engages the contact point **102G**, while the lower contactor engages another insulating boss **114**, between the contact points **102D** and **102E**.

In the eighth position, the lower contactor engages the contact point **102E**, while the upper contactor engages still another insulating boss **116**, preferably in the form of a semi-perforation pressed rearwardly from the plate **20** between the contact points **102G** and **102H**. In the ninth position, the upper contactor **72** engages the contact point **102H**, while the lower contactor is between the contact points **102E** and F. In this particular switch, the contact points **102E** and F are connected together, so that the contact point **102F** represents an extension of the contact point **102E**. Similarly, the contact points **102H** and **102I** are connected together.

The semi-perforated bosses **106, 108, 110, 112, 114** and **116** are preferably circular in shape and are of a height corresponding generally to the height of the contact points **102**. The insulating bosses are spaced somewhat farther from the contact ring **84** than are the contact points **102**, but the contact ridges or bars **100** on the contactor **72** extend outwardly a sufficient distance to engage the insulating bosses, as well as the contact points. Preferably, the bosses are flat-topped.

The illustrated switch can be employed to establish nine different sets of circuits for the nine different positions. However, in this particular switch the corresponding contact points on the opposite sides of the initial position of the switch are connected together so that the circuits established by the switch are the same in the sixth through the ninth positions as they are in the second through the fifth positions. It will be evident from FIG. 3 that the contact points **102A** and D are connected together by a bar or plate **118** which is formed with a terminal or prong **120**. The contact points are in the form of rivets which extend through the plate **20** and are employed to secure the terminal bar **118** to the rear side of the plate.

In this particular switch, the contact points **102B**, C, E and F are all connected together by means of a bar or plate **122** which is formed with a terminal prong **124**. The contact points **102G** and J are connected together by a bar or plate **126** which is formed with a terminal prong **128**. The remaining contacts **102H**, I, K and L are all connected together by a plate **130** which is formed with a terminal prong **132**.

As indicated in FIG. 2, the terminal prongs **90, 120, 124, 128** and **132** are arranged to receive a connector or receptacle **134**, whereby the desired circuit connections may be made to the switch. The receptacle **134** may readily be connected to and disconnected from the switch.

The side walls **18** of the casing **14** are preferably formed with a plurality of tabs **136** for securing the insulating plate **20** to the rear side of the casing. The illustrated tabs **136** extend through locating notches **138**, formed in the edges of the plate **20**, and are bent inwardly behind the plate **20**.

As already indicated, FIG. 12 illustrates one possible circuit whereby the switch **10** may be employed to control the speed of the motor **12** which may be employed to operate a blower in an automotive heating and ventilating unit. The speed of the motor **12** may be varied by introducing a series of resistors **141, 142, 143** and **144** into the circuit between the motor **12** and the automotive battery **146**. This circuit also includes a switch **148**, which may be the ignition switch of the automobile. The switch **148** is connected between the battery **146** and a lead **150** to which the contact point **88** is connected. Thus, when the switch **148** is closed, the battery voltage is supplied to the contact point **88** and the contact ring **84**, and thence to the contactors **72**.

When the switch **10** is in its initial or OFF position, all of the resistors **141–144** are connected in series with the motor **12**, so that it operates at low speed. A lead **152** is preferably connected between the junction of the resistors **141** and **142** and the contact points **102A** and D. Another lead **154** is connected between the junction of the resistors **142** and **143** and the contact points **102G** and J. The junction of the resistors **143** and **144** is connected by means of a lead **156** to the contact points **102B**, C, E and F. The other end of the resistor **144** is connected to the contact points **102H**, I, K and L by means of a lead **158**. As the contactors **72** are moved to successive positions on either side of the initial position, the resistors **141–144** are successively short-circuited so that all of the resistors are out of the circuit in the fifth and ninth positions of the switch. In these positions, the motor **12** operates at full speed.

It may be helpful to offer a brief summary of the operation of the illustrated switch **10**. In FIG. 7, the contactors **72**, shown diagrammatically, are illustrated in full lines in the initial or OFF position of the switch. The upper contactor **72** engages the battery contact point **88**, while the lower contactor engages the insulating boss **104**.

When the contactors **72** are rotated clockwise to the second operating position, the lower contactor engages the contact point **102A**, while the upper contactor engages the insulating boss **106**. Thus, the lower contactor establishes a circuit between the contact ring **84** and the contact point **102A** so as to short-circuit the resistor **141**. Accordingly, the motor **12** operates at a speed somewhat greater than its lowest speed.

In the third operating position of the switch, the upper contactor engages the contact point **102J**, so as to short-circuit the resistors **141** and **142**. The lower contactor engages the insulating boss **108**.

In the fourth operating position, the lower contactor **72** engages the contact point **102B**, so as to short-circuit the

resistors **141**, **142** and **143**. The upper contactor engages the semi-perforated boss **110**.

When the switch is moved to its fifth position, the upper contactor engages the contact point **102**K so as to short-circuit all four resistors **141–144**. The lower contactor is between the contact points **102**B and **102**C, but has no effect on the circuit because all of the resistors are already short-circuited. The motor **12** is supplied with full battery voltage so that it operates at high speed.

The contact point **102**L extends the fifth position of the switch, because this contact point is connected to the contact point **102**K. As the upper contactor moves between the contact points **102**K and L, it continues to short-circuit all four resistors **141–144**.

For the sixth through the ninth positions, the contactors **72** are moved counterclockwise, in the opposite direction from the initial position. In the sixth position, the lower contactor engages the contact point **102**D, while the upper contactor engages the semi-perforated insulating boss **112**. The circuit is the same as for the second position.

In the seventh position, the upper contactor **72** engages the contact point **102**G, while the lower contactor engages the insulating boss **114**. The circuit is the same as for the third position.

In the eighth position, the lower contactor engages the contact point **102**E, while the upper contactor engages the boss **116**. The circuit is the same as for the fourth position. Finally, in the ninth position, the upper contactor engages the contact point **102**H, while the lower contactor is between the contact points **102**E and F. The contact point **102**I extends the ninth position to a greater angular interval.

The provision of two contactors and two sets of relatively staggered contacts makes it possible to double the number of active positions of the switch, for the same range of angular movement. The provision of the insulating bosses **106–116** eliminates excessive overlapping between the successive positions, so that the contact points may be arranged with only a minimum spacing therebetween. As each contactor passes between the adjacent contact points, it engages the intermediate insulating boss and is held away from the adjacent contact points so that the bridging action of the contactor is avoided or minimized.

Inasmuch as the switch is capable of providing a large number of closely-spaced operating positions, the switch is extremely well adapted for operation by an automatic control device, such as a servo unit or the like. Typical angular dimensions are indicated in FIG. 1, showing the close spacing between the various positions. It will be seen that the OFF position extends for 16 degrees on either side of the central position, at which the upper contactor of FIG. 7 is centered over the contact point **88**. The second and sixth positions, by which the blower motor is operated at medium low speed, extend for 12 degrees from 16° to 28° on either side of the central position.

The third and seventh positions, at which the blower motor is operated at medium speed, extend for 12 degrees from 27° to 39° on either side of the central position. It will be noted that there is a slight overlapping between the successive positions, so that a new circuit is made by the switch before the previous circuit is broken.

The fourth and eighth positions extend for 16 degrees from 38° to 54° on either side of the central position. These positions represent medium high speed operation of the blower motor. Here again there is slight overlapping between the successive positions.

The fifth and ninth positions, representing high speed operation of the motor, extend for 16 degrees from 49° to 65° on either side of the central position. A further extension of the high positions is normally brought about by the extra contact points **102**I and L.

It will be evident that the illustrated switch provides a multiplicity of operating positions in a relatively small range of movement of the carriage. Moreover, the switch provides the multiplicity of positions in an extremely compact construction. By virtue of the ingenious construction of the switch, the multiplicity of positions are achieved without resorting to a complex or expensive arrangement

Various other modifications, alternative constructions and equivalents may be employed without departing from the true spirit and scope of the invention, as exemplified in the foregoing description and defined in the following claims.

We claim:

1. In an electrical switch,
the combination comprising a housing,
a carriage made of insulating material and rotatable in said housing,
a pair of diametrically opposite contactors mounted on the rear side of said carriage,
said contactors being separate and insulated from each other on said carriage,
a contact supporting plate mounted on said housing to the rear of said contactors,
a contact ring mounted on said plate and engaging said contactors throughout the range of movement thereof,
a pair of groups of contact points mounted on said plate and engageable by said contactors,
one of said contactors being engageable with each of said groups,
each of said contactors having rearwardly projecting inner contact means engaging said contact ring and rearwardly projecting outer contact means for engaging said contact points,
said points of one of said groups being staggered relative to said points of the other group whereby said contactors engage said points in turn to increase the number of operating positions of said switch,
and a plurality of insulating bosses disposed on said plate and interspersed between certain of said contact points for engaging said contactors as said contactors pass between the adjacent points.

2. In an electrical switch,
the combination comprising a housing,
a carriage made of insulating material and rotatable in said housing,
a pair of separate diametrically opposite contactors mounted on the rear side of said carriage,
a contact supporting plate mounted on said housing to the rear of said contactors,
a contact ring mounted on said plate and engaging said contactors throughout the range of movement thereof,
a pair of groups of contact points mounted on said plate and engageable by said contactors,
one of said contactors being engageable with each of said groups,
each of said contactors having inner contact means engaging said contact ring and outer contact means for engaging said contact points,
said points of one of said groups being staggered relative to said points of the other group whereby said contactors engage said points in turn to increase the number of operating positions of said switch,
and a plurality of insulating bosses disposed on said plate and interspersed between certain of said contact points for engaging said contactors as said contactors pass between the adjacent points,
each of said contactors being provided with a pair of rearwardly extending projections for engaging said contact ring and a third rearwardly extending projection for engaging said contact points.

3. In an electrical switch,
the combination comprising a housing,
a carriage made of insulating material and movable in said housing,
a contactor mounted on the rear side of said carriage,
a contact supporting plate mounted on said housing to the rear of said contactor,

a plurality of contacts mounted on said supporting member and engageable by said contactor,

spring means disposed between said carriage and said contactor for biasing said contactor rearwardly,

said contactor having a plurality of locating prongs projecting forwardly therefrom,

said carriage having openings in the rear side thereof for receiving said prongs,

each of said openings in said carriage being tapered in width to enable said contactor to rock relative to said carriage as said contactor is moved over said

contacts, said tapered openings being of increasing width from the rear toward the front of said carriage.

References Cited

UNITED STATES PATENTS

2,937,245	5/1960	Long	200—16
3,183,316	5/1965	Roeser	200—11.24
3,223,794	12/1965	Hoy et al.	200—16

ROBERT K. SCHAEFER, *Primary Examiner.*

J. R. SCOTT, *Assistant Examiner.*