April 27, 1965 R. W. CLOUSER 3,181,151

DOPPLER RADAR ANTENNA SYSTEM

Filed April 22, 1963

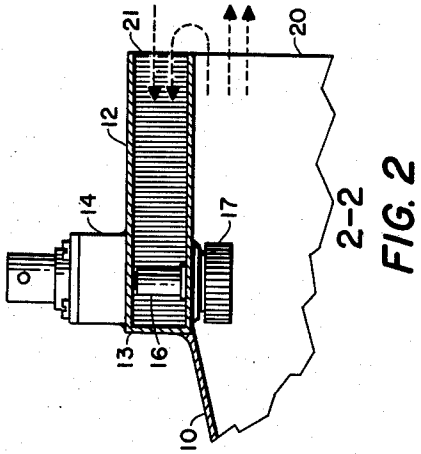

FIG. 2

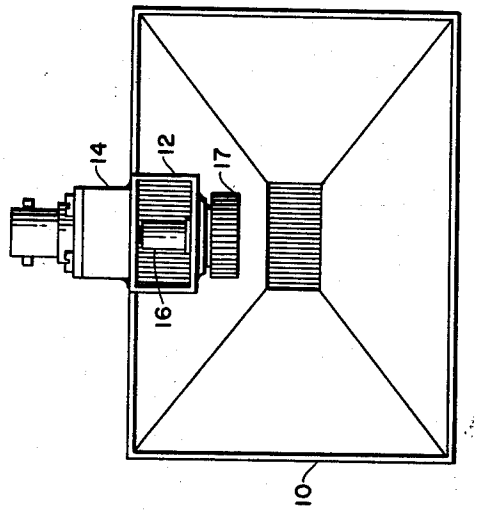

FIG. 4

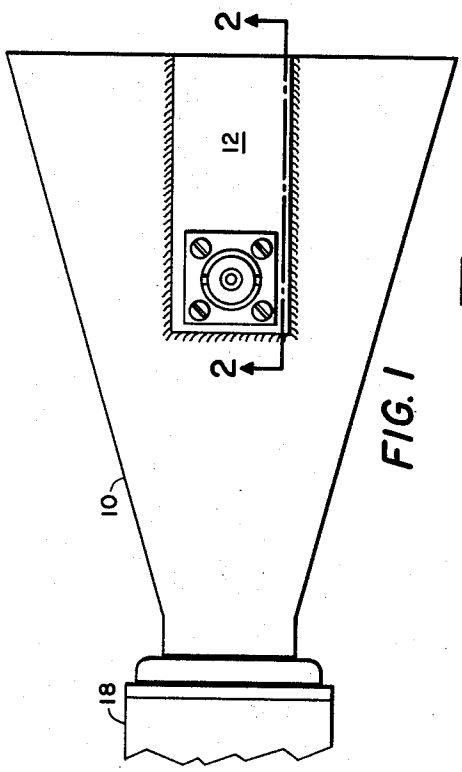

FIG. 1

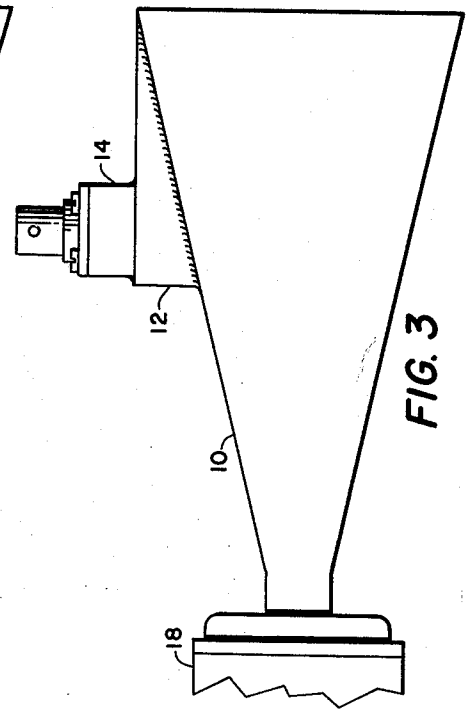

FIG. 3

ROBERT W. CLOUSER
INVENTOR.

BY J. M. St. Amand

ATTORNEY

United States Patent Office 3,181,151 Patented Apr. 27, 1965

3,181,151

DOPPLER RADAR ANTENNA SYSTEM

Robert W. Clouser, 10341 Lehigh Ave., Montclair, Calif.

Filed Apr. 22, 1963, Ser. No. 274,880
6 Claims. (Cl. 343—8)
(Granted under Title 35, U.S. Code (1952), sec. 266)

The invention herein described may be manufactured and used by or for the Government of the United States of America for governmental purposes without the payment of any royalties thereon or therefor.

The present invention relates to radar antenna systems and more particularly to a novel compact radar antenna system in which the transmitting and receiving antennas including the signal mixing system are constructed as a unitary structure.

Existing prior Doppler radar systems require an external directional coupler, a cross-coupling system or an RF circulator as part of the system necessary for processing or mixing of RF energy in target detection; each of these assemblies requires space, and adds cost and weight to the overall system. Further, while it is known to couple adjacent antennas, and while unitary antenna structures are also known to exist, prior to the present invention a unitary structure wherein a receiving antenna is positioned within the transmitting antenna and which included the signal mixing system for coupling the two antennas all within the single unit was not available.

In the present invention the receiving antenna is located inside the transmitting antenna. By this arrangement of elements, coupling exists within the single assembly from the transmitting antenna to the receiving antenna and mixing will take place without the need of any external mixer assemblies.

It is an object of the invention, therefore, to provide a novel compact radar antenna system in which the transmitting and receiving antennas plus the signal mixing system are combined into a unitary structure.

Another object of the invention is to provide a unitary transmitting and receiving radar antenna structure where mixing of the transmitted energy with target reflected energy takes place without the need for any external mixer assemblies.

A further object of the invention is to provide a single radar antenna assembly where the receiver antenna including the signal mixing system is located within the transmitter antenna.

Other objects and many of the attendant advantages of this invention will become readily appreciated as the same becomes better understood by reference to the following detailed description when considered in connection with accompanying drawings wherein:

FIG. 1 is a plan view of an antenna assembly of the present invention;

FIG. 2 is a cross-sectional view taken along line 2—2 of FIG. 1;

FIG. 3 is a side view of the antenna assembly shown in FIG. 1;

FIG. 4 is an end view, looking into the horn, of the antenna assembly shown in FIG. 1.

Referring now to the drawings, like numerals refer to like parts in each of the figures.

Transmitting horn antenna 10 is constructed of metal and is of conventional design. Dimensions of horn 10 will vary in accordance with the radio frequency at which the radar system is to be operated. Receiving antenna 12 is constructed from a short length of waveguide closed at one end 13. The dimensions of receiving antenna 12 are also determined by the operating frequency of the system. The receiving antenna is located, for example,

in one side of transmitting antenna horn 12, as shown in the drawings, such that its open end is within the open end of horn 10. A crystal detector mount 14 of conventional design is located near the closed end 13 of receiving antenna 12. Crystal detector 16 is held in mount 14 by means of cap 17. A radio frequency energy source 18 is provided at the small end of transmitting horn 10; source 18 may be a klystron oscillator or any other suitable generator.

In operation, a portion of the transmitted energy passing out through the open mouth of transmitter horn at 20 enters the open of receiving antenna 12 at 21; reflected energy from the target also enters the open end of the receiving antenna at 21. It is within receiving antenna 12 that crystal detector 16 senses the presence of a target by the process of mixing or combining the portion of transmitted energy that enters open end 21 of receiving antenna 12 with the portion of the energy being returned to the antenna assembly by means of reflection from the target or other object located at some distance in front of the transmitter horn antenna.

By locating the receiver antenna 12 inside the transmitter antenna 10, as shown in the drawings, the mixing of the transmitted energy with target reflected energy takes place within the single antenna assembly and eliminates the need for any external mixer assemblies. The transmitter horn may be constructed as an oval horn instead of rectangular in shape; horns of either configuration will work equally well in this combined antenna assembly.

Obviously many modifications and variations of the present invention are possible in the light of the above teachings. It is therefore to be understood that within the scope of the appended claims the invention may be practiced otherwise than as specifically described.

What is claimed is:

1. In a compact Doppler radar antenna system, a unitary assembly for the transmitting and receiving antennas and signal mixing system comprising:

(*a*) a transmitting horn antenna for transmitting signal energy,

(*b*) a receiving antenna of substantially smaller size than said transmitting antenna located inside said transmitting antenna and adjacent the mouth thereof for receiving a portion of the transmitted energy passing out through the mouth of said transmitting antenna and a portion of energy being returned to the assembly by means of reflection from a target object,

(*c*) a crystal detector mounted within said receiving antenna for sensing the presence of a target by process of mixing said portion of transmitted energy with said portion of reflected energy in absence of any external mixer assembly.

2. In a compact Doppler radar antenna system, a unitary assembly for the transmitting and receiving antennas and signal mixing system comprising:

(*a*) a transmitting horn antenna for transmitting signal energy,

(*b*) a receiving antenna of substantially smaller size than said transmitting antenna located inside said transmitting antenna and adjacent the mouth thereof for receiving a portion of the transmitted energy passing out through the mouth of said transmitting antenna and a portion of energy being returned to the assembly by means of reflection from a target object,

(*c*) said receiving antenna being constructed from a short length of waveguide closed at one end,

(*d*) a crystal detector mounted within said receiving antenna for sensing the presence of a target by proc-

ess of mixing said portion of transmitted energy with said portion of reflected energy in absence of any external mixer assembly.

3. In a compact Doppler radar antenna system, a unitary assembly for the transmitting and receiving antennas and signal mixing system comprising:

(*a*) a transmitting horn antenna for transmitting signal energy,

(*b*) a receiving antenna of substantially smaller size than said transmitting antenna located inside said transmitting antenna and adjacent the mouth thereof for receiving a portion of the transmitted energy passing out through the mouth of said transmitting antenna and a portion of energy being returned to the assembly by means of reflection from a target object,

(*c*) said receiving antenna being constructed from a short length of waveguide closed at one end, the open end of said receiving antenna being in the same plane as the mouth of said transmitting horn antenna,

(*d*) a crystal detector mounted within said receiving antenna for sensing the presence of a target by process of mixing said portion of transmitted energy with said portion of reflected energy in absence of any external mixer assembly.

4. In a compact Doppler radar antenna system, a unitary assembly for the transmitting and receiving antennas and signal mixing system comprising:

(*a*) a transmitting horn antenna for transmitting signal energy,

(*b*) a receiving antenna of substantially smaller size than said transmitting antenna located inside said transmitting antenna and adjacent the mouth thereof for receiving a portion of the transmitted energy passing out through the mouth of said transmitting antenna and a portion of energy being returned to the assembly by means of reflection from a target object,

(*c*) said receiving antenna being constructed from a short length of waveguide closed at one end,

(*d*) a crystal detector mounted within said receiving antenna near the closed end thereof for sensing the presence of a target by process of mixing said portion of transmitted energy with said portion of reflected energy in absence of any external mixer assembly.

5. An antenna system as in claim 4 wherein said transmitting horn is oval.

6. An antenna system as in claim 4 wherein said transmitting horn is rectangular.

References Cited by the Examiner

UNITED STATES PATENTS

2,751,586 6/56 Riblet ---------- 343—16.1

CHESTER L. JUSTUS, *Primary Examiner.*

R. D. BENNETT, *Examiner.*