June 3, 1941. R. N. CARSON ET AL 2,244,445

HAND PROTECTOR

Filed Nov. 20, 1937

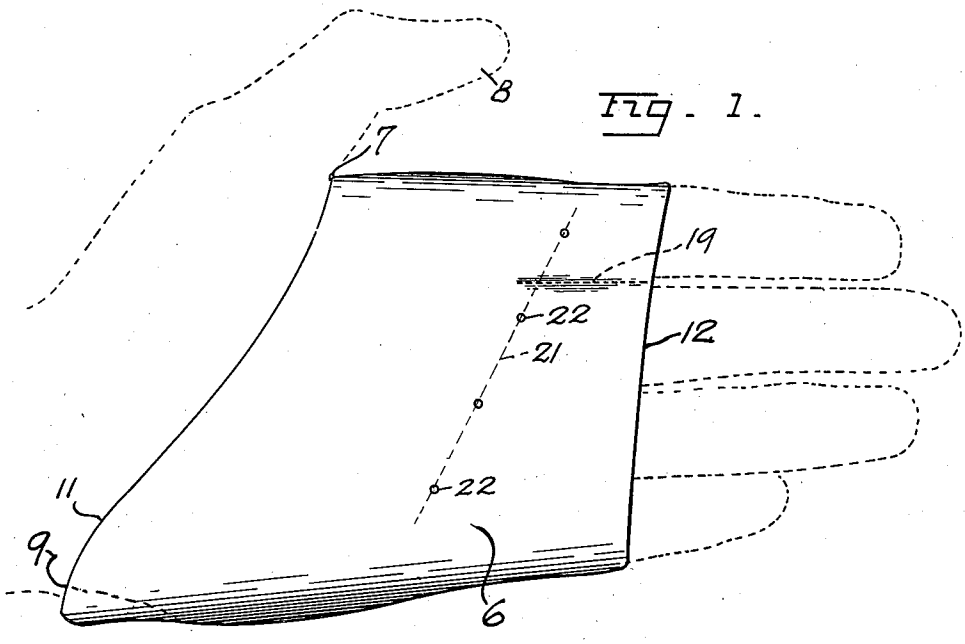

Fig. 1.

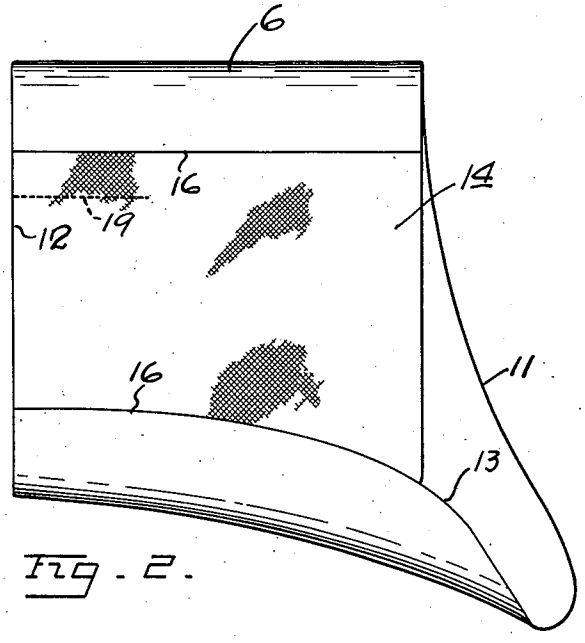

Fig. 2.

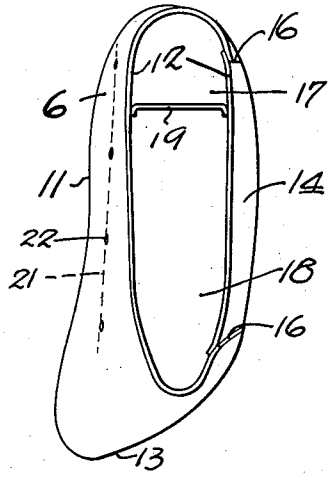

Fig. 3.

INVENTOR.
ROBERT N. CARSON
THOMAS CARSON O'CONNELL

BY George B. White

ATTORNEY

Patented June 3, 1941

2,244,445

UNITED STATES PATENT OFFICE

2,244,445

HAND PROTECTOR

Robert N. Carson, Ross, and Thomas Carson O'Connell, San Rafael, Calif.

Application November 20, 1937, Serial No. 175,684

1 Claim. (Cl. 2—20)

This invention relates to a hand protector.

The primary object of this invention is to provide a hand protector which snugly fits the grip of the hand, and which is adapted to accommodate the expansion and contraction of the hand or fist respectively when in gripping and relaxed attitudes.

Another object of the invention is to provide a hand protector for the hand so formed as to snugly fit the hand in all attitudes without any interference with or obstruction of the grip on the palm or fingers, said hand protector or glove being so formed as to assume a predetermined position on the hand by reason of its contour.

Another object of this invention is to provide a hand protector which is highly useful and simple in construction. Convenience of arrangement, lightness and comparative inexpense of manufacture are further objects which have been borne in mind in the production and development of the invention.

We are aware that some changes may be made in the general arrangements and combinations of the several devices and parts, as well as in the details of the construction thereof without departing from the scope of the present invention as set forth in the following specification, and as defined in the following claim; hence we do not limit our invention to the exact arrangements and combinations of the said device and parts as described in the said specification, nor do we confine ourselves to the exact details of the construction of the said parts as illustrated in the accompanying drawing.

With the foregoing and other objects in view, which will be made manifest in the following detailed description and specifically pointed out in the appended claim, reference is had to the accompanying drawing for the illustrative embodiment of the invention, wherein:

Fig. 1 is a front view of the hand protector, a hand being indicated by broken lines.

Fig. 2 is a back view of the hand protector.

Fig. 3 is an end view of the hand protector.

In carrying out our invention we make use of a hollow flexible trunk or body 6, the palm portion of which when in place extends from the crotch 7 of the thumb 8 substantially diagonally across the palm toward and over the outside of the heel 9 of the hand at the edge 11 nearer the wrist, and over at least the first joints of the fingers at the other end or edge 12. The former edge 11 therefore is clear of the ball of the hand. The back portion of the protector extends substantially across the back of the hand except that a corner portion 13 curves over the top of the heel of the hand. It is to be noted that there are no seams on the palm or gripping portion of the hand protector but only at the top or back where such seams do not interfere with the grip. It is to be also noted that the position of the glove is definitely fixed between the base of the thumb and the heel of the hand.

While the entire trunk may be made of suitable elastic material yet in the preferred embodiment herein shown only a back insert 14 is made of elastic material, the remaining portion of the trunk 6 is made of usual flexible glove material, such as leather. The insert 14 is secured in place by suitable longitudinal seams 16 both well over the back of the hand.

The entire unit heretofore described is hollow and open at both ends so that it may be easily pulled over a hand. The end or edge 12 at the fingers is divided into two openings or loops 17 and 18 by connecting the back and front of the protector together. It is preferable that the forefinger and middle finger be separated by such connection located in the crotch between said fingers. In this illustration the connection between the fingers is established without forming any fingers on the glove and without any seams on the palm. Namely a spacer 19, preferably of soft flexible leather, is stitched in place so as to extend between the forefinger and the middle finger. The spacer 19 extends from the top of the glove to the crotch of the forefinger and second finger and serves the double purpose of establishing constant position of the top edge 12 of the leather and also of keeping the edge 12 from rolling back on the palm of the hand at the most important point of the grip, where the club rides over the forefinger. The spacer 19, when located between the forefinger and the middle finger also has the advantage of allowing the forefinger to be raised higher than the other three fingers after the hand grips the club.

The various novel features of this protector may be used in various types of hand protectors, but the form herein described is particularly adapted for use as a golf glove or the like. A diagonal marking line 21 extends over the palm from near the base of the index finger toward the heel of the hand to locate the position of a golf club on the palm for a correct grip. This line may be burned or otherwise permanently fixed on the palm of the protector. For instance in this illustration the line 21 is formed by a series of perforations 22 through the palm portion of the hand.

What we claim is:

A golf glove comprising, a palm portion extending at its transverse edge nearer to the wrist from the crotch of the thumb substantially diagonally across the palm toward and over the outside of the heel of the hand, the other transverse edge thereof loosely fitting across the front of the base of the fingers, an elastic back portion secured to the longitudinal edges of the palm portion at the back of the hand, and a partition element extended between said portions adjacent the edge nearer to the fingers.

ROBERT N. CARSON.
THOMAS CARSON O'CONNELL.