(No Model.) 12 Sheets—Sheet 1.

C. HILL.

THREAD WINDING MACHINE.

No. 482,308. Patented Sept. 6, 1892.

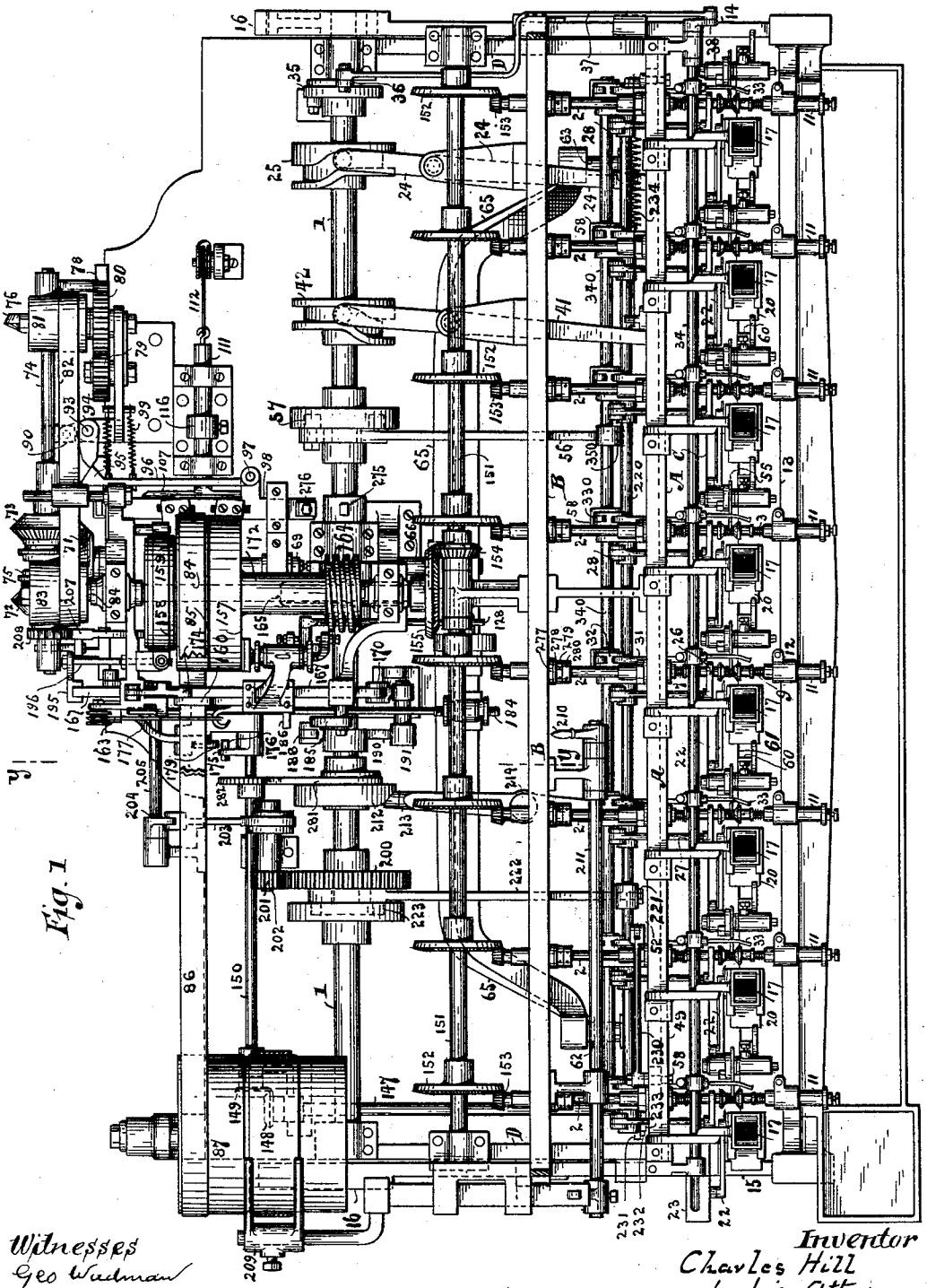

Fig. 1.

Witnesses
Geo Wadman
Fred'k Kempsell.

Inventor
Charles Hill
by his Attys
Gifford & Lawo.

THE NORRIS PETERS CO., PHOTO-LITHO., WASHINGTON, D. C.

(No Model.) 12 Sheets—Sheet 2.

C. HILL.

THREAD WINDING MACHINE.

No. 482,308. Patented Sept. 6, 1892.

Fig. 2

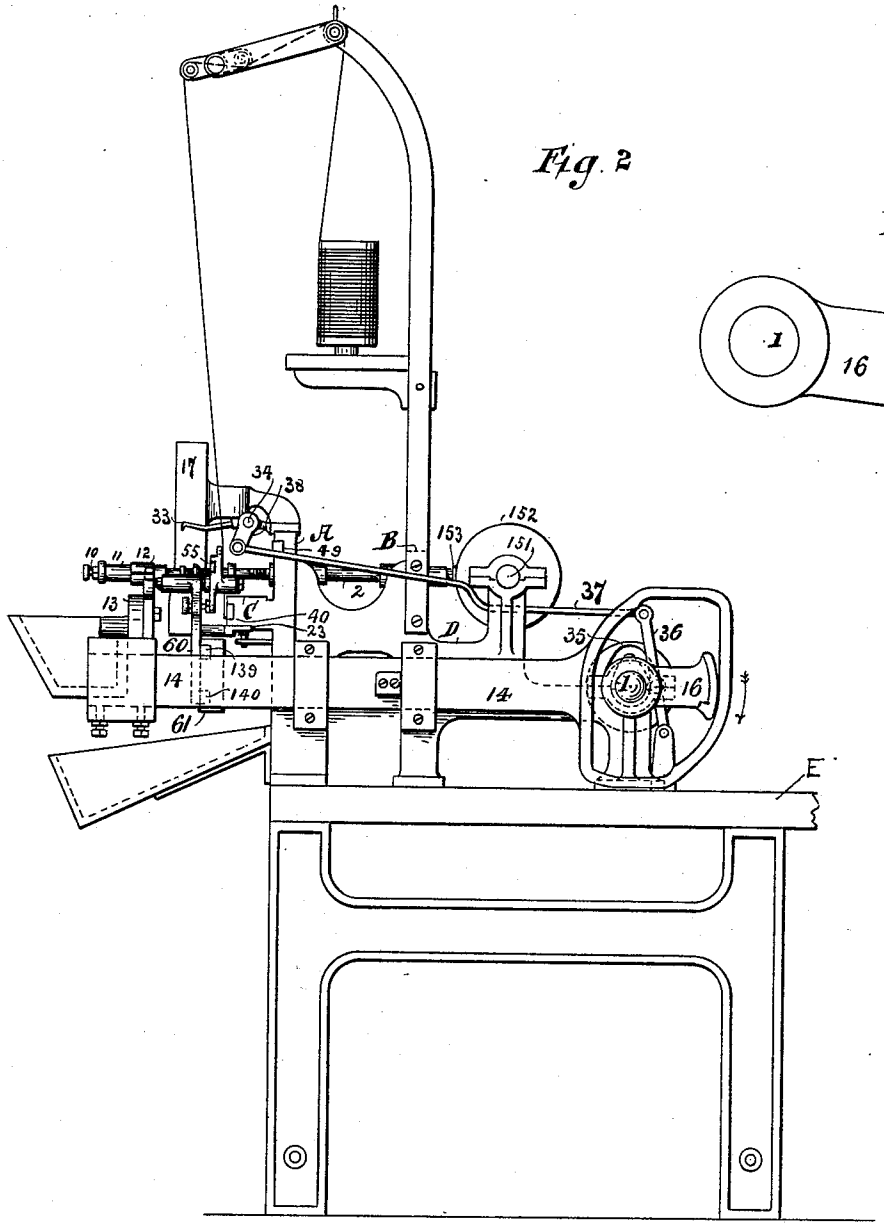

Fig. 2a

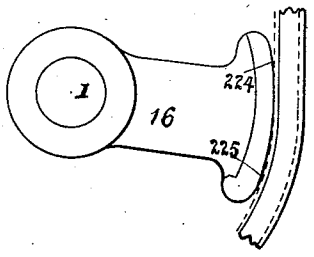

Witnesses.
Geo. Wadman
Fred'k Kemper.

Inventor
Charles Hill
by his Attys
Gifford & Low.

THE NORRIS PETERS CO., PHOTO-LITHO., WASHINGTON, D. C.

(No Model.) 12 Sheets—Sheet 3

C. HILL.

THREAD WINDING MACHINE.

No. 482,308. Patented Sept. 6, 1892.

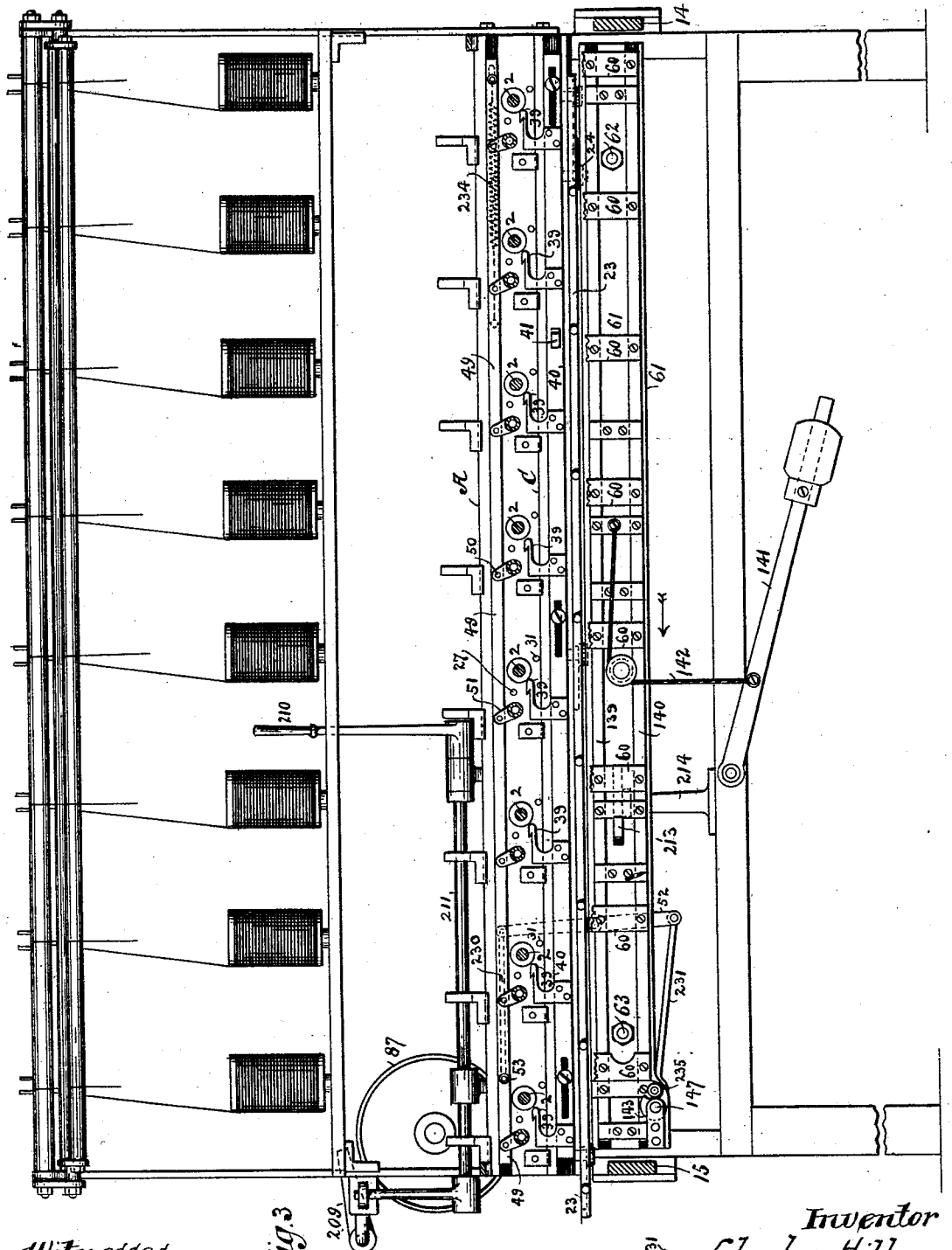

Fig. 3

Fig. 4

Witnesses
Geo Wadman
Fred S Kemper

Inventor
Charles Hill
by his Attys
Gifford & Law

THE NORRIS PETERS CO., PHOTO-LITHO., WASHINGTON, D. C.

(No Model.) 12 Sheets—Sheet 4.

C. HILL.

THREAD WINDING MACHINE.

No. 482,308. Patented Sept. 6, 1892.

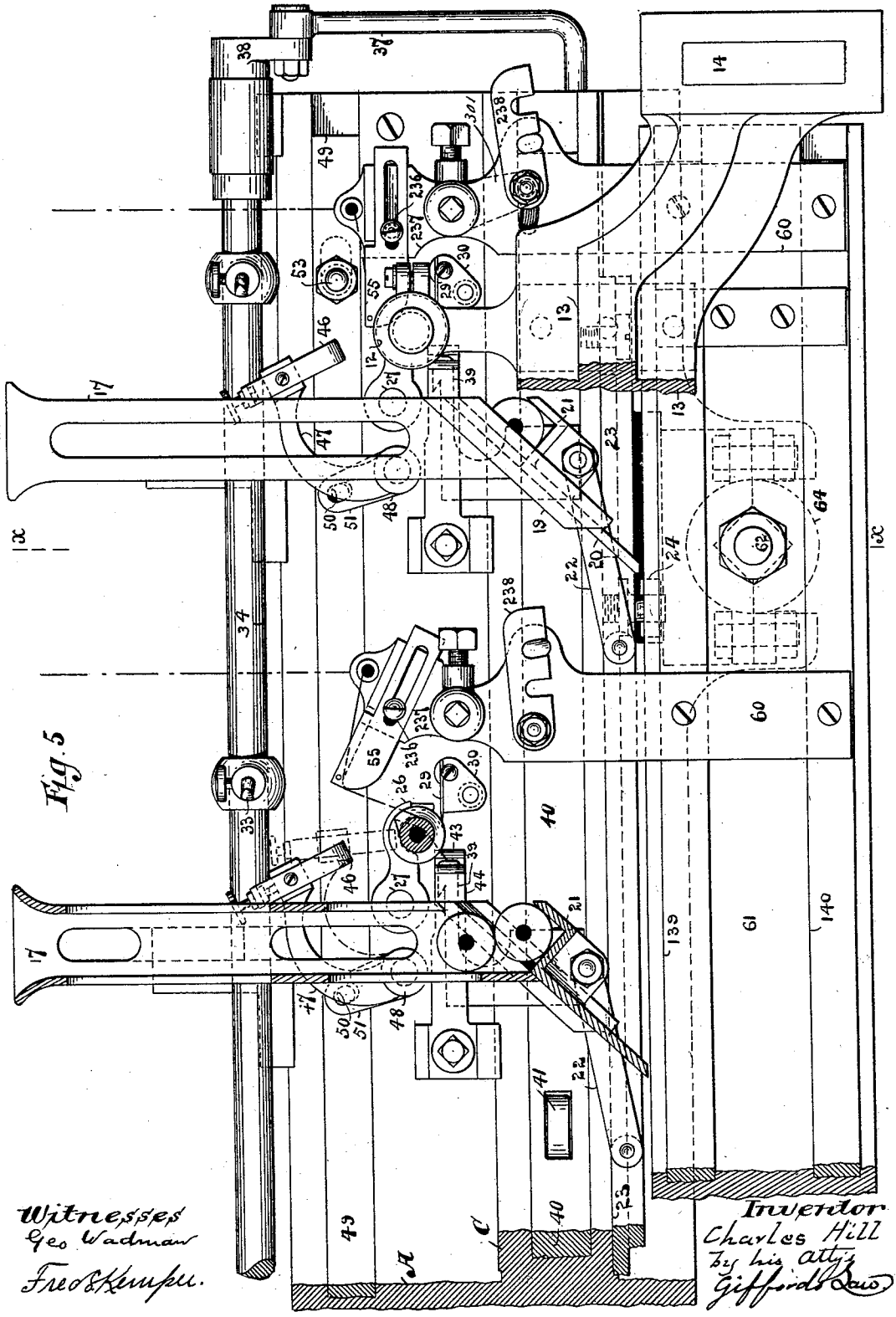

Fig. 5

THE NORRIS PETERS CO., PHOTO-LITHO., WASHINGTON, D. C.

(No Model.) 12 Sheets—Sheet 5.

C. HILL.

THREAD WINDING MACHINE.

No. 482,308. Patented Sept. 6, 1892.

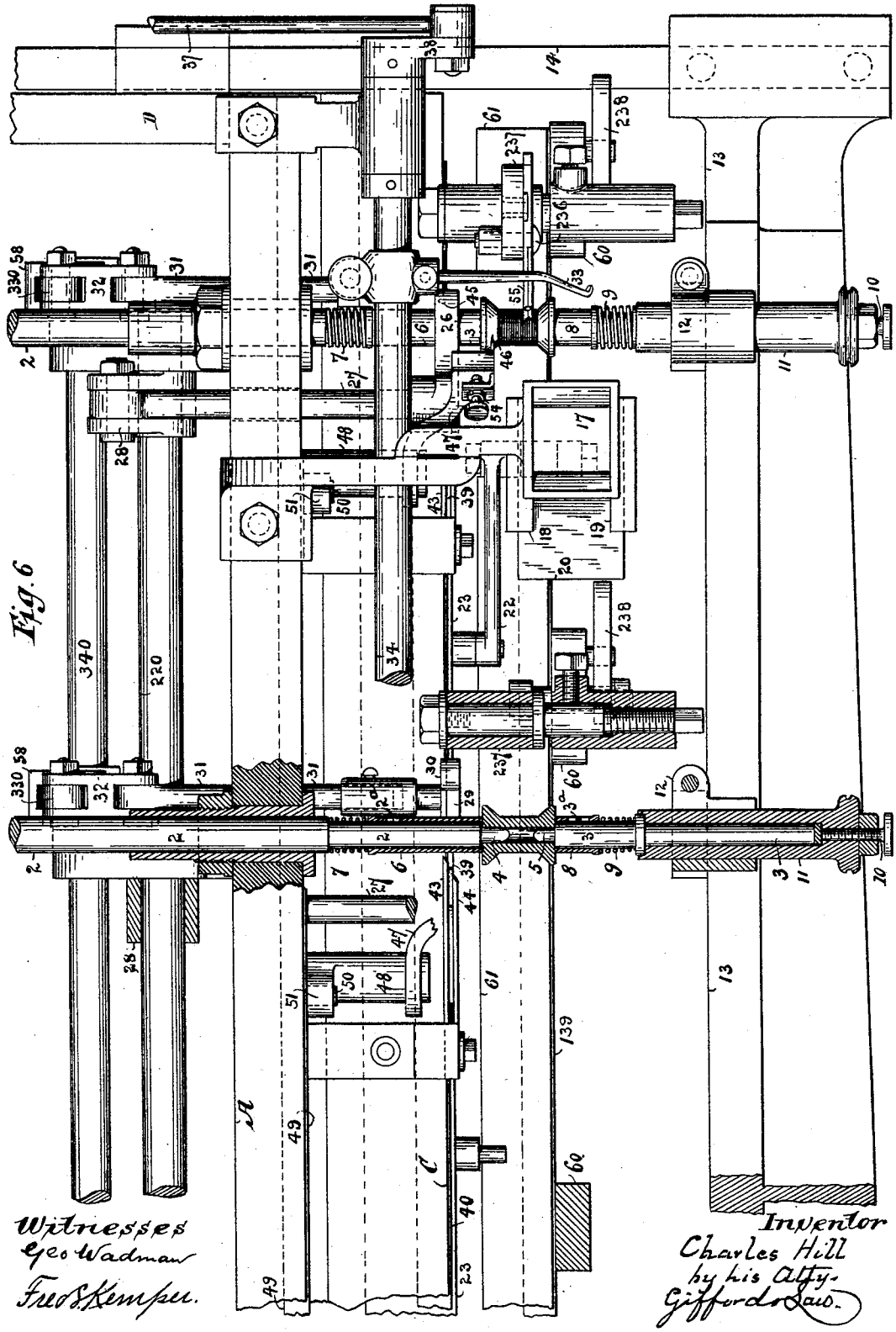

Fig. 6

Witnesses
Geo. Wadman
Fred. Kemper.

Inventor
Charles Hill
by his Atty.
Gifford & Lawo.

THE NORRIS PETERS CO., PHOTO-LITHO., WASHINGTON, D. C.

(No Model.) 12 Sheets—Sheet 6.

C. HILL.

THREAD WINDING MACHINE.

No. 482,308. Patented Sept. 6, 1892.

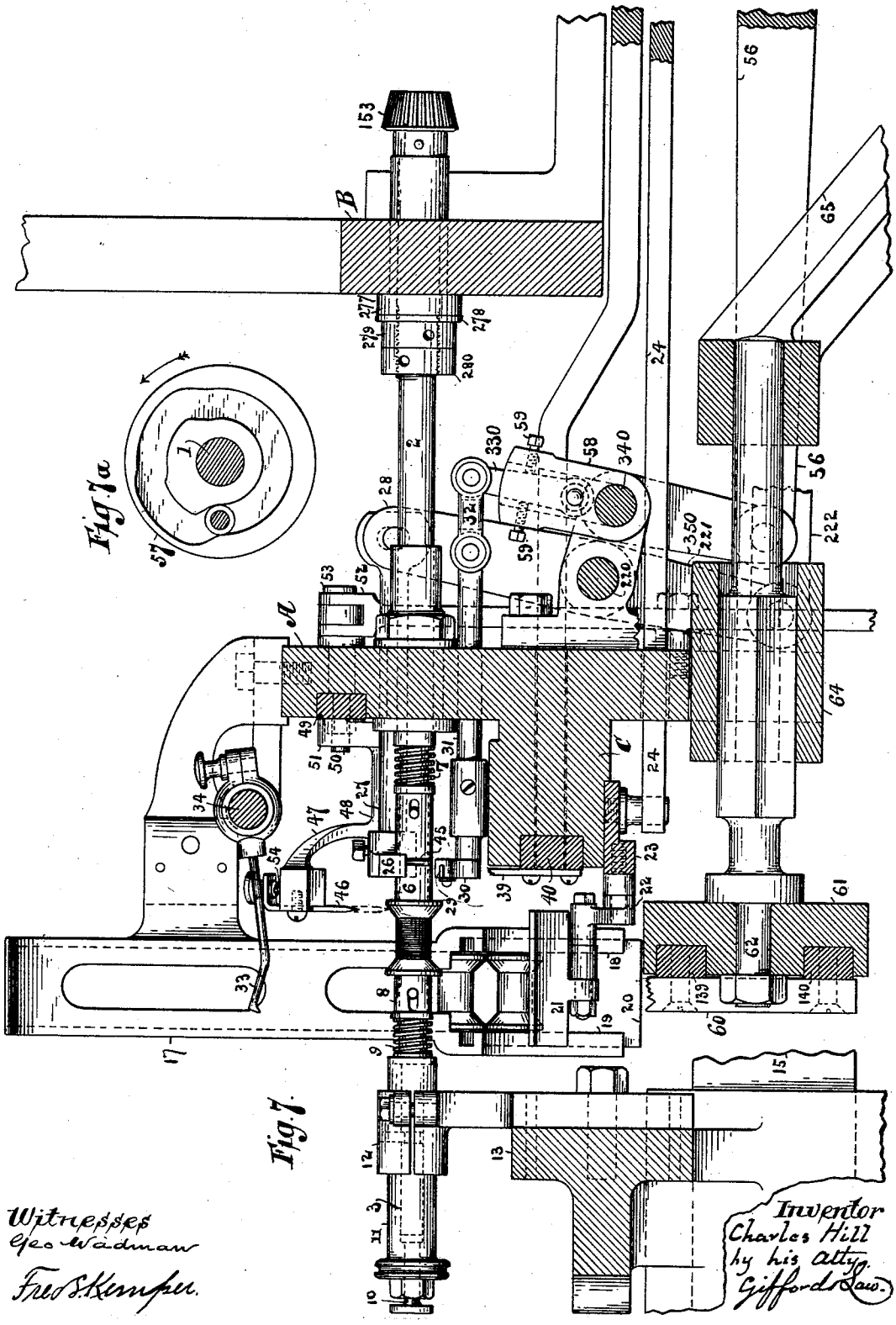

THE NORRIS PETERS CO., PHOTO-LITHO., WASHINGTON, D. C.

(No Model.) 12 Sheets—Sheet 7.

C. HILL.

THREAD WINDING MACHINE.

No. 482,308. Patented Sept. 6, 1892.

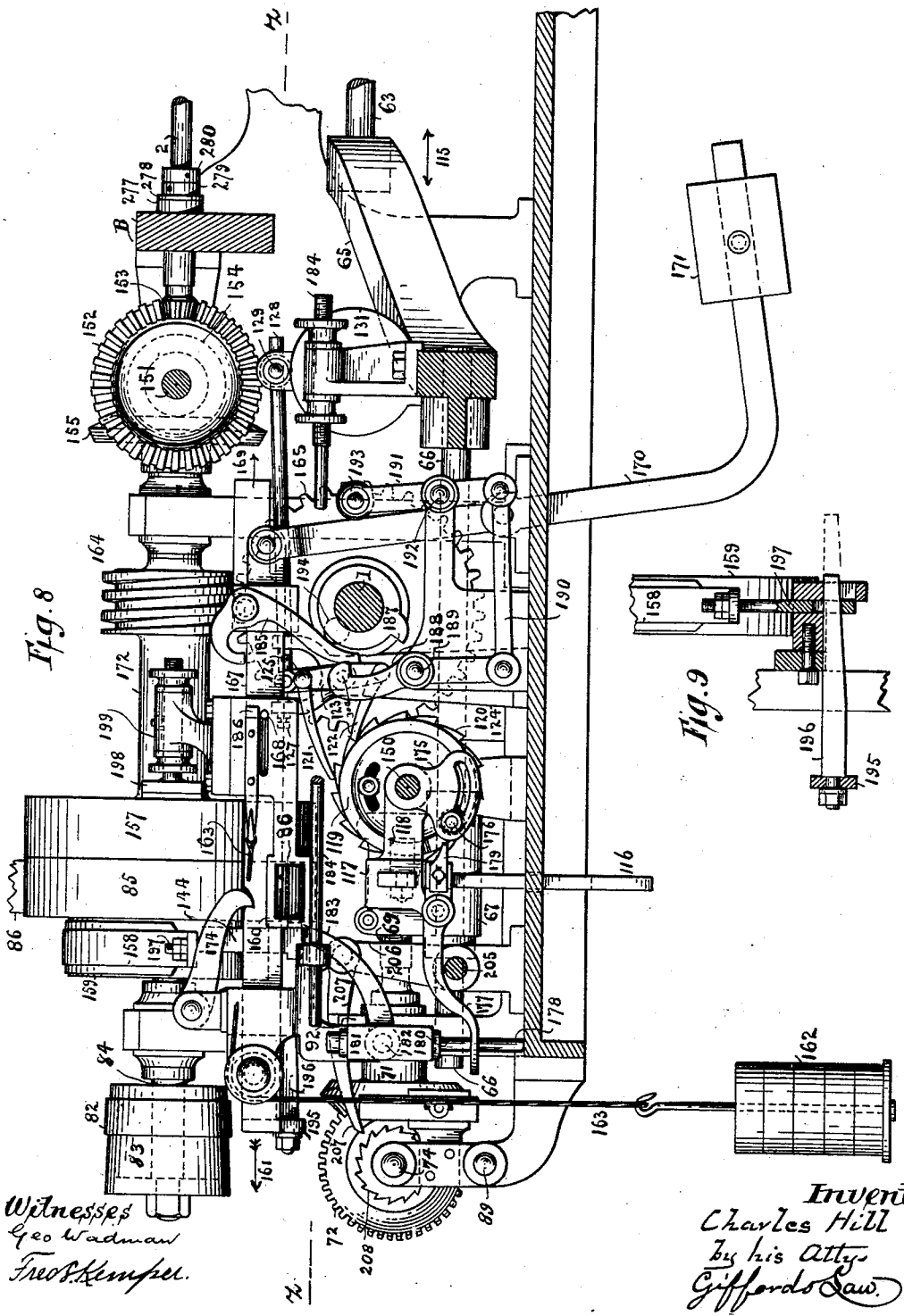

Fig. 8

Fig. 9

Witnesses
Geo Wadman
Fred. Kemper.

Inventor
Charles Hill
by his Attys
Gifford & Law.

THE NORRIS PETERS CO., PHOTO-LITHO., WASHINGTON, D. C.

(No Model.) 12 Sheets—Sheet 8.

C. HILL.

THREAD WINDING MACHINE.

No. 482,308. Patented Sept. 6, 1892.

Fig. 10

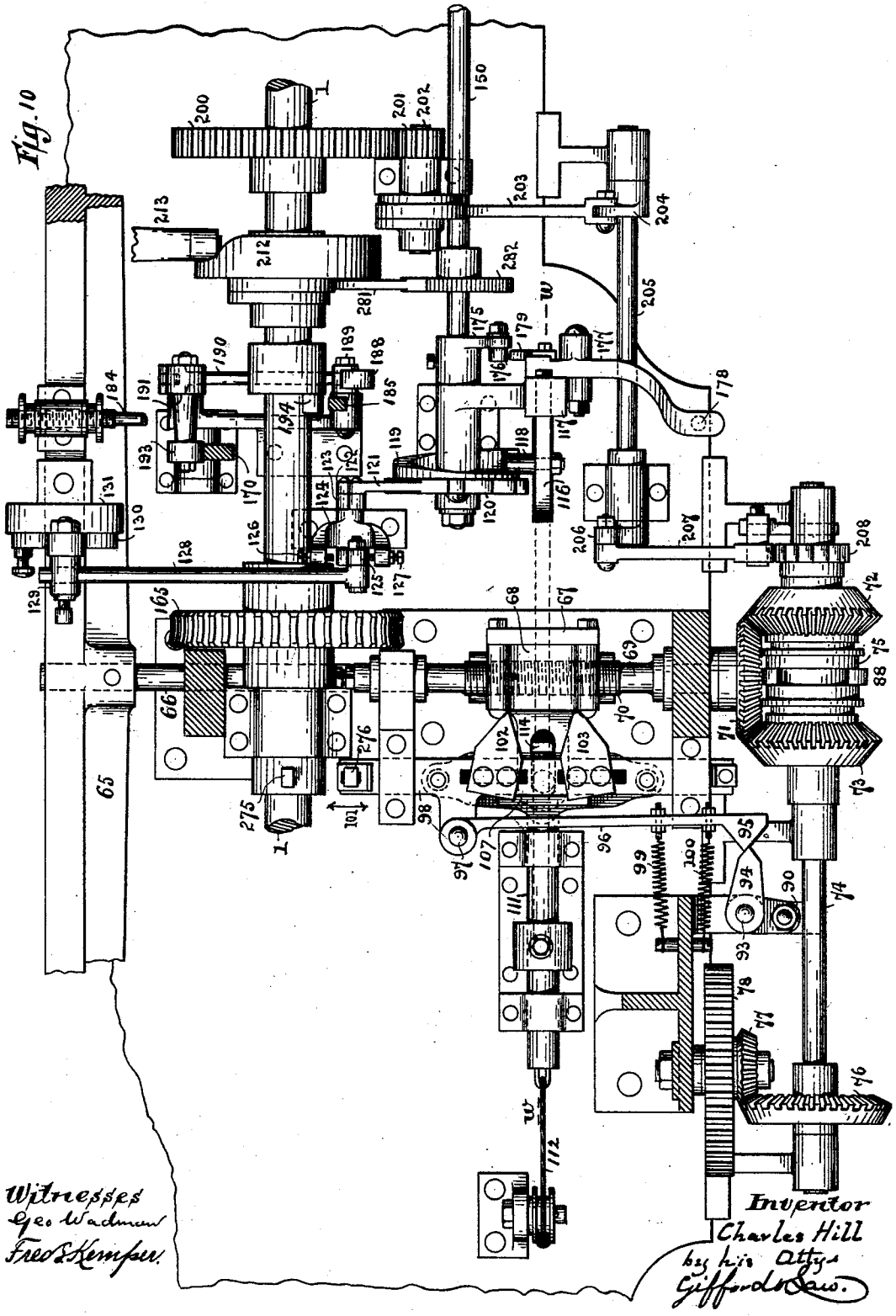

Witnesses
Geo. Wadman
Fred'k Kempster.

Inventor
Charles Hill
by his Attys
Gifford & Law.

THE NORRIS PETERS CO., PHOTO-LITH'O., WASHINGTON, D. C.

(No Model.) 12 Sheets—Sheet 9.

C. HILL.

THREAD WINDING MACHINE.

No. 482,308. Patented Sept. 6, 1892.

Fig. 11

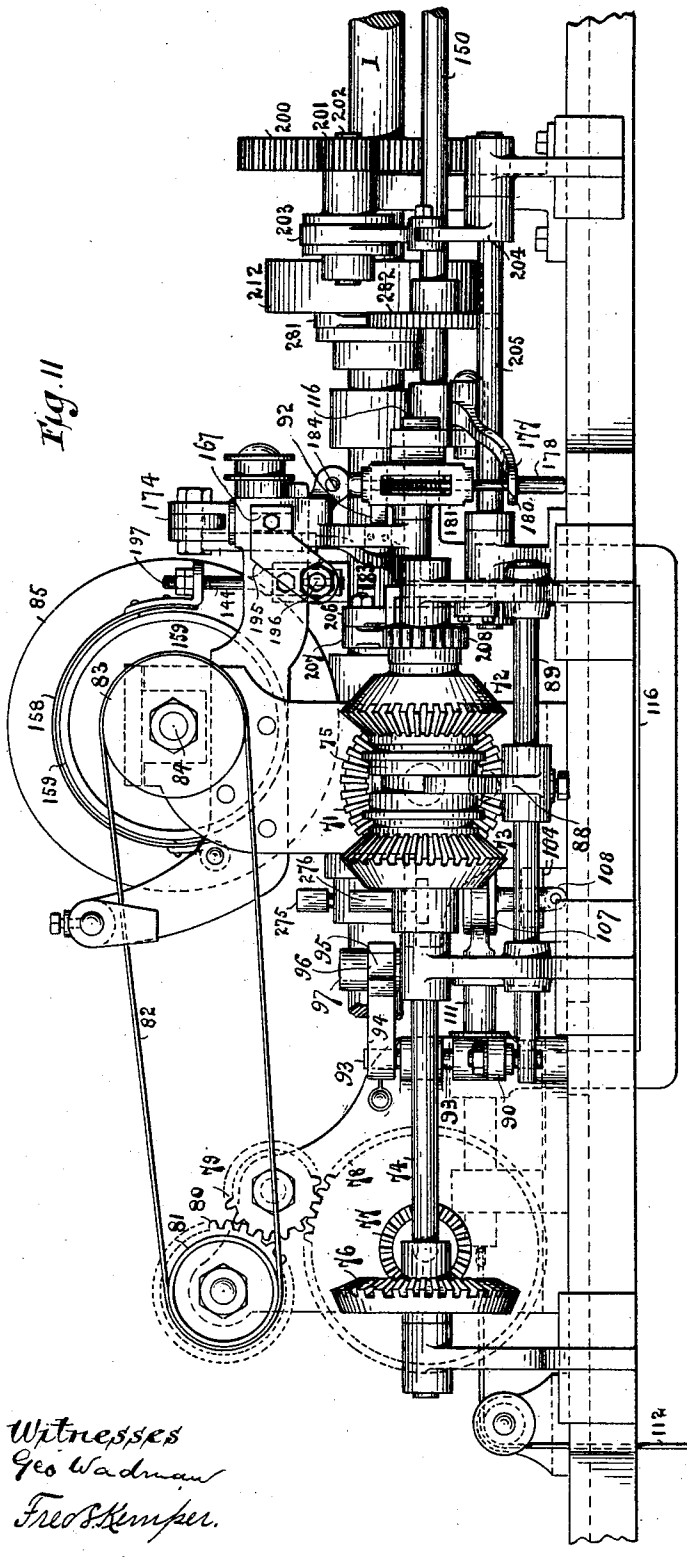

Fig. 12

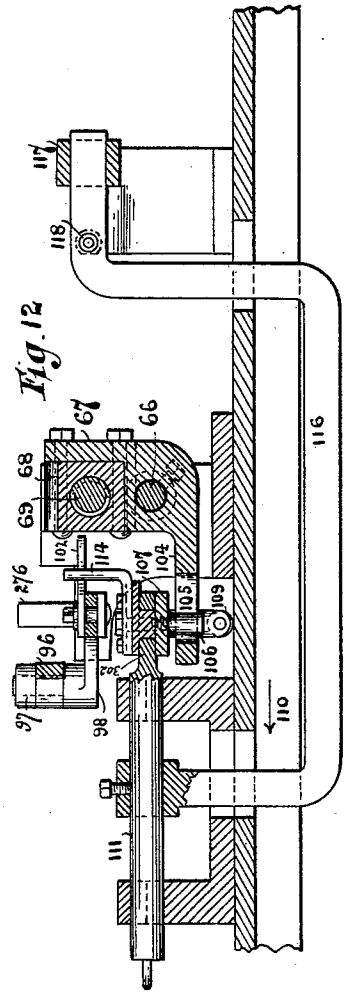

Witnesses
Geo Wadman
Fred S. Kemper.

Inventor
Charles Hill
by his Atty.
Gifford & Law.

THE NORRIS PETERS CO., PHOTO-LITHO., WASHINGTON, D. C.

(No Model.) 12 Sheets—Sheet 10.

C. HILL.

THREAD WINDING MACHINE.

No. 482,308. Patented Sept. 6, 1892.

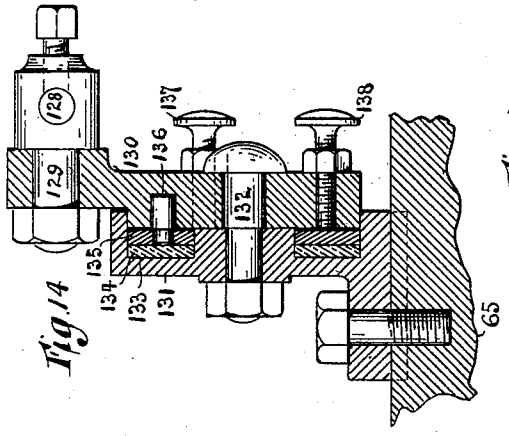

Fig. 14

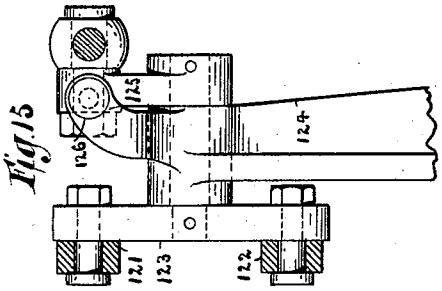

Fig. 15

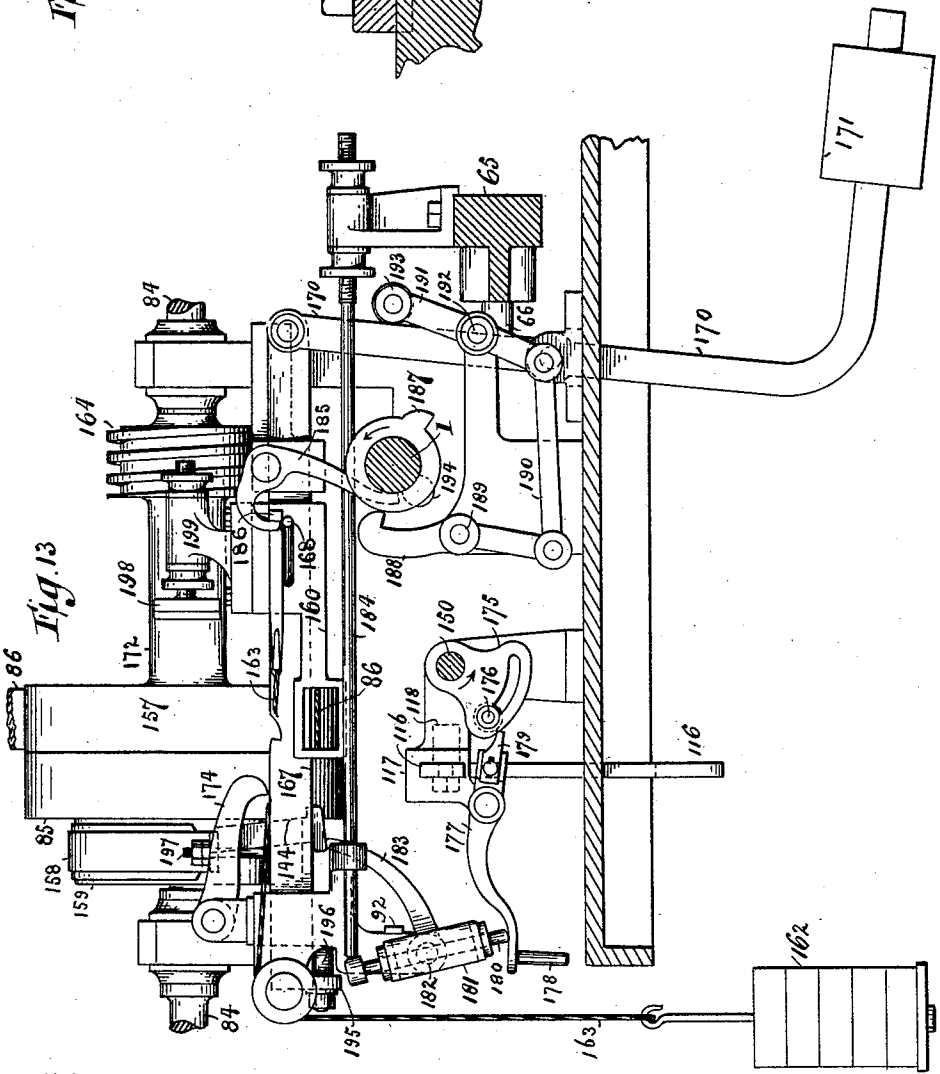

Fig. 13

Witnesses
Geo Wadman
Fred S. Kemper.

Inventor
Charles Hill
by his Attys
Gifford & Law.

THE NORRIS PETERS CO., PHOTO-LITHO., WASHINGTON, D. C.

(No Model.) 12 Sheets—Sheet 11.

C. HILL.

THREAD WINDING MACHINE.

No. 482,308. Patented Sept. 6, 1892.

Fig. 16

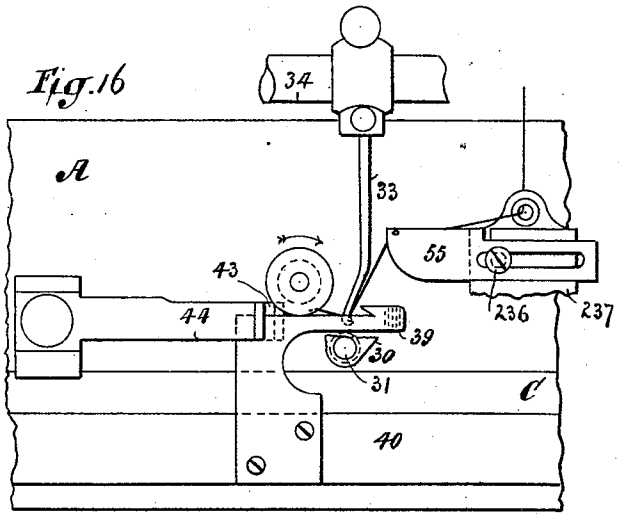

Fig. 17

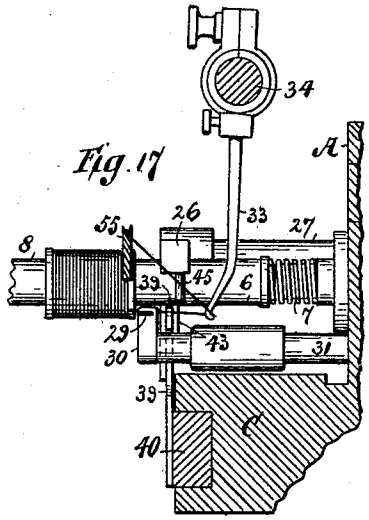

Fig. 18

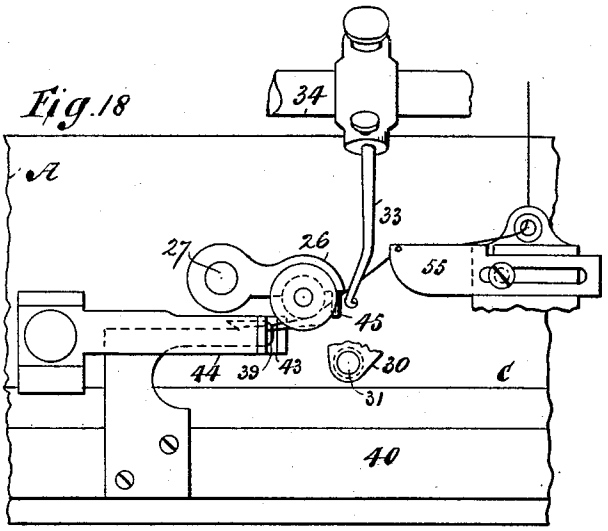

Fig. 19

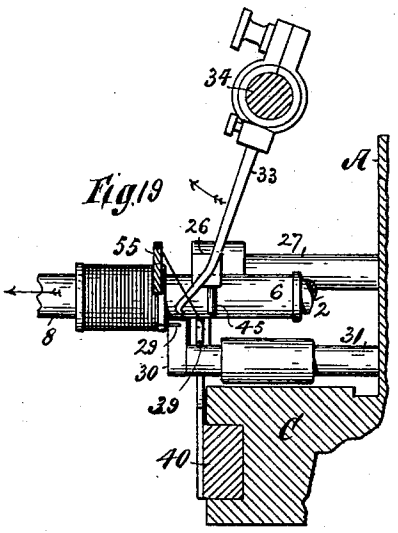

Fig. 22

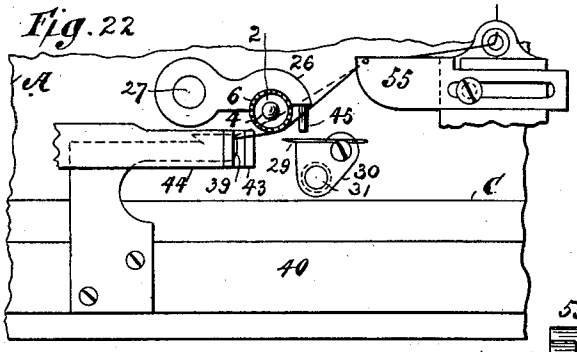

Fig. 20

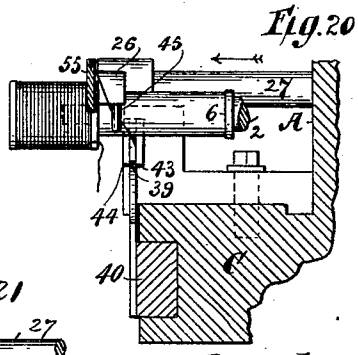

Fig. 21

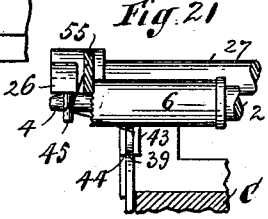

Witnesses
Geo Wadman
Fred S. Kemper.

Inventor
Charles Hill
by his Attys
Gifford & Law.

THE NORRIS PETERS CO., PHOTO-LITHO., WASHINGTON, D. C.

(No Model.) 12 Sheets—Sheet 12.

C. HILL.

THREAD WINDING MACHINE.

No. 482,308. Patented Sept. 6, 1892.

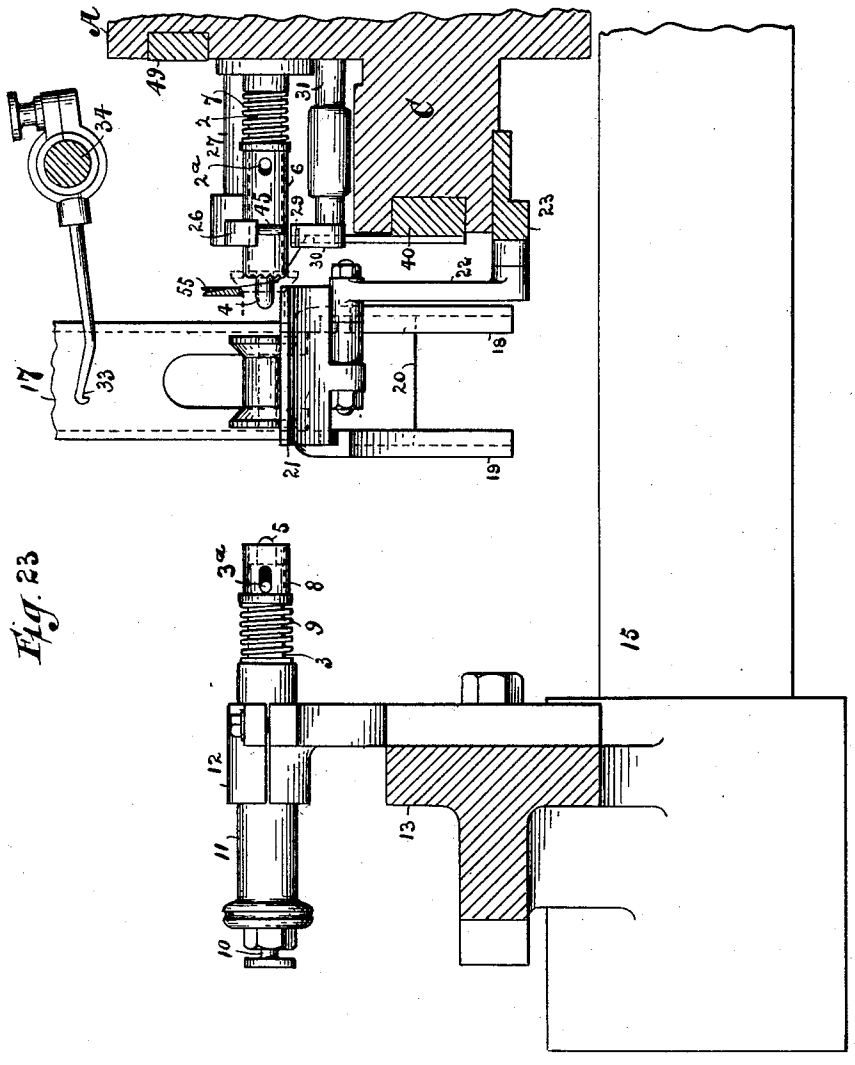

Fig. 23

Witnesses
Geo Wadmun
Fred Kemper

Inventor
Charles Hill
by his attys
Gifford & Law.

THE NORRIS PETERS CO., PHOTO-LITHO., WASHINGTON, D. C.

UNITED STATES PATENT OFFICE.

CHARLES HILL, OF NEWARK, NEW JERSEY, ASSIGNOR, BY DIRECT AND MESNE ASSIGNMENTS, TO THOMAS RUSSELL, OF MONTCLAIR, NEW JERSEY, AND ROBERT W. FERGUSON, OF NEW YORK, N. Y., TRUSTEES.

THREAD-WINDING MACHINE.

SPECIFICATION forming part of Letters Patent No. 482,308, dated September 6, 1892.

Application filed October 2, 1891. Serial No. 407,533. (No model.)

To all whom it may concern:

Be it known that I, CHARLES HILL, of Newark, New Jersey, have invented a new and useful Improvement in Thread-Winding Machines, of which the following is a specification.

The machine which embodies this invention is intended for automatically winding thread upon spools, and it performs the following operations upon each one of a series of spools:

(*a*) The spool is transferred from a hopper to a spindle, which spindle at this time is not rotating. The mechanism which performs this operation I shall call the "spool-mounting mechanism."

(*b*) The spool is wound with thread, layer upon layer, each succeeding layer being longer than the preceding one to fill up to the diverging spool-heads. The mechanism which performs this operation I shall call the "thread-winding mechanism."

(*c*) The loose end, known as the "scrap end," which is left projecting when the winding commences, is cut off. The mechanism which performs this function I call the "scrap-end-cutting mechanism."

(*d*) When the spool is filled, the winding stops automatically and remains stopped until another spool is mounted ready to be wound, when it is automatically started. The mechanism which performs this operation I call the "stopping and starting motion."

(*e*) The spool-head is slit. The mechanism which performs this operation I call the "spool-slitting mechanism."

(*f*) The thread is drawn into the slit. The mechanism which performs this operation I call the "thread-securing mechanism."

(*g*) The thread is cut outside the slit and the end thereof connecting with the bobbin is held to be in readiness for the commencement of the next spool. The mechanism which performs this operation I call the "thread cutting and holding mechanism."

(*h*) The completed spool is dropped from the spindle. The mechanism which performs this operation I call the "spool-dismounting mechanism."

(*i*) Intermediate the winding operations the thread-guide is moved from the end of the longest traverse, where it must stop, to the end of the shortest traverse, where it must start on a new spool. The mechanism which performs this operation I call the "start-fixing mechanism."

Although in this specification and its claims I shall for convenience designate the various mechanisms as above mentioned or by other comprehensive expressions, I do not in the use of these expressions wish to be understood as limiting myself to the exact mechanism, either in number, arrangement, or form of parts, which I shall set forth in more particularly describing the machine.

The best form of machine in which I have thus far embodied my invention is set forth in the following description and the accompanying drawings, in which—

Figure 1 is a plan or top view of the machine. Fig. 2 is a side elevation of a portion. Fig. 2^a is a detail of a cam 16. Fig. 3 is a sectional front elevation showing certain parts. Fig. 4 is a detail showing a certain cam. Fig. 5 is a front elevation, partly in section and on an enlarged scale, illustrating the thread-winding portion of the invention. Fig. 6 is a plan, partly in section, of the parts shown in Fig. 5. Fig. 7 is a transverse vertical section of the parts shown in Fig. 5, the section being taken on the line *x x*, Fig. 5. Fig. 7^a is a detail of cam 37. Fig. 8 is an enlarged transverse vertical section taken on the line *y y*, Fig. 1. Fig. 9 is a detail showing a transverse section of a certain brake device. Fig. 10 is a sectional plan of the parts shown in Fig. 8, the section being taken on the line *z z*. Fig. 11 is a rear elevating of the parts shown in Figs. 8 and 10. Fig. 12 is a rear sectional elevation taken on the line *w w*, Fig. 10, and showing certain parts. Fig. 13 is a view corresponding to Fig. 8 and showing certain belt-shipping mechanism in a position different from that shown in Fig. 8. Fig. 14 is a transverse vertical section of a friction-clutch. Fig. 15 is a front elevation of a device for supporting and regulating certain parts. Figs. 16 to 22, inclusive, are diagrams illustrating successive steps in treating the thread after the winding of the spool has been completed and the spin-

dles on which they are mounted and secured have stopped rotating. Figs. 16 and 17 show the relative positions of the finger-hook, thread-guide, and grip-hook at their extreme throw, having moved simultaneously, also showing the slitting-knife after having cut a slit in the spool-flange and receded slightly therefrom. Figs. 18 and 19 show the relative positions of the above parts when the grip-hook has reached its original position and has cut the thread from the spool against a front chisel-edge resilient bar and has also gripped the thread from the thread-guide against a rear bar. Fig. 20 is a side view of the ejector in a position about to force the spool off the rear spindle, the front spindle having been removed. Fig. 21 is a side view corresponding to that in Fig. 20 and shows the ejector in its forward position, having freed the spool from off the spindle and also conveyed, by means of its pin attachment, the thread extended between the hook-grip and the thread-guide to a position to be caught on the shoulder of the spindle. Fig. 22 is a front view of the parts shown in Figs. 20 and 21 and showing by a full line the position of the thread corresponding to that shown in Fig. 20 and by a dotted line the position of the thread corresponding to that shown in Fig. 21. Fig. 23 is a transverse vertical section of the parts in their relative positions for receiving a fresh spool.

The main frame consists of two upright parallel plates or bars A and B. From A projects forward below the spindle-bearings a part C, which carries the slides for many of the parts. From B projects rearwardly a part D, which carries the cam-shaft 1 and a spindle-turning shaft 151. The parts A, B, C, and D are all secured to a bed-plate E, to which is also secured the mounting of the transverse changing and other mechanism, hereinafter described. This bed-plate E is continuous, and thus unites the bearings of all the mechanisms with absolute firmness. The front edge of the bed-plate E terminates in the same vertical plane with the front of the part A, so that while the bed-plate underlies and supports those parts of the machine lying to the rear of the spindles the spindles overhang the space in front of the bed-plate, and the bed-plate thus forms no obstruction to dropping spools when completed.

The spool mounting and dismounting mechanism.—2 is a positively-revolved spindle. 3 is a spindle in alignment therewith free to revolve. Projections 4 and 5 are provided on the ends of the spindles adapted to enter the spool-hole at opposite ends, as shown in Fig. 6. A sleeve or spool-head abutment 6 surrounds the spindle 2 and is pressed toward the extremity of the spiudle by the spring 7. A sleeve or spool-head abutment 8 surrounds the spindle 3 and is pressed toward the extremity of the same by the spring 9. Pins 2^a and 3^a project from the spindles 2 and 3, respectively, into slots in the sleeves, limiting the extent to which the sleeves may move, the movement of sleeve 6 being much more limited than the sleeve 8, as indicated by the lengths of slots shown. The end of the sleeve 6 is serrated, as shown in Fig. 23. The set-screw 10 forms a back center bearing for the spindle 3 and may be employed, also, to take up wear. The longitudinal adjustment of the spindle 3 is capacitated by the clamp 12, as is also its removal. It is necessary for mounting and dismounting the spool that one of the spindles 2 or 3 should be movable longitudinally to and from the other, and to this end I mount the bearing or holder 11 of the spindle 3 in the clamp 12 upon a bar 13, extending from end to end of the machine, as shown in Fig. 1, and carrying all of the spindles 3. This bar 13 is mounted upon the bars 14 and 15 at opposite ends of the machine, and the latter bars are guided longitudinally in a horizontal plane by suitable guideways upon the main frame of the machine. Motion is communicated to the bars 14 and 15 by cams 16, mounted upon opposite ends of the shaft 1, which are timed to move the spindles 3 to and from the spindle 2 at the proper instances. The spools to supply each pair of spindles are held in a hopper 17, extending vertically at one side of the spindles and open at the bottom and there provided with the guideways 18 and 19, which are inclined at the angle shown, being an angle of forty-five degrees. In these guideways is mounted a hopper-bottom consisting of a plate 20, carrying at its forward end a rabbet 21, so constructed that in one position the plate 20 will close the bottom of the hopper and in another position the rabbet 21 will catch any spool falling from the bottom of the hopper, as shown in Fig. 5. The bottom of the rabbet is parallel with the guideways. It is necessary now that means should be provided for reciprocating the hopper-bottom, so that it may carry any spool received in its rabbet from below the hopper to between the spindles 2 and 3. This mechanism consists of a link 22, pivoted at one end to the hopper-bottom and at the other end to a bar 23, adapted to reciprocate longitudinally in a horizontal guideway on the main frame of the machine and extending all the way across the machine, so as to carry a link 22 for each hopper-bottom. This sliding bar 23 is moved by a lever 24, actuated by a cam 25 on the shaft 1, so constructed as to properly time the motions of the hopper-bottom. It is necessary, further, to supply an ejector to thrust the spool off from the end of spindle 2 when spindle 3 recedes. 26 is such an ejector, adapted to move parallel with the axis of the spindle from the position shown in Figs. 7 and 19 to the position shown in Fig. 21. This ejector consists simply of a projection adapted to abut against the head of the spool from the longitudinally-sliding bar 27, having suitable guideways in the frame and pivoted to the end of rock-arm 28, mounted upon the rock-shaft 220, which is actuated

through the arm 221 and the connecting-rod 222 from a cam 223 on shaft 1. Said cam is constructed so as to properly time the motions of the ejector.

The cams by which the parts of the mounting and dismounting mechanisms are actuated are timed to produce the following results: When the spindles are in readiness to receive a new spool, the spindle 3 will be in the receded position shown in Fig. 23, and while it remains so the hopper-bottom, carrying a spool in its rabbet, will be moved from the position shown in Fig. 5 diagonally upward until the axis of the spool is a trifle below the axial line of the spindles 2 and 3, as shown in Fig. 23. While the hopper-bottom holds the spool in this position, the spindle 3 is advanced, its projection 5 enters the spool-hole and forces the spool longitudinally toward the spindle 2 until the projection 4 enters the spool-hole at the opposite end, and the spool-head is clasped between the spring-pressed sleeve 8 and the serrated face of the spring-pressed sleeve 6. The conical form of the projections 4 and 5 will serve to center the spool with the axial line of the spindles 2 and 3, and thus slightly raise the spool off of the hopper-bottom, which is then retracted to its first position. (Shown in Fig. 5.) Then a new spool drops into its rabbet, and it so remains until the spool just mounted is completed. After the winding of the mounted spool is complete and the end of the thread has been secured and cut the spindle 3 is receded from the spindle 2, and the ejector, coming forward, pushes the spool off of the projection 4 and the spool drops into a suitable receptacle below through the opening between the bar 13 and the traversing bar 61, over which opening the spindles project transversely. The pressure of the sleeve 8 should be less during the winding operation than it is when the spool is being mounted and than it is when the spool is being slit. When the spool is being mounted, the pressure must be so great as to press the teeth of the sleeve or arbor 6 firmly against the head of the spool, and again, when the knife comes forward to slit the spool-head, so that the pressure of the knife will be fully opposed by the pressure of the sleeve 8; but when the thread is being wound to prevent the heating and wearing of the spindles it is desirable that the pressure of the sleeve 8 should be lessened. All of these three conditions are accomplished by the form of the cam 16, which, as shown in Fig. 2ª, is slightly flattened at and near its center, (between the points 224 and 225,) so as to allow the bar 13 a slight retreat under the combined pressures of the springs 9.

The spool-slitting mechanism.—As soon as the thread-winding mechanism has completed its function and stopped it is necessary that one flange of the spool should receive the customary slit, which I accomplish by means of a knife 29, located in the plane of a chord of the periphery of the spool-flange, as shown in Fig. 5, and extending so as so intersect the periphery sufficiently to make the depth of slit required. This knife projects in a horizontal plane from the head 30, being held in a horizontal slot therein. The head is, as clearly shown in Fig. 7, mounted upon the end of a longitudinally-sliding rod 31, provided with suitable guideways in the frame and connected by a link 32 to an arm 330, connected with a rock-shaft 340, which receives motion through the downwardly-extending arm 350 and the connecting-rod 56 from the cam 57 on shaft 1. The arm 330 is connected with the shaft 340 by being pivoted to an intermediate arm 58, fast on rock-shaft 340, and held from vibrating by the set-screws 59. By these set-screws the adjustment is made to take up the wear of the knife. The knife is also made adjustable in the slot on the head 30 to accommodate different sizes of spool-heads. The point of the knife is beveled so as to cut the spool-flange to the angle at which the thread will be pulled into the slot. 57 is a double-throw cam so timed that when the winding is completed the knife advances and makes its cut to the full depth, then recedes about one-eighth of an inch, or just far enough to allow the thread to get into the slit while still acting to guide the thread in, then recedes again after the thread is in the slit to its normal position. The form of this cam is illustrated in Fig. 7ª. The slot in which the knife is held being parallel with the guideways of the knife-bar, the knife will always be held in its plane of movement and requires no adjustment to make it cut in a uniform direction.

The thread-securing mechanism.—As soon as the spool-flange has been slit by the knife before described and after such knife has been partially but not wholly retracted from the slit, it is necessary that the thread between the thread-guide and the spool should be inserted and forced into the slit, so as to be held therein. To this end I provide an oscillating finger 33, the normal position of which is shown in Fig. 7, and the subsequent positions of which are shown in Figs. 16 to 19. This finger is of the form shown, being provided with a hook on the end. It is mounted upon a rock-shaft 34, to which a rocking motion is communicated from the cam 35 on the shaft 1 through the lever 36, connecting-rod 37, and the crank 38. This crank is so timed as to give the finger the following motions: The finger 33 rocks downward when the knife has slit the spool-flange and partially retreated from the slit. In its descent the finger catches the thread extending from the thread-guide to that end of the spool-barrel next the slitted flange, the stop motion having stopped the thread winding at the end of the spool-barrel. The finger swings above the knife 29 to a position slightly below the plane of the upper surface thereof, as shown in Fig. 17, so as to lay the thread on the flat upper surface of the knife and in position to be

seized by the hook 39, which draws the thread taut across the periphery of the spool-flange while the knife-surface guides it into the slit. While the finger 33 holds the thread in the position shown in Fig. 17, the thread-holding mechanism, which I will next describe and of which hook 39 is a member, advances and relieves the finger of the thread and the finger returns to its normal position (shown in Fig. 23) and remains there until another spool has been wound and slit. By having the finger oscillate instead of reciprocate, I am enabled to carry the thread down for enough for the hook 39 to grasp it with absolute certainty.

The thread cutting and holding mechanism.—As soon as the thread has been secured in the spool-split it is necessary that it should be cut between the spool and the thread-guide and that the end thus formed next the thread-guide should be held in proper position to enable the winding of a new spool to be started automatically. To this end I provide a reciprocating hook 39, the path of which is just outside the arc traversed by the finger at a point above the lowermost position of the finger, so that while the finger is down the thread between the flange and thread-guide will be drawn down into position to be caught by the holding-hook 39, as shown in Fig. 16. The holding-hook 39 is mounted upon a slide 40, adapted to reciprocate in horizontal guideways in the main frame. This slide 40 carries the holding-hooks for all the spindles and is reciprocated by a lever 41, actuated by a cam 42 on the shaft 1. In receding after having grasped the thread the holding-hook 39 retreats between two cheek-plates 43 and 44, which exert a spring-pressure against the sides of the hook 39 and one of which 43 is longer than the other 44. The thread will first be clamped between the plate 43 and the side of the hook 39, and as the hook retreats farther the thread while still clamped and held on that side of the hook will on the other side of the hook be brought against the chisel-edge of the plate 44 and thereby cut. Thus the spooled thread is cut loose from the thread yet on the bobbin and the end of the unspooled thread is held between the hook 39 and the cheek-plate 43, as shown in Fig. 20. It is still necessary that the end of the unspooled thread be brought into such position as to be held by a newly-mounted spool and to turn therewith. To this end I provide upon the ejector 23 a pin 45, projecting downward, so that the thread extended between the thread-guide and the cheek-plate 43 will lie in the path of this pin as the pin is carried forward by the ejector. The pin therefore catches the thread and carries it beyond the serrated end of the sleeve 6, so that when the pin retreats the thread will lie across the serrated end of the sleeve 6, as shown in dotted lines in Fig. 22. Now obviously as soon as a new spool is mounted the end of thread coming from the thread-guide will be clamped between the spool-head and the serrated end of sleeve 6. By mechanism hereinafter described the thread-guide at the commencement of the winding of a new spool will be opposite the junction between the flange and barrel of the spool. Therefore the thread will extend from where it is held between the spool-head and the end of sleeve 6 over the flange of the spool to the thread-guide, and as soon as the spool commences to turn will be wound upon the barrel thereof, leaving a projecting end extending out from the barrel and over the spool-head. To cut off this end, which is called the "scrap end," is the object of the mechanism which I will next describe.

The scrap-end-cutting mechanism.—46 is a knife mounted upon an arm 47, pivoted to the frame at 48 and rocked by the reciprocation of a slide 49, from which motion is communicated to the arm 47 through the pin 50 and the arm 51. The slide 49 (which has the same connection with a knife 47 for each spindle) is connected with a lever 52 by a bolt 53 and a link 230. Oscillating motion is given this lever through a rod 231 and a pin 232 from a cam 233 on the shaft 147, in antagonism to which cam the spring 234 acts. The knife 46 is made adjustable on the arm 47 by means of the set-screw 54 and vibrates between a position where its edge is in contact with the flange of the spool, as indicated in dotted lines, Fig. 7, and the position shown in full lines in Fig. 7. The parts from which this knife receives its motion are so timed that the edge of the knife is pressed against the flange of each spool immediately after the winding of the spool has commenced. This cuts off the end of the threads which passed from the barrel of the spool over the flange to the holding cheek-piece 43, and as soon as the hook 39 again advances the cheek-piece loosens its hold upon the end of thread and it drops into any suitable receptacle below. Having accomplished this function, the knife 46 rises again in time to be out of the way of the thread being wound upon the spool. It is insured that the scrap ends will not clog the machine, because the hook 39 moves horizontally, and each time it advances it pushes out from behind the cheek-piece the scrap end which it drew in when it previously retreated.

The thread-winding mechanism.—55 is the thread-guide, which is constructed and mounted on the same principle as described in Letters Patent granted to me, No. 413,447, dated October 22, 1889. The thread-guide and the parts connected with the same are mounted upon a standard 60, which is fixed upon a laterally-reciprocating frame 61, vibrated by longitudinally-reciprocating bolts 62 and 63, having guideways in boxes 64, mounted upon the main frame. These bolts connect the frame 61 with a yoke 65, from the middle of which yoke projects rearwardly the rod 66, mounted in bearings, enabling it to reciprocate longitudinally and bearing a carriage 67, which is fixed upon the rod 66 by the set-

screw shown in dotted lines in Fig. 12. The carriage 67 bears a screw-threaded nut 68, bolted to the carriage, within which nut turns a shaft 69, having an external screw-thread at 70, which engages with the screw-thread of the nut 68. The shaft 69 is mounted in suitable bearings, by which it is fixed longitudinally, and it carries upon one end the beveled gear-wheel 71, which meshes with the beveled gear-wheels 72 and 73, which turn freely upon the shaft 74, excepting as motion may be communicated alternately to one or the other of the gears 72 and 73 by the clutch 75, splined to the shaft 74 between them. The shaft 74, while the winding is in progress, is continually revolved through the line of gears 76, 77, 78, 79, and 80, the pulley 81, the belt 82, pulley 83, the shaft 84, the pulley 85, fast upon it, the belt 86, and the pulley 87, which is driven by the engine. 88 is an arm by which the clutch 75 is shifted alternately into engagement with the beveled gear-wheels 72 and 73 and which arm is mounted upon a longitudinally-reciprocating rod 89, the end of which is pivotally connected with a rocking arm 90, fixed upon a vertical shaft 93, upon which vertical shaft 93 is fixed a finger or dog-head 94. The point of this dog-head is V-shaped and engages with a V-shaped projection 95 on an arm 96, pivoted at 97 to the slides 98, and pressed against the dog-head 94 by the springs 99 and 100. The slide 98 is free to slide backward and forward in the direction of the arrow 101, Fig. 10, and carries the fingers 102 and 103, which are adjusted to slide to and from each other and which together constitute a shaper, the angular divergence of and distance between their adjacent sides timing the changes of traverse. The carriage 67 also bears an arm 104, which contains a slot 105, engaging with a stud 106 on the carriage. The carriage 107 is mounted so as to be free to reciprocate in the direction of the arrow 101, Fig. 10, upon a table 302, provided with a slot for that purpose. The table 302 is carried by friction-rollers 108 and 109, so as to reciprocate in the direction of the arrow 110, Fig. 12. Connected with one side of this table is a rod 111, mounted in bearings, enabling it to reciprocate with the table, and to the end of this rod is connected the cord 112, carrying the weight 113, which exerts a constant pull on the rod and on the table connected therewith. Upon the carriage 107 is mounted a stud 114, which extends upwardly between the fingers 102 and 103 of the shaper.

The operation of the thread-winding mechanism may be described as follows: It is apparent that the thread-guide is compelled to move in unison with the yoke 65 and that this yoke must be moved backward and forward in the direction of the arrow 115, Fig. 8, and that its length of traverse must be increased at every change of traverse in order to accommodate the flare of the spool-heads, and it is to convert the rotation of the pulley 87 into the traversing motions of the yoke 65 and its connected rod 66 that is the object of the mechanism which has been just described. The continuous rotation of the pulley 87 is conveyed through the train of belts, pulleys, and gears, already referred to, to the shaft 74, which is continuously rotated. The continuous rotation of the shaft 74 is communicated to the shaft 69, so as to turn the shaft 69 alternately in opposite directions, depending upon whether the clutch 75 engages with the beveled gear 72 or the beveled gear 73. When the shaft 69 revolves one way, the carriage 67 will traverse in one direction, and when the shaft revolves the other way the carriage will traverse in the other direction. Therefore it only remains to provide automatic means for shifting the clutch 75, in order to produce the requisite changes of traverse. The operation of this automatic mechanism is as follows: The stud 114, being connected with the stud 106, is compelled to traverse backward and forward with the carriage 67. As it traverses forward it will strike the finger 102 and as it traverses backward the finger 103 of the shaper. When it strikes finger 102, it will shove that finger and the slide 98 and the arm 96 forward with it, and the reverse operation takes place when it strikes finger 103. In Fig. 10 the V-shaped projection on the arm 96 and the dog-head 94 are shown in the position they occupy when the traverse is backward or toward the finger 103. When now the stud 114 strikes the finger 103 and thereby shoves the arm 96 backward, the first effect will be that the incline of 95 will slide up on the incline of 94 until it has passed the apex thereof, whereupon the springs 99 and 100 will press the opposite incline of 95 against the opposite incline of 94, so as to swing 94 back to the opposite end of its stroke. As, however, the finger 94 is swung it will shift the clutch 75 from engagement with one gear-wheel to engagement with the other, where it will remain until the stud 114 has moved into contact with and shoved the finger 102. When this occurs, the V-shaped projection 95 will be on the opposite side of the dog-head 94, and as it is carried backward it will swing the dog-head 94 back into the position shown in Fig. 10, thereby again shifting the clutch and placing the parts in position for producing the next change of traverse. Thus when the stud 114 shoves either member of the shaper the dog-head 94 is tripped backward or forward and the clutch 75 is shifted so as to produce the change of traverse; but it is necessary, also, that each traverse should be made longer than the preceding one, and it is evident that this may be accomplished by moving the stud 114 so that it constantly advances toward the extremity of the shaper, and thus, owing to the flaring sides of the shaper, has constantly a longer distance to travel before it commences to push either of the fingers thereof. The tendency of the weight 113 is obviously

to pull the carriage 107, bearing the stud 114, in the direction of the arrow 110, Fig. 12; but the carriage is drawn in the opposite direction in antagonism to the weight by a yoke 116, fixed at one end upon the rod 111, and mounted at its opposite end in a horizontal guideway 117 and provided with a laterally-projecting pin 118, which rests against a crown-cam 119. To this cam is fixed a ratchet-wheel 120, actuated by the pawls 121 and 122, each of which is pivoted to the opposite extremity of a rocker 123, centrally fixed upon a shaft 300, having its bearings in a standard 124 on the frame. Upon the opposite end of this shaft is fixed the oscillating arm 125, the extent of oscillation of which in both directions is limited by the adjustably-fixed set-screws 126 and 127. 128 is a rod pivoted to the arm 125 and connected by the stud 129 with a disk 130, clamped face to face with a disk 131 by a central bolt 132. A circular recess 133 is turned in the face of the disk 131, which is filled with an annulus 134 of leather or other material suitable for a friction-surface, also with an annulus 135 of suitable metal to form a frictional contact with the leather. The latter annulus is held from rotating on the disk 130 by a pin 136, and two or more set-screws, as 137 and 138, are provided for setting the annulus 135 up against the annulus 134, thus forming substantially a frictional clutch. The disk 131 is fixed to the yoke 65, and as this yoke reciprocates in the direction of the arrow 115, Fig. 8, the clutch compels the rod 128 to reciprocate with it in both directions, until on the forward traverse the arm 125 strikes against the set-screw 126, and until on backward traverse the arm 125 strikes against the set-screw 127. As soon as this arm strikes against either set-screw the friction between the disks 130 and 131 is overcome and the movement of the rod 128 will stop until the traverse changes. The set-screws 126 and 127 will be adjusted so that each of the pawls 121 and 122 will be moved alternately exactly the distance for it to engage a new tooth of the ratchet-wheel 120. In factory parlance the ratchet-wheel 120 is called the "row-cam," because it controls the number of rows of thread wound on the spool, two rows or layers being wound for each tooth. Therefore this row-cam is changed as the machine is required to wind different numbers of rows, and for each change of the row-cam the set-screws 126 and 127 must be adjusted correspondingly.

In the automatic machines heretofore used the thread-guide was lifted only once for every two rows of thread. Therefore the extent to which it was lifted was made the means between that required for each row, and hence one row would be wound loose because of too little pressure and the next tight because of too much pressure. In my machine, on the contrary, it will be observed that the row-cam and its co-operating mechanism causes the thread-guide to be receded at the commencement of each row. This not only benefits the quality of the work done, but increases the speed of the machine, because the equality of pressure diminishes the tendency to burn or break the thread when running at a high speed. Now it will be evident that on the forward traverse of the yoke 65 the pawl 122 will rotate the ratchet-wheel 120, and that on the backward traverse the pawl 121 will rotate the ratchet-wheel 120. Therefore the ratchet-wheel 120 will move intermittently on each traverse, and likewise the cam 119. This produces a corresponding motion in the yoke 116, the rod 111, the carriage 107, and the stud 114 in antagonism to the weight 113, and thus intermittently the stud 114 is on each traverse moved nearer to the extremity of the shaper, and thereby given a longer distance to travel on each succeeding traverse than on the preceding one before giving the shove to the shaper which is necessary for changing the traverse. The shaft of gear 79 is mounted in a slot concentric with gear 78, so that it admits of different-sized gear 80 being used for different-sized thread without altering the distance between the centers of the belt 82; also, the pulleys 81 and 83 are made conical, so as to take up the pitch of the fraction of a tooth if the size of thread requires it.

I have now described the parts and the operations necessary for imparting to the yoke 65 the traverses, which grow successively longer from the commencement of the spool to its finish, which traverses are communicated to the bar 61, carrying all the thread-guides. It is further necessary to manipulate the thread-guides so that each of them automatically retreats from the barrel of the spool as the thread accumulates thereon until the last two (more or less) traverses are reached, when it is necessary that the thread-guide should press against the thread with sufficient force to give it the external smooth appearance necessary for a marketable article. For thus manipulating the thread-guide the following means are provided: The standards 60 for the thread-guide, instead of being fixed directly upon the bar 61, are fixed upon slides 139 and 140, having suitable longitudinal guideways in the bar 161. These slides are urged in the direction of the arrow, Fig. 3, by a weighted lever 141, acting through the cord 142, so that when the pull of this cord upon the slides 139 and 140 is unopposed the full pressure derived from the weighted lever will be distributed among the thread-guides and delivered by them on the spools. To shove the slides 139 and 140 in antagonism to the weighted lever 141 during all the traverses except the last two, (more or less,) a scroll-cam 143 is arranged to operate upon a roller 235, mounted on the slide 140. This scroll-cam 143 is fixed upon a shaft 147, which receives motion through the beveled gears 148 and 149 from the shaft 150, being the same shaft upon which are fixed the intermittently-moving ratchet-wheel 120 and cam 119. Therefore the

scroll-cam 143 will be moved intermittently on each traverse, and it is so constructed that for each movement it causes the thread-guide to retreat the thickness of a layer of thread on each traverse until the last two, (more or less,) when the roller 235 will fall off the point of the cam and the subsequent retreat of the thread-guide will be due to the accumulation of thread which will bear the pressure of the weighted lever 141. Obviously the scroll-cam 143 will be changed for different sizes of thread. The thread-guide is adjustably secured by a set-screw 236 and slot to a support 237, pivoted to the stud 60, so that the operator may at any time throw it back into the position shown at the left of Fig. 5. It is held either thrown back or thrown forward by a latch 238, engaging with a stud 301 on the tail of the support 237; but when winding it occupies the forward position. (Shown at the right of Fig. 5.) Each of the spindles 2 is rotated from the shaft 151 through the beveled gears 152 and 153, and the shaft 151 is driven by the beveled gears 154 and 155 from the shaft 84, upon which the pulley 85 is fixed. Each spindle has a bearing in the two branches A and B of the main frame. To take the thrust of mounting the spools, I provide in front of the back bushing 277 a friction-washer 278, in front of which are placed the lock-nuts 279 and 280. While the thread-winding is in progress the thread-guide support 60 is forward, as shown at the right of Fig. 5; but as soon as the winding is finished it is necessary for this support to be moved backward automatically, so that the thread-guide will be out of the way of the other operations. This is accomplished by a cam 212 on shaft 1, which connects with slide 139 140 by a lever 213, pivoted to the stud 214. While the winding is in progress and the cam 212 is stationary, this lever rests in a notch in the cam, as shown in Fig. 1; but while the shaft 1 revolves the lever is raised out of this notch and the thread-guides are thus shoved back, as required.

Stopping and starting motions.—The object of the stop-motion is to shift the belt 86 from the pulley 85, fast on the shaft 84, to the loose pulley 157, which is fast upon the sleeve 172, carrying the worm 164, and at the same time to apply a brake-strap 158 to the pulley 159, which is connected to the pulley 85. As the pulley 85 turns, the shaft 84, on which it is fixed, at the same time drives the spindle-turning shaft 151, and the belt 82, by which the traverse actuating and changing mechanism is run. As the pulley 157 turns, the sleeve 172, to which it is fixed through the worm 164 and the worm gear 165, drives the shaft 1, from which are taken the motions which which are in operation while the winding is suspended and which shaft 1 makes a complete revolution each time the winding is suspended. 160 is the belt-shifter, which is constantly urged in the direction of the arrow 161 by the weight 162, acting through the cord 163. The belt-shifter 160 slides upon a bar 167, and this bar in turn slides in guideways on the frame. A pin 168 from the bar 167 projects into a slot in the belt-shifter 160, as shown in Fig. 8. The bar 167 is constantly urged in the direction of the arrow 169 by the weighted lever 170, and the weight 171 on this lever is sufficient to overbalance the weight 162 and move the sliding bar 167 and the belt-shifter 160 from the position shown in Fig. 8 to that shown in Fig. 13. While the operation of winding is in progress, a hook 174 engages with a notch in the sliding bar 167 and prevents its from yielding to the weighted lever 170. It will be remembered, however, that the shaft 150 moves during the winding operation intermittingly once during each traverse and that it makes one complete revolution for each complete winding operation. This motion is imparted to an arm 175, fixed upon it and carrying adjustably secured in a slot the pin 176. 177 is a lever resting, normally in the position shown in Fig. 8, upon a stud 178, which it carries, but having an adjustable point 179 at its opposite extremity which projects into the path of the pin 176, so that the lever 177 is tripped into the position shown in Fig. 13 once for each rotation of the shaft 150. On the top of the lever 177 rests a pin 180, sliding freely in a stock 181, which is pivoted at 182 and provided with a laterally and upwardly projecting arm 183. This pin 180 extends entirely through the stock 181 and is forced upward, so as to project farther above the stock, as shown in Fig. 13, by the lever 177 as the latter rises. When the pin 180 is in its lowermost position, it is not within the path of the movement of the rod 184; but when it is in its raised position it projects within the path of the movement of that rod. The rod 184 is mounted at one end with capacity for longitudinal adjustment upon the traversing yoke 65 and projects through suitable guideways toward the top of the pin 180 when in its highest position. When therefore the pin 180 is raised, the next backward traverse of the yoke 65 will cause the rod 184 to shove the pin 180 over into the inclined position shown in Fig. 13, so as to raise the arm 183 and the arm 144 resting on it, by which the hook 174, which is connected with the arm 144, is tripped out of the notch in the slide 167 and the slide shoots from the position shown in Fig. 8 to that shown in Fig. 13, dragging the belt-shifter with it, so as to shift the belt from pulley 85 to pulley 157 and permit the nose of the lever 185 to fall behind the projection 186 on the belt-shifter and hold the belt-shifter in that position against the impulse of the weight 162 even after the slide 167 has been returned to the position shown in Fig. 8, which is accomplished as follows: On the shaft 1 is a collar carrying the projection 187. A lever 188, pivoted at 189, is arranged so that one arm in one position comes within the path of the projection 187. The other arm of the le-

ver 188 is pivotally connected by a link 190 with one arm of the lever 191, pivoted at 192, and carrying upon its opposite arm the friction-roller 193, which bears against the side of the upper arm of lever 170. Now as the projection 187 is carried around by rotation of shaft 1 it will strike lever 188 and thrust it from the position shown in Fig. 13 to that shown in Fig. 8, compelling the slide 167 to return to the position shown in Fig. 8, where it is seized and held by the hook 174. 194 is a projection upon the shaft 1, adapted to strike the lower arm of the lever 185 as the shaft 1 rotates, and after the shaft has revolved, so that the projection 187 has thrust the slide 167 into the position shown in Fig. 8, the further rotation of the shaft soon brings the projection 194 under the tail of the lever 185, so as to lift the nose of that lever from behind the projection on the belt-shifter and permit the belt-shifter to be pulled by the weight 162 back into the position shown in Fig. 8. To the rear end of the slide 167 is fixed a bracket 195, and this in turn carries a wedge 196. This wedge projects through a slot in the bolt 197, connected with one end of the brake-band 158. When the slide 167 moves forward in the direction of arrow 169, it advances the wedge 196 in its slot and brings the brake-band 158 down upon the pulley 159 and stops the shaft 84 and all the thread-winding and traverse-changing mechanism connected with it. The brake-band is loosened by the retreat of the wedge with the backward movement of the slide 167. 198 is a friction-block fixed with capacity for back-and-forth adjustment upon a bracket 199, fixed upon the belt-shifter 160. This friction-block 198 is beveled and provided with a co-operating beveled friction-surface at the edge of the flange of the pulley 157, so that when the belt-shifter is in position to throw the belt on pulley 85 the friction-block 198 will act as a brake on the pulley 157 and stop that pulley and the shaft 1 and the other mechanism connected therewith; but when the belt-shifter is in position to throw the belt on pulley 157 the friction-block will be out of contact with the latter pulley. A non-automatic stop motion is also provided, which consists of the belt-shifter 209, operated by the hand-lever 210 through the rock-shaft 211.

Start-fixing mechanism.—When the spool has been wound, it leaves the thread-guides in line with the periphery of the spool-head, or, in other words, at the end of the longest traverse. When new spools are inserted and the winding recommences, the thread-guide must be in line with the barrel of the spool, or, in other words, within the bounds of the shortest traverse, and the mechanism about to be described is for moving the thread-guide intermediate the winding operations from the end of the longest traverse to within the bounds of the shortest traverse. The shaft 1 is connected by the gears 200 and 201 with the shaft 202, carrying the eccentric connecting-rod 203, which oscillates the arm 204, fixed on the shaft 205. 206 is another arm fixed on the shaft 205 and oscillating therewith and to which is pivoted a pawl 207, engaging with a ratchet-wheel 208, fixed to the beveled gear-wheel 72. Now through the chain of mechanism just described the beveled gear 72 will be rotated as the shaft 1 makes its revolution, so as to move the thread-guides upon their backward traverse the proper distance, for the purpose above set forth. In practical operation, however, something more is necessary, because the practice is to stop the winding just short of the end of the spool, and therefore just before the dog-head 94 has passed over the V-shaped projection 95, which it is necessary that it should pass over for the start-fixing mechanism to properly perform its function. To cause this result, I provide on the shaft 1 a projection 275, which as the shaft revolves will strike a projection 276 on the slide 98 and kick that slide over far enough to throw the dog-head 94 on the opposite side of the V-shaped projection 95 to that shown in Fig. 10. In practice the winding will stop before the pin 118 has passed over the highest point of cam 119, and it is necessary that this cam should be moved enough for that purpose while the winding is suspended, so as to allow the stud 114 to move back into position for the short traverse of the next winding operation. To this end I provide on the shaft 1 an eccentric pawl 281, engaging with the ratchet-wheel 282 on shaft 150. Each revolution of shaft 1 will cause the pawl to turn the ratchet-wheel, and consequently cam 119, just far enough for the purpose indicated.

Among the many features combined in my machine may be mentioned the following: The spindles run transversely of the machine and the length of space occupied by them is less than five and a half feet, the total length of the machine being only six feet. By confining the spindles within this space the operative standing in the center may reach all the spindles without walking. The shaft 69 being arranged below the shaft 84, one does not project materially farther backward than the other and the depth of the machine is thus limited. The spindles are securely journaled and can be removed with great convenience. The spools are held over an open space, through which they are dropped. The spindle-driving gears are entirely out of the way at the back of the machine. The thread-guides are so located that the spools are open to inspection from above at all steps of the winding. The non-reciprocating spindles project side by side from the front of a stationary frame, in which their bearings may be prolonged to any extent. The reciprocating spindles project inversely from the front bar of a three-sided frame, the two end bars of which slide on the stationary frame and connect with the cams at their extremities. The thread-guides are mounted on the front bar

of substantially a square frame, the two end bars of which slide on the stationary frame, and the rear bar or yoke of which at its middle is connected with the traversing nut, which is continuously in gear with the screw-threaded shaft, which shaft reverses to reciprocate the nut. The mechanisms for driving the spindles are arranged at the back of the main frame, where sufficient compass is to be had for distributing them and embodying them in cams arranged upon a single shaft, so as to increase their accessibility, simplicity, and positiveness of action and enable a person setting the cams to glance along the line and time them with great ease and accuracy. The thread-guide retreats in a right line. The same surface of contact with the thread is preserved throughout the whole winding, and when in position to operate, the motions of the guides being controlled by rectangular slides, the guides and guide-holders may be mounted on planed surfaces, which insure their always coming to the proper adjustment when removed and replaced. The thread-guide retreats at the beginning of each row or layer of thread, and equality of pressure is therefore preserved. The same belt drives all the mechanisms. The slit is cut in the bottom of the spool and the holding-hook works horizontally, so that after the scrap end is cut off the next forward motion of the hook will allow the scrap end to drop down without clogging. The thread is introduced across the spool-abutment of the non-reciprocating spindle without any reciprocating movement of that abutment. The machine is stopped by the thrust of a rod adjustably fixed on the traversing frame, enabling the stop motion to be accurately brought into play at any point of the traverse, preferably just a trifle before the end of the last row is reached, to have the thread go properly into the slit. A continuous bed-plate underlies and connects the supports of all the bearings. The thread-guides are brought to the end of the shortest traverse when the spindles are not turning. The hoppers are arranged upright between the spindles. The spool is conveyed from the hopper to the spindle in an upwardly-inclined direction, so as to offer no obstruction either above or below the spindle and enable the spool to be retained in an angle of the carrier without being secured, and to admit of the direct retreat of the carrier. Experience has demonstrated that the implements for handling the thread and spools and the mechanism for stopping and starting are so accurate, positive, and certain that the number of defective spools and mechanical attention or repairs necessary are reduced to a minimum, even when the speed is unprecedentedly high.

I claim—

1. In a thread-winding machine, in combination, a stationary frame, a reciprocating frame parallel thereto, a series of divided and parallel spindles crossing the space between said frames, means whereby said reciprocating frame is actuated and means whereby the spindles are rotated, a laterally-traversing bar arranged transversely of the spindles, a slide on said bar, a series of thread-guides mounted on said slide, and means whereby said slide is actuated to intermittently retract the thread-guides, substantially as described.

2. In a thread-winding machine, in combination, a stationary frame, a reciprocating frame parallel thereto, a series of divided and parallel spindles crossing the space between said frames, means whereby said reciprocating frame is actuated and means whereby the spindles are rotated, a laterally-traversing bar arranged transversely of the spindles, a series of thread-guides mounted thereon, a series of hoppers intermediate the spindles, a series of reciprocating hopper-bottoms, a slide transversely of the spindles, and connections between said slide and said hopper-bottoms, whereby the hopper-bottoms are moved transversely of the spindles, substantially as described.

3. In a thread-winding machine, in combination, a stationary frame, a reciprocating frame parallel thereto, a series of divided and parallel spindles crossing the space between said frames, means whereby said reciprocating frame is actuated and means whereby the spindles are rotated, a laterally-traversing bar arranged transversely of the spindles, a series of thread-guides mounted thereon, a series of knives reciprocating parallel with the spindles, means whereby they are reciprocated, and means whereby the threads are inserted in the slits formed by the knives, substantially as described.

4. In a thread-winding machine, in combination, a stationary frame, a reciprocating frame parallel thereto, a series of divided and parallel spindles crossing the space between said frames, means whereby said reciprocating frame is actuated and means whereby the spindles are rotated, a laterally-traversing bar arranged transversely of the spindles, a series of thread-guides mounted thereon, a series of spool-slitting knives, a series of fingers, means whereby they are moved in a plane parallel with the spindles, and a series of hooks and means whereby they are reciprocated across the path of the fingers, substantially as described.

5. In a thread-winding machine, in combination, a stationary frame, a reciprocating frame parallel thereto, a series of divided and parallel spindles crossing the space between said frames, means whereby said reciprocating frame is actuated and means whereby the spindles are rotated, a laterally-traversing bar arranged transversely of the spindles, a series of thread-guides mounted thereon, a series of spool-slitting knives, a series of mechanisms whereby the thread is placed in the slit and cut, an abutment for the end of the spool, an ejector separate from the abut-

ment, and means whereby the ejectors are moved parallel with the spindles, substantially as described.

6. In a thread-winding machine, in combination, a stationary frame, a reciprocating frame parallel thereto, a series of divided and parallel spindles crossing the space between said frames, means whereby said reciprocating frame is actuated, and means whereby the spindles are rotated, a laterally-traversing bar arranged transversely of the spindles, a series of thread-guides mounted thereon, a series of spool-abutments, a series of spool-slitting knives, a series of mechanisms whereby the thread is carried into the slits and cut and to a retainer, a retainer, and a series of pins whereby the thread is carried forward of the face of the abutments, substantially as described.

7. In a thread-winding machine, in combination, a stationary frame, a reciprocating frame parallel thereto, a series of divided and parallel spindles 2 and 3, crossing the space between said frames, means whereby said reciprocating frame is actuated and means whereby the spindles are rotated, a laterally-traversing bar arranged transversely of the spindles, a series of thread-guides mounted thereon, a series of holders 11, and a series of clamps whereby the spindle parts are removably secured to said reciprocating frame, substantially as described.

8. In a thread-winding machine, in combination, a stationary frame, a reciprocating frame parallel thereto, a series of divided and parallel spindles crossing the space between said frames, means whereby said reciprocating frame is actuated and means whereby the spindles are rotated, a laterally-traversing bar arranged transversely of the spindles, a series of thread-guides mounted thereon, a traverse screw-shaft, a nut engaging the same, a clutch adapted to drive said shaft in opposite directions, and means whereby said clutch is shifted at the end of each traverse, substantially as described.

9. In a thread-winding machine adapted for winding a series of spools at one time, in combination, the main frame, a series of thread-guides, a traversing bar, a member mounted to move on said bar with which the thread-guides are connected, mechanism whereby said member is moved to cause the retreat of the thread-guides intermittently, end pieces extending from said traversing bar by the frame of the machine, bearings in said frame for said end pieces, a yoke on the opposite side of the frame connecting said end pieces, mechanism whereby said yoke is caused to traverse, mechanism whereby said traverses are stopped, and mechanism whereby said traverses are started automatically, substantially as described.

10. In combination, the spindle, the knife below the central level of the spindle, the thread-guide above the central line of the spindle, the finger moving in a downwardly-inclined direction between the guide and spool and over the knife, the hook intercepting the path of the finger and moving beneath the spindle, the retainer, and the pusher, whereby the thread is thrust in front of the shoulder of the spindle, substantially as described.

11. In combination, the spindle, the thread-guide, the knife whereby the spool is slit, the finger whereby the thread is placed in the slit, the hook 39, and a spring cheek-plate 43, whereby the thread from the thread-guide is held against the side of the hook, and means whereby said hook is reciprocated relatively to said cheek-piece, substantially as described.

12. In combination, the frame of the machine, the spindle, the thread-guide, the spool-slitting knife, the finger oscillating between the thread-guide and the spool, a reciprocating hook 39, a slide whereon this hook is mounted moving at right angles with the axis of the spindle, and means of securing the thread on the opposite side of the spindle from the thread-guides, substantially as described.

13. In a thread-winding machine, in combination, a divided spindle, a spool-abutment on each part thereof, mechanism whereby one part of the spindle is pressed toward the other part with a maximum pressure when the spindle is not rotating and a minimum pressure when the spindle is rotating, and a spring permitting the parts to yield to such pressure, substantially as described.

14. In a thread-winding machine, in combination, a divided spindle, mechanism whereby one-half is reciprocated, a reciprocating spool-carrier, and an upwardly-inclined guideway, whereby the spool-carrier is caused to approach from one side and below, whereby the spool neither interferes with the direct retreat of the carrier nor the carrier with the dropping of the spool when wound, substantially as described.

15. In a thread-winding machine, in combination, a spindle, a slitting-knife, and mechanism whereby said knife is moved in a line crosswise of the flange of the spool, substantially as described.

16. In a thread-winding machine, in combination, a spindle, a slitting-knife, a knife-stock, and mechanism whereby said knife is moved in a line crosswise of the flange of the spool, said knife-stock being provided with a recess in the plane of motion of the knife wherein the knife may be adjusted, substantially as described.

17. In a thread-winding machine, in combination, a spindle having a spool-abutment, a slitting-knife, a finger whereby the thread is moved laterally, a hook and knife whereby the thread is held and cut, and a member whereby the thread is returned laterally in front of the abutment, substantially as described.

18. In a thread-winding machine, in combination, a spindle, a spring-pressed spool-

abutment on the spindle, an ejector whereby the spool is ejected from the spindle, a knife separate from the ejector, whereby the spooled thread is severed from the unspooled thread, and a member whereby the end of the unspooled thread is brought into position across the end of the abutment to be clamped against the same by the spool to be placed upon the spindle, said member being mounted on the ejector, substantially as described.

19. In a thread-winding machine, in combination, a divided spindle, a spring-pressed abutment upon each part thereof, and mechanism whereby one part of the spindle is pressed toward the other part with a maximum of pressure when the spindle is not rotating and a minimum of pressure when the spindle is rotating, substantially as described.

20. In a thread-winding machine adapted to wind a series of spools at once, in combination, a series of spindles, a transversely-arranged bar, as 40, guideways in the frame wherein said bar slides transversely of the spindles, a series of hooks carried by said bar, a shaft, as 34, arranged transversely of the spindles, means whereby said shaft is rocked, and a series of fingers upon said shaft, each adapted to draw the thread over the spool-flange into position to be engaged by one of said hooks, substantially as described.

21. In a thread-winding machine adapted for winding a plurality of spools at once, in combination, a series of spindles arranged approximately parallel with one another and projecting in front of the main frame of the machine, a series of hoppers arranged one between every two spindles, a series of sliding hopper-bottoms, whereby the spools are carried transversely to the spindles, a slide extending transversely of the spindles, to which all of said hopper-bottoms are connected, and means whereby said slide is reciprocated, substantially as described.

22. In a thread-winding machine adapted for winding a series of spools at once, in combination, a series of spindles arranged approximately parallel with one another and projecting to the front of the main frame of machine, the following slides having transverse guideways in the main frame of the machine, viz: the slide for carrying the series of half-spindles, the slide for carrying the slit-cutting knife, the slide for carrying the ejector, the slide for carrying the traversing bar, and the following slides having longitudinal guideways in the main frame of the machine, viz: the slide for carrying the thread-securing hook, the slide for carrying the mechanism whereby the spools are conveyed from the hopper to the spindle, and the slide for carrying the scrap-end cutter, substantially as described.

23. In a thread-winding machine adapted for winding a series of spools at once, in combination, a series of spindles arranged approximately parallel with one another and projecting to the front of the main frame of the machine, a traversing slide having guideways transverse of the main frame of the machine, a slide superposed upon the same, mechanism whereby said last-mentioned slide is moved in a direction longitudinally of the main frame, and the series of thread-guides mounted upon said last-mentioned slide, substantially as described.

24. In a thread-winding machine, in combination, mechanism for completing and changing the spools, the traverse screw-shaft, and mechanism whereby the motion of the said first-named mechanism is communicated to the said shaft, whereby the thread-guide while the spindle is at rest is moved to the end of the short traverse by the rotation of said screw-shaft, substantially as described.

25. In a thread-winding machine adapted to wind a plurality of spools at once, in combination, the series of thread-guides, a rod with which they are all connected, a cam actuating said rod to cause the retreat of the guides from the spools, a ratchet-wheel connected with the said cam, a rocker, two pawls connected with the opposite ends of the rocker, and means whereby said rocker moves in unison with the traverses, whereby the ratchet is actuated by one pawl for the forward traverse and the other pawl for the backward traverse, substantially as described.

26. In a thread-winding machine, in combination, traversing mechanism, a thread-guide, a cam by which it is retreated from the spool, a friction-clutch mounted on the traversing mechanism, a rod connected with said friction-clutch, mechanism whereby the motion of said rod actuates said cam, and an adjustable stop whereby the extent of motion of said rod is regulated, substantially as described.

27. In a thread-winding machine, in combination, traversing mechanism, a thread-guide, a cam by which it is retreated from the spool, a friction-clutch mounted on the traversing mechanism, a rod connected with said friction-clutch, a rocker, two pawls, a ratchet-wheel, and two adjustable stops whereby the extent of motion in both directions received by said rod is regulated, substantially as described.

28. In a thread-winding machine, in combination, the bed-plate E, the spindle-turning shaft 151, the cam-shaft 1, the traverse screw-shaft 69, the bearings of all of said shafts mounted upon said bed-plate, the vertical plate A, mounted upon the front edge of said bed-plate, the spindle-shafts 2, having bearings in the plate A and projecting at right angles therethrough, substantially as described, whereby the bearings of all said shafts are mounted upon the same bed-plate.

29. In a thread-winding machine, in combination, a traverse screw-shaft, a nut permanently engaging therewith, a traversing frame, a clutch adapted to cause the rotation of said shaft in either direction, a shaper connected with said clutch, a stud co-operating

with said shaper and connected to and moving in unison with the traverse-frame, a spool-dismounting mechanism, a pulley whereby the same is actuated, a pulley whereby the traversing mechanism is actuated, a belt, a belt-shifting mechanism, and mechanism connecting the traverse-frame with the belt-shifting mechanism, substantially as described.

30. In a thread-winding machine, a bed-plate E, a vertical plate A, mounted thereon, provided with a front horizontally-extending flange C, having guideways, a series of spindle-shafts 2, having their bearings in the plate A and projecting at right angles therethrough above the flange C, and the spool-conveyers 21 and the slide 23, mounted in said guideways, substantially as described.

31. In a thread-winding machine, in combination, a thread-winding mechanism and a pulley for actuating the same, a mechanism for completing and changing the spools and a pulley for actuating the same, a belt to drive said pulleys alternately, mechanism whereby said belt is shifted from one of said pulleys to the other, and vice versa, automatically, a traverse-frame, a traverse screw-shaft, a nut permanently engaging the same, a clutch adapted to drive said shaft in either direction, a shaper connected with said clutch, a stud co-operating with the shaper, and means whereby said stud is moved in unison with the traverses, substantially as described.

32. In a thread-winding machine, in combination, a thread-winding mechanism and a pulley for actuating the same, a mechanism for completing and changing the spools and a pulley for actuating the same, a belt to drive said pulleys alternately, a traverse-frame, a traverse screw-shaft, a clutch adapted to drive said shaft in both directions, mechanism whereby said clutch is shifted at the ends of the traverses, and the following mechanism whereby said belt is shifted from one pulley to the other, and vice versa, viz: a belt-shifter, a weight connected with the same, a pawl whereby the belt-shifter is held in antagonism to said weight, means whereby said pawl is tripped at the end of each winding operation, and mechanism whereby the belt-shifter is returned into engagement with said pawl at the commencement of each winding operation, substantially as described.

33. In a thread-winding machine, in combination, a thread-winding mechanism and a pulley for actuating the same, a mechanism for completing and changing the spools and a pulley for actuating the same, a belt to drive said pulleys alternately, and the following mechanism whereby said belt is shifted from one pulley to the other, and vice versa, viz: a belt-shifter, a slide upon which the belt-shifter reciprocates, weights urging the belt-shifter and slide respectively in opposite directions, the latter overbalancing the former, a pawl whereby the belt-shifter is held in antagonism to the slide-weight, a pawl whereby the belt-shifter is held in antagonism to its own weight, means whereby said first pawl is tripped at the end of each winding operation, means whereby the slide is returned in antagonism to its weight, and means whereby said second pawl is tripped at the commencement of each winding operation, substantially as described.

34. In a thread-winding machine, a shaft connected both with the mechanism for revolving the spindles and with the mechanism for producing the traverses, a sleeve mounted loosely on said shaft connected with the mechanism for completing and changing the spools, means whereby said shaft and said sleeve are actuated alternately, a traverse screw-shaft, a nut permanently engaging the same, and a clutch whereby said shaft is turned alternately in opposite directions, substantially as described.

35. In a thread-winding machine, in combination, a stationary frame, a reciprocating frame parallel thereto, a series of divided and side-by-side spindles, means whereby the spindles are rotated, the bar 14, connected with said reciprocating frame, and the cam by which it is operated, provided with a centrally-flattened surface, whereby the pressure is reduced intermediate the mounting of the spool and the operation of the knife, substantially as described.

36. In a thread-winding machine, in combination, a series of divided and side-by-side spindles, means whereby one division of said spindles is reciprocated relatively to the other, spindle-rotating mechanism, a series of spool-conveyers 21, and the following parts for operating said conveyers, viz: the slide 23, transversely of the spindles, the lever 24, the cam 25, and means for operating said cam, substantially as described.

37. In a thread-winding machine, in combination, a series of divided and side-by-side spindles, means whereby one division of said spindles is reciprocated relatively to the other, spindle-rotating mechanism, a series of knives 29, a series of longitudinally-sliding knife-bars 31, a series of arms 330, and the following parts for operating the same, viz: rock-shaft 340, arm 350, connecting-rod 56, cam 57, and means whereby said cam is operated, substantially as described.

38. In a thread-winding machine, in combination, a series of divided and side-by-side spindles, means whereby one division of said spindles is reciprocated relatively to the other, spindle-rotating mechanism, a series of ejectors 26, a series of longitudinally-sliding bars 27, a series of arms 28, and the following parts by which the same are operated, viz: rock-shaft 220, arm 221, connecting-rod 222, cam 223, and means whereby said cam is operated, substantially as described.

39. In a thread-winding machine, in combination, a series of divided and side-by-side spindles, means whereby one division of said spindles is reciprocated relatively to the other, spindle-rotating mechanism, a series of oscil-

lating fingers 33, and the following parts by which said fingers are operated, viz: rock-shaft 34, arm 38, connecting-rod 37, cam 35, and means whereby said cam is operated, substantially as described.

40. In a thread-winding machine, in combination, a series of divided and side-by-side spindles, means whereby one division of said spindles is reciprocated relatively to the other, spindle-rotating mechanism, a series of hooks 39, and the following parts by which said hooks are operated, viz: slide 40, lever 41, cam 42, and means whereby said cam is operated, substantially as described.

41. In a thread-winding machine, in combination, a series of divided and side-by-side spindles, means whereby one division of said spindles is reciprocated relatively to the other, spindle-rotating mechanism, the series of knives 46, the series of knife-arms 47, and the following parts by which the same are operated, viz: slide 49, lever 52, cam 233, and means whereby said cam is operated when the spindles rotate, substantially as described.

42. In a thread-winding machine, in combination, a series of divided and side-by-side spindles, means whereby one division of said spindles is reciprocated relatively to the other, spindle-rotating mechanism, a series of thread-guides, a traversing frame carrying the same, a nut 68, connected therewith, a screw-shaft 69, and the following parts for operating said screw-shaft, viz: gear 71, fast thereon, shaft 74, gears 72 and 73, turning freely thereon and meshing with gear 71, and a clutch 75, splined to said shaft 74, substantially as described.

43. In a thread-winding machine, in combination, a series of divided and side-by-side spindles, means whereby one division of said spindles is reciprocated relatively to the other, spindle-rotating mechanism, a series of thread-guides, slide 140, carrying the same, cam 143, moving said slide, shaft 147 upon which said cam is mounted, traversing mechanism, and means whereby said shaft 147 is moved at each traverse of the thread-guides, substantially as described.

44. In a thread-winding machine, in combination, a series of divided and side-by-side spindles, means whereby one division of said spindles is reciprocated relatively to the other, spindle-rotating mechanism, a series of thread-guides, a screw-shaft whereby they are caused to traverse, mechanism for finishing the spool after winding, and the following parts whereby the thread-guides are moved to the commencement of the short traverse intermediate the winding operations, viz: the ratchet-wheel 208, means whereby it is operatively connected with the traverse-screw, the pawl 207, and means whereby it is operatively connected with the said mechanism for finishing the spool after winding, substantially as described.

CHARLES HILL.

Witnesses:
J. E. GREER,
FRED. KEMPER.