United States Patent [19]

Eckerle et al.

[11] **3,912,427**

[45] **Oct. 14, 1975**

[54] **HIGH PRESSURE GEAR PUMP**

[75] Inventors: **Otto Eckerle; Robert Jung,** both of Malsch, Germany

[73] Assignee: **Otto Eckerle,** Malsch, Germany

[22] Filed: **Jan. 2, 1974**

[21] Appl. No.: **430,158**

[30] **Foreign Application Priority Data**

Jan. 5, 1973 Germany 2300484

[52] **U.S. Cl.** **418/71;** 418/133; 418/170

[51] **Int. Cl.**[2] **F04C 1/06;** F04C 15/00

[58] **Field of Search** 418/71, 72, 73, 133, 170

[56] **References Cited**

UNITED STATES PATENTS

3,315,609	4/1967	Eckerle	418/73
3,779,674	12/1973	Eckerle	418/71

FOREIGN PATENTS OR APPLICATIONS

1,266,134	4/1968	Germany	418/71
1,000,559	1/1957	Germany	418/71

Primary Examiner—C. J. Husar
Assistant Examiner—Leonard Smith
Attorney, Agent, or Firm—Joseph A. Geiger

[57] **ABSTRACT**

An internally geared high pressure gear pump with axial and radial pressure compensation means, in which the radial compensation pressure fields are equal in number and opposite to the tooth gaps of the gear ring, their angular length being defined by sealing blades carried by the gear ring. The central compensation pressure field may be neutralized in order to reduce the total pressure.

8 Claims, 6 Drawing Figures

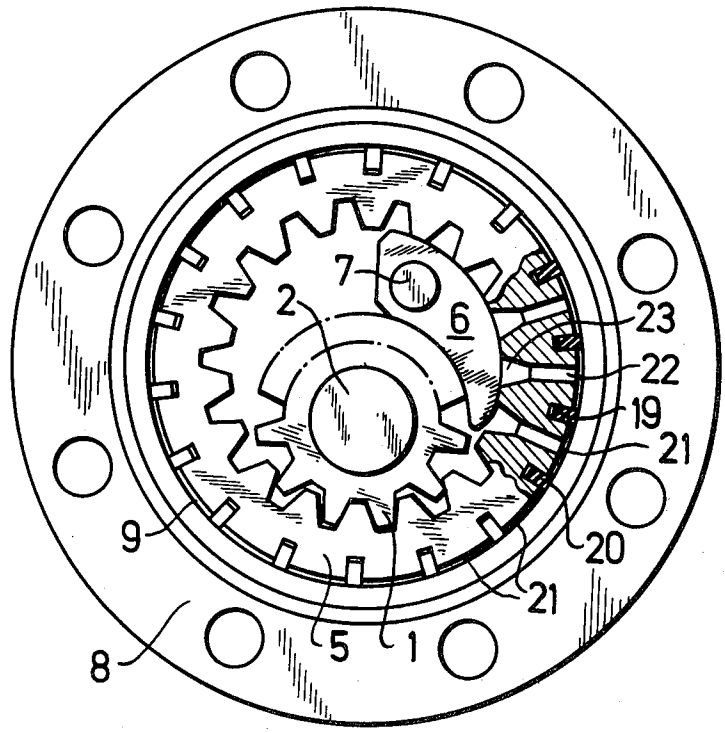

Fig. 1

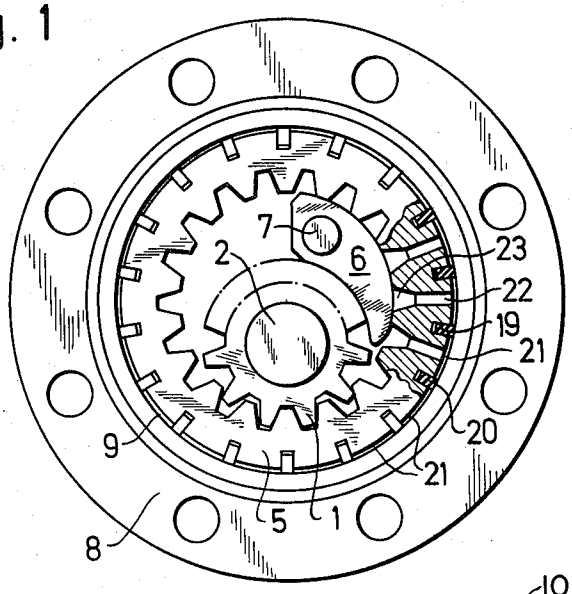

Fig. 2a

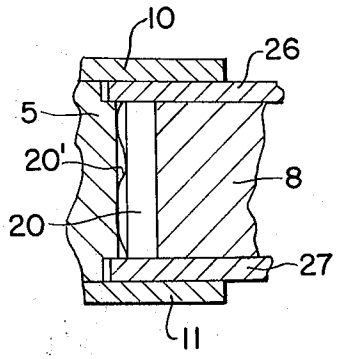

Fig. 2

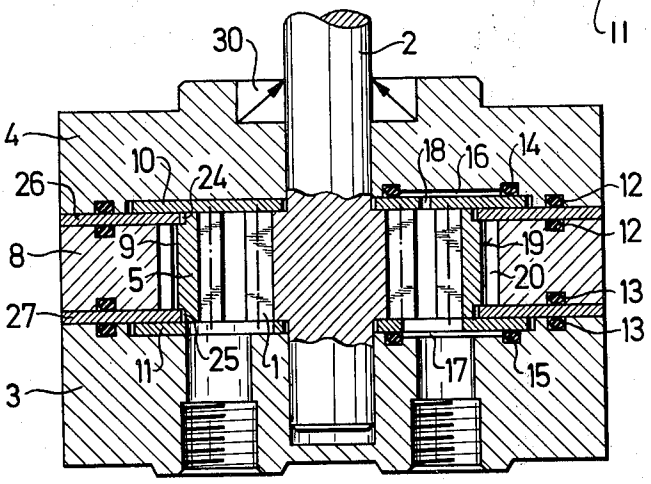

Fig. 3

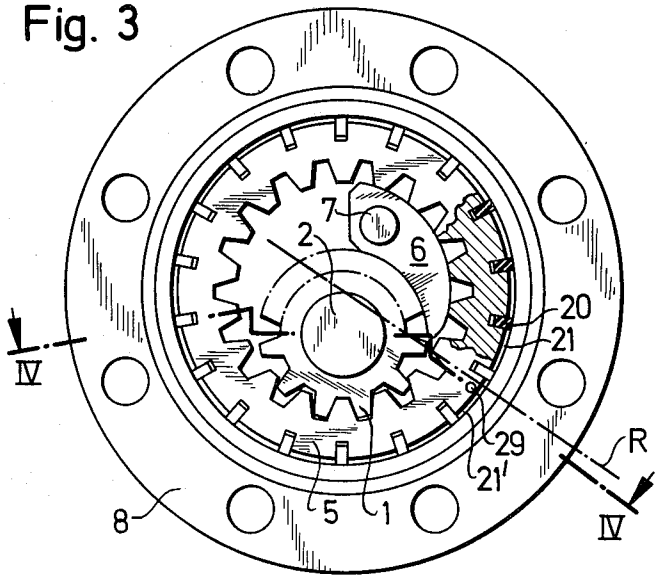

Fig. 5

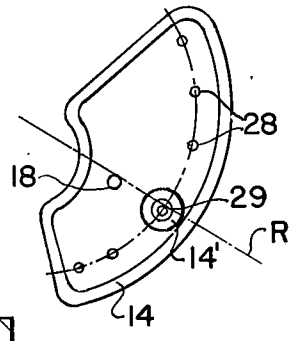

Fig. 4

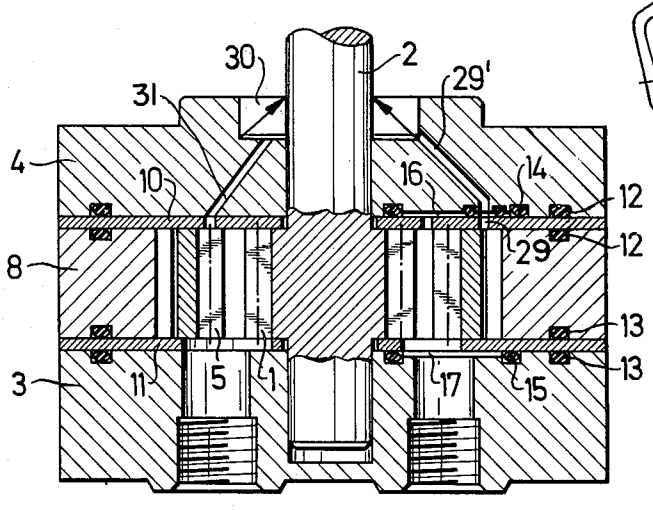

HIGH PRESSURE GEAR PUMP

BACKGROUND OF THE INVENTION

1. Field of the Invention

The present invention relates to high pressure gear pumps, and in particular to high pressure gear pumps having a drive pinion, a cooperating internal gear ring, and a filler wedge, and which are provided with means for axial and radial pressure compensation.

2. Description of the Prior Art

High pressure gear pumps having a drive pinion, a cooperating hydrostatically near-balanced internal gear ring, and a pivotable filler wedge between the approaching teeth are known. One such pump, disclosed in our U.S. Pat. No. 3,779,674, includes an axial pressure compensation means featuring one or two relatively thin metal plates between the gears and the pump housing, each plate being subjected to an axial compensation pressure field arranged in the housing. The radial pressure compensation means of this pump features one or several radial compensation pressure fields which are angularly delimited by transverse sealing members.

One disadvantage of this prior art device is related to the fact that the radial compensation pressure field requires either transverse grooves in the housing for the positioning of the sealing members, or a special nonrotating bearing ring with such transverse grooves. The result is a compensation pressure field of predetermined size and orientation opposing a pumping pressure field at the inner side of the gear ring of variable size and which is affected by the pressure acting in the transition zone between the suction side and pressure side and by the pressure propagation rate in the sealing zone which in turn depends upon such parameters as pressure, speed of rotation, viscosity of the pressure medium, fabricating tolerances, and the like.

SUMMARY OF THE INVENTION

It is a primary objective of the present invention to provide a high pressure gear pump of the earlier-mentioned type in which provision is made for a radial compensation pressure field whose size and orientation change in response to the changes in the pumping pressure field on the inside of the gear ring.

In order to attain the above objective, the invention suggests the provision of a compensation pressure field associated with each tooth gap, or with each tooth pitch, respectively, the former being arranged opposite the latter on the outer periphery of the internal gear ring, the effective area of the compensation pressure fields being larger in size than the opposing pumping pressure field on the inside of the gear ring.

In one embodiment of the invention the compensation pressure fields are delimited by transverse sealing members arranged on the outer periphery of the gear ring and received within grooves arranged between successive tooth gaps. These sealing members may be outwardly biased by means of compression springs. In cases where the internal gear ring is of a large diameter, the compensation pressure fields may be arranged directly in the gear ring itself, by providing circular recesses in the outer surface of the gear ring.

The feed channels for the compensation pressure fields are preferably arranged in the form of bores in the gear ring which are located between two successive sealing members. An alternative arrangement of the feed channels suggests bores or slits which are arranged inside the axial plates and which can be so arranged that one of the compensation pressure fields is in communication with the suction side of the pump. This particular pressure field, which is thereby rendered inactive, is preferably so oriented that it coincides approximately with the centerline of the radial hydraulic thrust acting on the gear ring. It also conveniently reduces the overall compensation pressure.

BRIEF DESCRIPTION OF THE DRAWINGS

Further special features and advantages of the invention will become apparent from the description following below, when taken together with the accompanying drawings which illustrate, by way of example, several embodiments of the invention, represented in the various figures as follows:

FIG. **1** is an elevational front view of a gear pump embodying the invention, the housing cover being removed;

FIG. **2** shows a modified gear pump in an axial cross section;

FIG. **2***a* shows an enlarged detail of FIG. **2**;

FIG. **3** shows a further embodiment of the invention in a representation similar to that of FIG. **1**;

FIG. **4** is a cross section through the pump of FIG. **3**, taken along line IV—IV thereof; and

FIG. **5** is a partial view of the inner face of a housing cover.

DESCRIPTION OF THE PREFERRED EMBODIMENTS

The various gear pumps illustrated in FIGS. **1**, **2** and **3** have essentially the same basic structure. As can be seen in FIGS. **1** and **2**, they comprise a pinion **1** which is solidary with the drive shaft **2**, the latter being journalled inside the housing covers **3** and **4**. An internal gear ring **5** cooperates with the pinion **1**, and between the two is arranged a filler wedge **6** which is pivotably retained relative to the covers **3** and **4** by means of a pivot pin **7**. The housing **8** surrounds the internal gear ring **5** with a small clearance **9**. Metal plates **10** and **11** are arranged on either side of the gears **1** and **5** (e.g. FIG. **2**) inside appropriate recesses in the respective housing covers.

The inner space of the gear pump is sealed off against the outside by means of two pairs of O-rings **12** and **13**. Smaller O-rings **14** and **15** define the axial compensation pressure fields **16** and **17**, respectively. The field **16** communicates with the pumping pressure field through a bore **18**, the field **17** is traversed by the pump outlet duct.

On the outer periphery of the internal gear ring **5** are arranged a number of regularly spaced transverse grooves **19** inside which are received sealing blades **20**. Two successive sealing blades define between them a compensation pressure field **21**. Between each field **21** and a corresponding tooth gap **23** extends a radial bore **22** through which the compensation pressure field **21** communicates with the pumping pressure field inside the internal gear ring **5**.

On account of the difference in circumferential spacing, due to the different diameters inside and outside of the internal gear ring **5**, the compensation pressure fields **21** are larger in area than the inner pumping pressure field. The internal gear ring **5** is therefore being

pressed against the filler wedge **6.** The resultant wear on the filler wedge allows the gear ring **5** to shift closer to the pump center until the outer surface of ring **5** comes into bearing contact with the bore of housing **8** on the opposite (i.e. suction) side of the pump. This condition means that the filler wedge wear is stopped and that the pump is fully run in. The sealing contact between the transverse sealing blades **20** and the housing bore is provided by the centrifugal forces acting on the blades. If necessary, these contact forces may be augmented by leaf springs **20'** arranged between the bottom of the grooves **19** and the sealing blades **20** (FIG. *2a*).

In the embodiment represented by FIG. **2,** the effective axial width of the compensation pressure fields **21** is reduced through the arrangement of recessed shoulders **24** and **25** on both sides of the internal gear ring **5.** The spaces created by the shoulders **24** and **25** are occupied by matching plates **26** and **27,** respectively. This reduction in the width of the fields **21** is intended to offset the greater angular length of the fields, so that the resultant bearing pressure between the gear ring **5** and the filler wedge **6** is not as high as in the pump of FIG. **1.** The earlier-mentioned bearing support between the gear ring **5** and the housing bore on the suction side, after running in of the pump, is therefore no longer necessary. However, it is necessary in this case to accurately match the thicknesses of the plates **10,** 11, 26 and **27** with the steps on the shoulders **24** and **25.**

In the pump embodiment as represented by FIGS. **3** and **4,** the compensation pressure fields **21** between the sealing blades **20** do not have their feed channels extending through the internal gear ring **5.** Here the channels are in the form of slits or bores **28** (FIGS. **4** and **5**) arranged in the axial plates **10** and/or **11** and they connect the radial compensation pressure fields **21** with the axial compensation pressure fields **16** and/or **17.** The earlier-mentioned need for offsetting the larger angular length of the fields **21** can in this case be conveniently met by neutralizing one of the radial compensation pressure fields, for example, field **21'** in FIG. **3,** by opening it to the suction side of the pump. This is accomplished by channels **29',** and **31** (FIG. **4**) with channel **29** sealed from the axial compensation pressure field **16,** as shown in FIGS. **4** and **5** by seal **14'.** The angular orientation of the neutralized field **21'** preferably coincides approximately with the centerline of the radial hydraulic thrust acting on the internal gear ring **5** which line is indicated at R in FIG. **3.**

To those skilled in the art it should be evident that this improved hydraulic gear pump can also be operated as a hydraulic motor.

It should be understood, of course, that the foregoing disclosure describes only preferred embodiments of the invention and that it is intended to cover all changes and modifications of these examples of the invention which fall within the scope of the appended claims.

We claim:

1. A high pressure gear pump comprising in combination:

a pump housing including an inlet and an outlet for the pressure medium, a main bore, and at least one removable cover;

a pinion and a drive shaft solidary therewith, the shaft being journalled in the housing;

an internal gear ring cooperating with the pinion so as to be driven thereby, the gear ring fitting inside the housing main bore with a small circumferential annular gap, which gap permits the gear ring to shift its position in relation to the pinion in response to wear;

an arcuate filler wedge arranged between the pinion and the internal gear ring in the space outside their tooth engagement, the narrowing portion of the wedge extending toward the point of tooth engagement, and the filler wedge being adjustable radially against the pinion under contact pressure from the gear ring;

a plurality of radially open grooves with parallel flanks arranged in the peripheral portion of the internal gear ring at regular angular intervals;

sealing blades arranged in said grooves, each sealing blade being slidably engaged between the groove flanks for radial adjustment motion into sealing contact with the wall of the housing main bore; the sealing blades thus defining a succession of enclosed rotating compensation pressure field spaces in the annular gap between the internal gear ring and the main bore; and

a plurality of pressure feed channels linking the pumping pressure field which is created by the merging gear teeth with the annular gap in that portion of its circumference which is located radially outside the pumping pressure field, thereby pressurizing the rotating field spaces while they are moving through said circumference portion, so as to create a radially inwardly directed pressure compensation force on the internal gear ring in opposition to and greater than the radially outwardly directed thrust which is exerted on the gear ring by the pumping pressure field.

2. A gear pump as defined in claim **1,** wherein:

each sealing blade is radially outwardly biased by means of a spring arranged inside its guide groove.

3. A gear pump as defined in claim **1,** wherein:

the number of compensation pressure field spaces on the periphery of the internal gear ring is identical to the number of teeth on said gear.

4. A gear pump as defined in claim **2,** wherein:

the axial width of the radial compensation pressure field spaces is less than the axial width of the pumping pressure field, in order to partially offset the greater total peripheral length of the pressurized rotating field spaces, as compared to the peripheral length of the pumping pressure field;

the internal gear ring has on at least one side an angular shoulder recess; and

the housing includes a matching spacer plate occupying the space of the shoulder recess, thereby cooperating with a planar portion of the shoulder so as to define said reduced axial width for the pressure field spaces in the annular gap between the gear ring periphery and the housing bore.

5. A gear pump as defined in claim **3,** wherein:

said field spaces are arranged radially outside the tooth gaps of the gear ring; and

the pressure feed channels are radial bores linking each tooth gap with a field space.

6. A gear pump as defined in claim **3,** further comprising:

an axial sealing plate arranged on at least one side of the gears, the sealing plate being yieldingly confined between the gears and the housing; and

an axial pressure compensation field defined between the sealing plate and the housing and communicating with the pumping pressure field between the merging gear teeth so as to create an axially inwardly directed compensation force in opposition to and greater than the axially outwardly directed thrust which is exerted on the sealing plate by the pumping pressure field; and wherein:

the sealing blades on the periphery of the internal gear ring extend axially into sealing contact with the axial sealing plate; and

the pressure feed channels for radial pressure compensation extend through the axial sealing plate, so as to link said annular gap within the indicated circumference portion with the pumping pressure field, via the axial compensation pressure field.

7. A gear pump as defined in claim **6,** wherein:

a short circumference portion located within said longer circumference portion in which the rotating field spaces are pressurized is provided without a pressure feed channel;

the pump housing further includes a pressure neutralizing channel leading from the suction side of the pump to the annular gap in the short circumference portion, so as to neutralize its pressure; and

the neutralized, short circumference portion is angularly oriented to approximately coincide with the centerline of the radial hydraulic thrust which is exerted by the pumping pressure field.

8. A gear pump as defined in claim **7,** wherein:

the pressure neutralizing channel is located angularly between the pressure feed channels and extends axially across the axial compensation pressure field, but without communicating therewith.

* * * * *