Feb. 7, 1939. O. M. DUNNING 2,146,425

PHONOGRAPHIC SYSTEM

Filed March 21, 1936 2 Sheets-Sheet 1

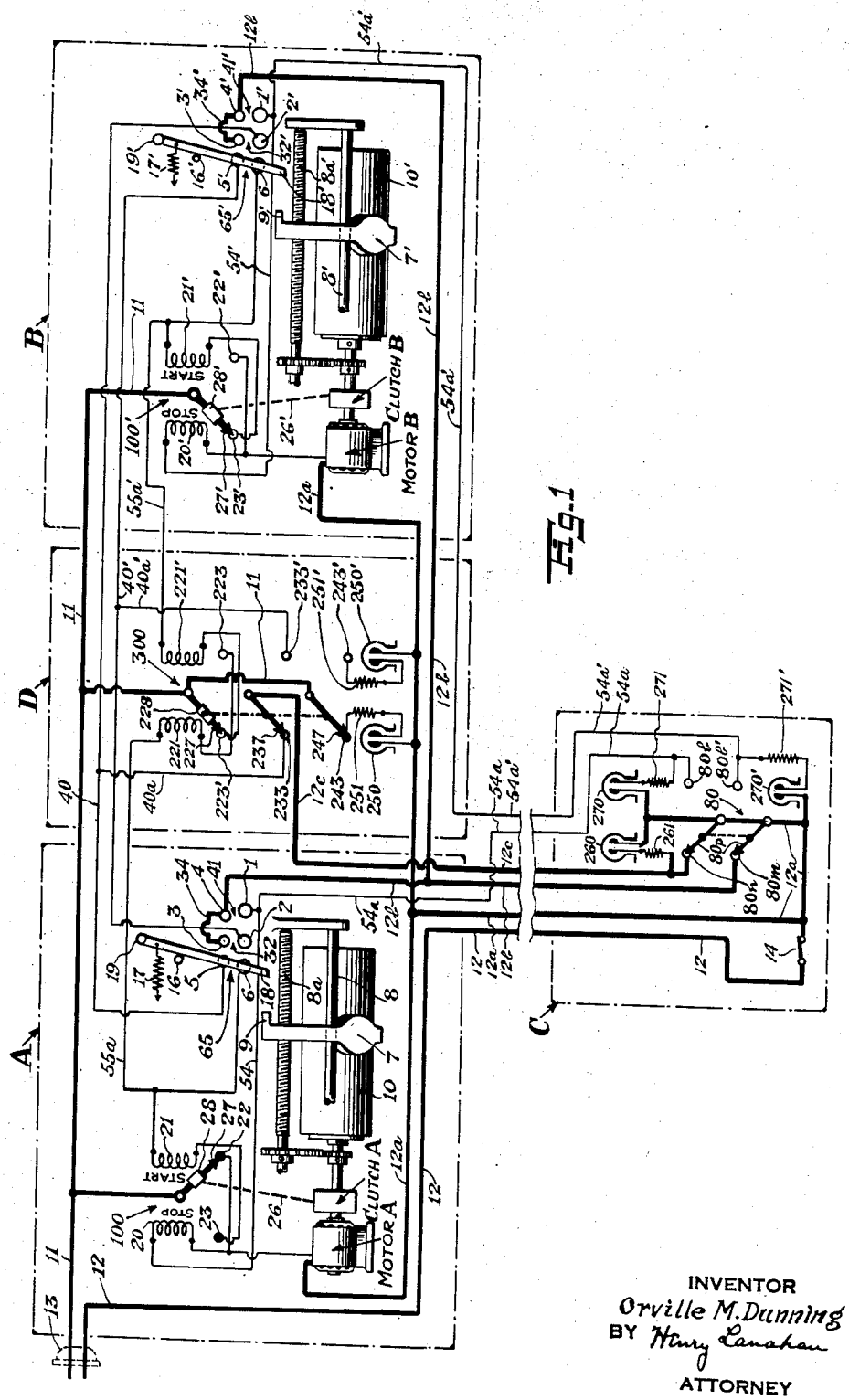

Fig. 1

INVENTOR
Orville M. Dunning
BY Henry Lanahan
ATTORNEY

Feb. 7, 1939. O. M. DUNNING 2,146,425

PHONOGRAPHIC SYSTEM

Filed March 21, 1936 2 Sheets-Sheet 2

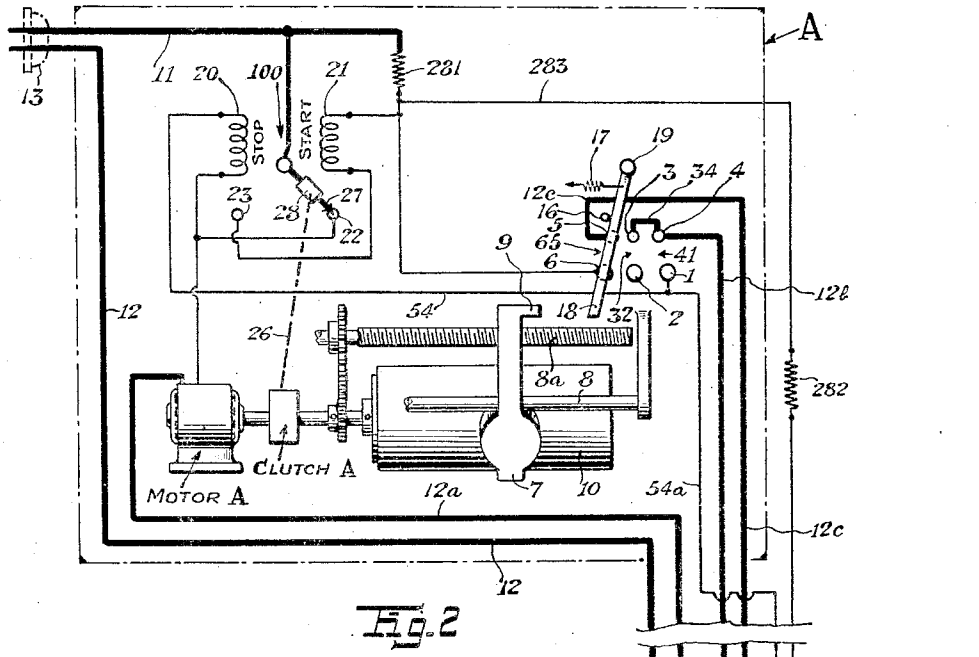

Fig. 2

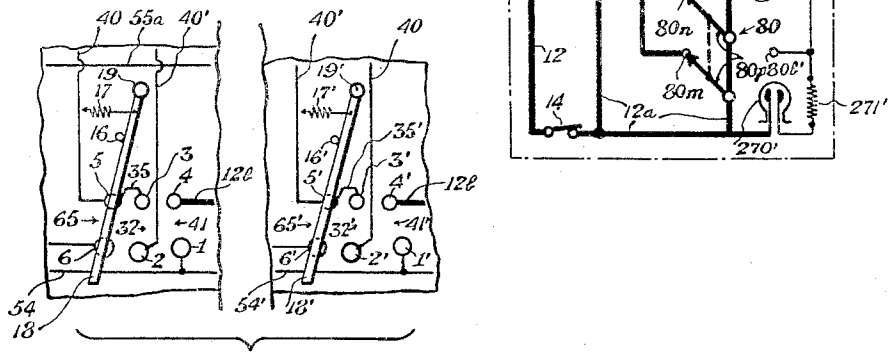

Fig. 1a

INVENTOR
Orville M. Dunning
BY *Henry Lanahan*
ATTORNEY

Patented Feb. 7, 1939 2,146,425

UNITED STATES PATENT OFFICE

2,146,425

PHONOGRAPHIC SYSTEM

Orville M. Dunning, Glen Ridge, N. J., assignor to Thomas A. Edison, Incorporated, West Orange, N. J., a corporation of New Jersey

Application March 21, 1936, Serial No. 70,042

14 Claims. (Cl. 274—18)

This invention relates to phonographic systems, and more particularly to means and methods for controlling the operation thereof. While not in all aspects limited thereto, the invention has particular reference to systems comprising a plurality of phonographs adapted for alternate, or sequential, operation to provide uninterrupted recordation of continuing matter.

In the co-opending application of myself and Richard M. Somers, Serial No. 24,238, filed May 31, 1935, on which Patent Number 2,075,978 has now been issued, there have been disclosed control means for such systems—operable when desired at a point remote from the phonographs proper, an attendant then for example successively supplying the phonographs with fresh records and restoring them to recordation initiation conditions, as required. The instant invention comprises among other things improvements on, and simplified alternatives to, the control means disclosed in that application. Thus for example one characteristic of the conrol means disclosed in that application was the provision in the control station of a respective starting switch for each phonograph of the plurality; a feature of the instant invention is the elimination of the requirement for a plurality of starting switches, and the selection of the appropriate phonograph for starting at any time as a purely automatic function.

Another feature of the instant invention comprises a mutual connection for a plurality of phonographs and associated control station, which by mere simplification and with minor alteration becomes adapted for the efficient control of a single phonograph—permitting a high degree of standardization of equipment for both plural and single phonograph installations.

Still another feature of the invention deals with simple, effective, and in each case appropriate signalling at both the control station and at the phonographs themselves of the condition of the system.

It is an object of the invention to improve the operation of systems of the class described.

It is another object to simplify the control means for such systems.

It is another object to render automatic the starting of an appropriate one of the phonographs when such a system is first placed in operation.

It is another object to provide, in a system of sequentially operable plural phonographs, improved and simplified means for starting the phonographs in appropriate order, particularly in the first instance.

It is another object to provide, in such a system having individual starting means for the several phonographs, improved and simplified actuating circuits for said means.

It is another object to facilitate the apt manipulation or servicing of the phonographs by the attendant.

It is another object to provide simplified and improved arrangements for indicating to the user (e. g., to one whose dictation is being thereby recorded) the condition of the system.

It is another object to provide generally improved and simplified indicating means for a system of the class described.

A further object is to provide a control station interchangeably adapted for use with single and plural phonograph systems.

Other and allied objects will more fully appear from the following description and the appended claims.

In the description reference is had to the accompanying drawings, of which:

Figure 1 is a schematic diagram of a system of two phonographs and control station therefor according to my invention;

Figure 1*a* is a fractional diagram of an alternative connection for certain switch means in each phonograph, the two parts of the figure being intended for optional substitution for the respectively corresponding portions of Figure 1; and

Figure 2 is a schematic diagram of a single phonograph system, illustrating the use therein of the same control station as shown in Figure 1, and of essentially unaltered internal phonograph wiring.

Reference is first invited to Figure 1, wherein have been illustrated the plurality of phonographs comprising phonographs A and B, the control station C, and the phonograph coupling unit D. The phonographs proper may first be described, with particular reference to phonograph A; it will be understood that phonograph B is mechanically similar, its illustrated components having been designated with numbers similar to those for the corresponding components of phonograph A, excepting that they have been furnished with prime marks. Each phonograph may comprise for example a mandrel **10** adapted to carry a cylindrical record; a sound box **7** adapted to record on and/or reproduce from such a record and adapted to be driven longitudinally thereof as along a guide **8** by means of feed screw **8***a*; a motor suitably arranged to produce rotational movement of the mandrel and longitudinal movement (in a right-hand direction as illustrated) of the sound box; and optionally a clutch interposed

between the motor and the parts thereby moved. The sound boxes may be of any known variety, as may also the means for energizing the same—not shown herein because forming no part of the instant invention.

The supply of current for the entire system may be derived from any suitable supply line as through the plug 13, rendering at respectively opposite line potentials the conductors 11 and 12. The conductor 12 has been shown leading only to the main line switch 14 in the control station C, to the other side of which is connected the conductor 12a leading from the control station into each phonograph; the conductor 12a is of course invested with the potential of conductor 12 when the switch 14 is closed, which will be assumed throughout the balance of the description. There is also provided in the control station a switching device in the form of a double-pole, double-throw switch 80; this is hereinafter more particularly referred to, but it may at this point be mentioned that during normal operation of the system this device is in the left-thrown position with poles 80p touching contacts 80m and 80n as shown, investing with the same potential as conductors 12 and 12a the conductor 12b leading from the contact 80m into both phonographs, and the conductor 12c leading from the contact 80n into the coupling unit D. For convenience these have been shown in heavy lines conductors 11 and 12, and all conductors 12a, 12b, 12c connected to the latter when both switch 14 is closed and switching device 80 is leftwardly thrown.

In each phonograph the immediate device for controlling its operation and non-operation is a control member, for example an arm 27, responsive to a magnet assembly 100. This assembly may comprise a pair of stop and start electromagnets 20 and 21, respectively, the control arm being responsive in its position to the last actuated of the two magnets; preferably the magnet assembly has associated therewith a switch arranged upon each control arm response to open-circuit the magnet to which the response has occurred. A variety of systems are obviously available for the control arm, magnet assembly and switch; but I have preferred to employ for this purpose, and have schematically illustrated, a system which is in accordance with the teachings of U. S. Letters Patent to Langley, No. 1,380,486, issued June 7, 1921. Herein the control arm 27 comprises an armature portion 28 arranged for alternate attraction by the magnets; and the switch conveniently includes the control arm itself as a pole, connected to conductor 11, and a pair of contacts 22 and 23 respectively in series with the stop and start magnets 20 and 21, the control arm having two possible positions only—i. e., touching one or the other of the contacts. The actuation of each magnet is effected through the switch; and it will be seen that the contacts are so arranged that the control arm comes to a position touching one (e. g., in phonograph A, touching contact 22, in series with stop magnet 20) in response to actuation of the respectively opposite magnet (e. g., start magnet 21), the latter magnet being thereby open-circuited at its series contact (e. g., 23). This arrangement, wherein each magnet upon actuation both throws the control arm and open-circuits itself, has among its distinct advantages those of obviating wasteful and excessively heating continuations of current flow through the magnet, and of enforcing a strictly alternate actuation of the two magnets.

Each phonograph is of course intended to operate only when its start magnet 21 or 21' has last been actuated, and its contact 22 or 22' is therefore connected with conductor 11 by the control arm (e. g., that arm is in its "run" position, as has been illustrated in phonograph A). When operation and non-operation of each phonograph is to be effected by making and breaking the connection of the motor to one of the line potential conductors (e. g., 11 or 12a), the performance of this function by the control arm is readily caused by the simple connection of the motor in each phonograph from the conductor 12a to the contact 22 or 22' therein. A clutch control of operation and non-operation has also been illustrated in each phonograph and may be employed additionally to the making and breaking of the motor circuit, or alternatively thereto (the motors then being permissibly connected directly between conductors 12a and 11). The illustration of this clutch control consists in the schematically indicated levers 26 and 26' respectively connecting the control arms 27 and 27' with the corresponding clutches; when the control arm and hence the lever are to the left (as shown in phonograph B) the clutch will be understood to be disengaged, and when to the right (as in phonograph A) the clutch will be understood to be engaged.

The operation control devices, or control arms and magnet assemblies, immediately included in each phonograph having thus been described, attention may be directed to the control means by which those devices are appropriately actuated. In most general organization, these control means are similar to those disclosed in the co-pending application above referred to, comprising a system of starting and stopping circuits respectively including the several magnets, these circuits extending between the several phonographs and being arranged to be closed (and thus to actuate the respectively included magnets) automatically in accordance with sound box positions in the several phonographs; together with a control station switching device which may be manipulated either to energize this automatic system so that it will maintain itself in operation as stated, or to actuate directly all the stop magnets so that operation of the entire system is stopped. (It will be understood that in this application I use the term "energization" of a circuit, or of the automatic system of circuits, to denote the appropriate supply thereto of a potential capable of actuating the included magnet; not to denote the actual actuation of that magnet, which of course requires in addition the closing of the circuit.) The control means of the instant invention differ most significantly from those of the mentioned co-pending disclosure in respect of the structure by and manner in which the automatic system is placed in operation when first energized, as will hereinafter appear.

Before describing the automatic system of starting and stopping circuits it is convenient to describe the switching means in each phonograph which form portions of those circuits, and cause them to close at the proper times in accordance with sound box positions; such description is conveniently presented with reference to phonograph A, wherein will be seen in succession the three pairs of contacts 5—6, 3—2, and 4—1. Each pair may be arranged in radial alignment with a pivot point 19; pivoted to this point is an arm 18 whose function is to connect together that pair of contacts over which it is

positioned. Considering the pair of contacts 5—6 to form a switch 65, the pair 3—2 to form a switch 32, and the pair 4—1 to form a switch 41, one may say that the arm 18 alternately closes these three switches. The circumferential spacing of the pair of contacts 3—2 from the pair 5—6 is preferably as little as possible more than sufficient to preclude the arm 18 from simultaneously touching contacts of those two pairs, while the spacing of the pair 4—1 from the pair 3—2 may if desired be liberally greater. The arm 18 is biased, as by spring 17, to leftward movement (i. e., toward the extreme contact pair 6—5), but by stop 16 is limited as to such movement to a position over that pair; thus normally the switch 65 is closed, while the switches 32 and 41 are open. The arm 18 rests in this position when the sound box 7 is at its left-hand (or initial) travel limit, and throughout most of its rightward travel; as the terminal travel limit is approached, however, a projection 9 (provided for this purpose on the sound box) impinges against the arm 18, and further sound box travel moves the arm 18 rightwardly first to open switch 65 and close switch 32, then to open switch 32, and finally to close switch 41. Corresponding switch means, sound box projection, etc. are of course provided in phonograph B, their designating numerals being provided with prime marks.

The immediate description of the three switches in each one phonograph may be completed by a brief consideration of their immediate functions, with reference for convenience to phonograph A. Switch 32 forms a "successive" starting switch—i. e., for the next phonograph B, its contact 2 being connected by conductor 40' with phonograph B contact 5'—and is closed for a short interval when the phonograph A sound box 7 is near but not quite at its terminal travel limit. Switch 41 forms a "self-stopping" switch for phonograph A, its contact 1 being connected by conductor 54 to the non-contact extremity of the phonograph A stop magnet 20; it is closed as the sound box reaches its terminal travel limit, but sufficiently after the next phonograph has been started by the switch 32 to afford a slight overlap of recordation by the two phonographs. Switch 65 forms a "protective" switch for phonograph A, its contact 6 being connected in series with the non-contact extremity of the phonograph A start magnet 21; it remains closed until just before switch 32 is closed, being termed "protective" because it precludes abortive starting of phonograph A when the sound box 7 is near or at its terminal travel limit—a starting which not only is useless but also, with certain sound box positions in phonograph B, may give rise to a sustained "run-stop" oscillation of the control arms of the two machines. The connections outlined in this paragraph for phonograph A are of course duplicated for phonograph B, with appropriate priming or unpriming of the designating numerals.

In the automatic system attention is first conveniently directed to the stopping circuits for the several phonographs; all of these are simultaneously energized when the station switching device 80 is thrown to the left as shown, investing with the conductor 12 potential the conductor 12b. The latter conductor is seen to be connected to the contacts 4 and 4' in the two phonographs. The stopping circuit for phonograph A may thus be traced from conductor 12b through self-stopping switch 41, conductor 54, stop magnet 20, contact 22 and control arm 27 to conductor 11; and an entirely analogous stopping circuit will be seen in phonograph B.

Consideration may now be given to the starting circuits, attention being first invited to the fact that in Figure 1 the contacts 3 and 3' have been shown connected by the respective jumpers 34 and 34' to the respective contacts 4 and 4' and thus both to the conductor 12b—which with switching device 80 leftwardly thrown is invested with conductor 12 potential. The starting circuit for phonograph A may be traced from the contact 3' in phonograph B through the successive starting switch 32' and the conductor 40 to contact 5 in phonograph A, and in the latter phonograph through the protective switch 65, start magnet 21, contact 23 and arm 27 to conductor 11. Conversely the starting circuit for phonograph B may be traced from the contact 3 in phonograph A through the successive starting switch 32 and the conductor 40' to contact 5' in phonograph B, and in the latter phonograph through the protective switch 65', start magnet 21', contact 23' and arm 27' to conductor 11.

At this point it is convenient to describe the manner in which the automatic system of circuits, as so far set forth, operates after having been placed in operation—a manner which will be seen to be in general similar to that of the automatic system of the mentioned co-pending application. Let it be assumed that the phonograph A is in operation, with its sound box at some intermediate point in its rightward travel; and that the phonograph B is out of, but in readiness for, operation—i. e., has its sound box at its initial or leftward travel limit and has a fresh record inserted upon its mandrel. Since the phonograph A is in operation, its control arm 27 is of course in its "run" position, completing its motor circuit and placing the stop magnet 20 in condition for next actuation. In phonograph B, out of operation, the arm 27' has last been attracted by the stop magnet 20' to occupy its "stop" position, placing the start magnet 21' in condition for next actuation. These conditions are those illustrated in Figure 1.

When the sound box projection 9 of the now operating phonograph A impinges against the arm 18, the protective switch 65 first opens—precluding the subsequent actuation of the phonograph A start magnet 21 until the sound box 7 has been manually moved leftwardly. Upon negligible further travel of the sound box 7 the arm 18 will have been moved sufficiently to close the successive starting switch 32; this closes the phonograph B starting circuit (the phonograph B protective switch 65' being in its normal closed condition), actuating the phonograph B start magnet 21' and moving the control arm 27' to its "run" position touching contact 22'; this places the phonograph B in operation. For a brief interval at this juncture both phonographs will be operating, so that a slight overlap of the recordations by the two phonographs will be effected. Slight further travel of the phonograph A sound box 7 will open the successive starting switch 32 and thus the starting circuit of phonograph B; but this is of no significance, since that starting circuit is already open at contact 23'. Still further slight travel of the phonograph A sound box 7 closes the self-stopping switch 41, closing the phonograph A stopping circuit, actuating the stop magnet 20, and moving the control arm 27 to its "stop" position touching con-

tact 23; this places the phonograph A out of operation. Before the phonograph B sound box 7' approaches the arm 18' the phonograph A sound box 7 may be manually moved leftwardly to the beginning of its path of travel, and a fresh record inserted upon mandrel 10.

The conditions of the two phonographs as to operation and component positions will now be seen to be quite reversed from those assumed at the beginning of the preceding paragraph; and the operations of that paragraph are accordingly repeated, but in each case as to the respectively opposite phonograph and components. And upon completion of these operations as to phonograph and components, the operations precisely as described in the preceding paragraph are repeated; and so on, in an automatic progression which will be unbroken except by the failure to restore one of the sound boxes leftwardly to the beginning of its travel path during the travel of the other sound box. In the event of failure so to restore the sound box of either phonograph, the closing of its starting circuit (by the closing of the successive starting switch 32 or 32' on the opposite phonograph) is prevented by the open condition of its own protective switch 65' or 65, and upon the stopping of the opposite phonograph the entire system will be out of operation, with both arms 27 and 27' in their "stop" positions.

The continued operation of the automatic system having been so described, attention may be directed to the arrangements by which that operation is stopped at will. These are comprised in the station switching means 80, being the right-shown contacts 80*b* and 80*b*' thereof (illustrated as open). These are respectively connected by the conductors 54*a* and 54*a*' to the respective contacts 1 and 1' and respective conductors 54 and 54'. When the station switching means 80 is thrown from left-shown to right-shown position—i. e., from contacts 80*m*—80*n* to the contacts 80*b*—80*b*'—the automatic system is disconnected from conductor 12*a* and thus deenergized; and the conductors (54, 54') leading to all the stop magnets (20, 20') are connected to conductor 12*a*, thus applying an energizing potential directly to those magnets and actuating them all. This places all the control arms (27, 27') in their "stop" positions, and the entire system thus out of operation.

A very important feature of the instant invention deals with the arrangements for putting the automatic system into operation in response merely to leftward throwing of the station switching device 80; this throwing of course causes the application to the automatic system of conductor 12 potential, thus energizing that system. With that system as so far described, however, this would not result in starting of either phonograph —for, while each starting circuit is closed at its contact 23 or 23' by the respective control arm (27, 27') and (assuming both phonographs in readiness for operation with sound boxes not near their terminal travel limits) at its protective switch (65, 65'), it is isolated from the energizing potential of conductor 12 by the open condition of its respective successive starting switch (32', 32). It is therefore necessary upon leftward throwing of the station switching device 80 additionally to apply conductor 12 potential to one of the starting circuits at such a point that that circuit shall immediately operate—i. e., on the contact 2' or 2 side of the successive starting switch located on the opposite phonograph—or in other words to apply conductor 12 potential to one of the start magnets for immediate actuation thereof; this potential application must of course be restricted to one only of these circuits or magnets. In the disclosure of the co-pending application this restriction was observed by effecting this potential application through some single one of a plurality of thereto provided extra switches in the control station, respectively corresponding to the several phonographs. According to the instant invention, however, this restricted application is effected, upon mere leftward throwing of switching device 80, by an automatic selecting device which may be considered as coupling the two phonographs together and conveniently forming the principal component of the coupling unit D.

This device is shown as a selector relay 300, which may structurally be entirely similar to each of the magnet assemblies 100 and 100' of the respective phonographs, excepting that it is provided with two additional arms and sets of therewith co-operating contacts. The two magnets of the relay, designated as 221 and 221', have their non-contact extremities respectively connected by the respective conductors 55*a* and 55*a*' to the non-contact extremities of the start magnets 21 and 21', and may respectively be termed the "A" and "B" magnets of the relay. In series with these magnets respectively are the contacts 223 and 223'; the arm 227 is provided, electrically connected with the conductor 11 and mechanically carrying the magnet-responsive armature 228; and, analogously to the control arms in the before-described magnet assemblies, the arm 227 comes into a position touching one of the contacts (e. g., its "A" position as illustrated, touching contact 223') in response to actuation of the magnet not connected to that contact (e. g., the "A" magnet 221), thereby open-circuiting the latter magnet at its own series contact (e. g., 223). The additional arms are designated as 237 and 247, respectively, and their sets of co-operating contacts as 233—233' and 243—243', respectively; the additional arms are mechanically linked to the arm 227 to move in accordance with the movement of that arm. The relay arm 247 and its contacts 243—243' perform an auxiliary function hereinafter discussed. The relay arm 237 is connected to the conductor 12c (which with station switching device 80 leftwardly thrown is invested with conductor 12 potential), and the contacts 233 and 233' co-operating with that arm are respectively connected by the conductors 40*a* and 40*a*' to the respective conductors 40 and 40'—which will be recognized as intermediate points in the phonograph A and phonograph B starting circuits inside of the respective successive starting switches (32' and 32) for those circuits. It may be considered that, with switching device 80 leftwardly thrown, the switches formed by arm 237 with contact 233 and by the same arm with contact 233' are respectively in parallel with those successive starting switches (32' and 32, for phonograph A and B starting circuits respectively).

The arm 237 and contacts last mentioned are those which perform the primary relay function of causing, upon leftward throwing of switching device 80, an immediately effective conductor 12 potential application to one only of the starting circuits. The function of the arm 227, with its contacts and the magnet assembly 300, is to determine to which of the starting circuits this application takes place. The "A" and "B" relay magnets being connected to the start magnets of the

A and B phonographs, respectively, the arm 227 will occupy its "A" or "B" position according to whether the phonograph A or phonograph B start magnet has last been actuated. This may readily be proven by considering what happens when for example the phonograph A start magnet 21 is actuated: if (as in the normal case) the arm 227 has theretofore been occupying its "B" position, the "A" relay magnet 221 is by arm 227 connected to conductor 11 (or in parallel with the magnet 21, then also connected to 11) and will be actuated simultaneously with magnet 21 and thus come to its "A" position; while if for any reason the arm 227 might theretofore already have been occupying its "A" position, the "A" relay magnet coil is open-circuited at its series contact 223 and the arm 227 will remain in "A" position throughout the actuation of magnet 21, thus establishing the prescribed relationship. This prescribed position of arm 227 in correspondence with that start magnet which has last been actuated is not disturbed by rightward throwing of switching device 80 to actuate all the stop magnets and stop the system; and accordingly at the instant of leftward throwing of switching device 80 to start the system the relay arm 227 will still occupy the same position. The arrangement of the contacts 233 and 233' is such that when arm 227 is in its "A" position the conductor 12 potential application will occur to the phonograph A starting circuit conductor 40, and that when arm 227 is in its "B" position the application will occur to the B starting circuit conductor 40'; this arrangement comprises the illustrated placement of the unprimed contact 233 to be touched by arm 237 when the primed contact 223' is touched by arm 227.

With this arrangement, if the system has been stopped by the throwing of switching device 80 in the middle of recordation upon one phonograph, it will be that phonograph of which operation will be resumed upon re-throwing of that device, irrespective of whether the sound box thereof remains in the position wherein it stopped or has been restored to its left-hand position (as because of fresh record insertion). If at the time of such stopping of the system a first of the phonographs had proceeded to or beyond the point where it had started the second, whether or not the first had yet stopped itself, and assuming the second not yet to have opened up its protective switch, the operation resumption upon manipulation of device 80 will, entirely acceptably, be of the second phonograph only. If both phonographs have opened their protective switches (by virtue of at least substantially completed sound box travel in each), neither, entirely acceptably, will start unless the attendant has after both those switch openings restored leftwardly the sound box of at least that one phonograph which was last in operation, in which event that one will start. In the sole event that the last operating phonograph has been stopped with its end switch arm 18 (or 18') in a position intermediate contacts 6—5 (or 6'—5') and 3—2 (or 3'—2')—i. e., having opened the protective switch 65 (or 65') without yet having closed the successive starting switch 32 (or 32')—will there be a failure of the system automatically to restart upon leftward throwing of device 80; possibilities of this are rendered utterly negligible by as close a spacing of those respective contacts as is consistent with certainty of non-bridging thereof by the arm 18 (or 18').

It will be understood that in general, the presence in circuit of the selector relay, as above described, does not affect the operation of the automatic system of starting and stopping circuits throughout the continued energization of that system. For, as the magnet (21, 21') in the starting circuit of either phonograph is actuated by closing of the successive starting switch in that circuit, the selector relay is thrown so that its application of conductor 12 potential occurs into that circuit—which circuit, so long as there occurs neither the closing of another successive starting switch (with re-throwing of the relay) or de-energization of the automatic system (by switching device 80), has been opened and remains open at its start magnet series contact (23, 23'), and is therefore unresponsive to the relay.

As illustrated in Figure 1, when switching device 80 is leftwardly thrown both contacts 3 and 3' are rendered at conductor 12 potential, this energizing (though of course not in itself causing the functioning of) all the starting circuits. It is not necessary, however, that all the starting circuits remain energized throughout the period during which device 80 remains so thrown—it is obviously sufficient that there be energized at any time that one of the starting circuits which is next to function. But it has been shown above that with the illustrated arrangements the arm 237 causes conductor 12 potential application to the conductor 40 or 40' of the starting circuit of that phonograph (A or B, respectively) which is next to operate. Accordingly the energization of the starting circuits, instead of being continuous for all throughout the mentioned period, may if desired be alternately and selectively effected through the arm 237 and conductors 40 and 40'. This has been illustrated in the fractional Figure 1*a*, whose two portions illustrate for the respective phonographs the sound box-operated switching means (e. g., switches 65, 32, 41) and immediately associated wiring. Herein it will be seen that jumpers 35 and 35' connect the respective contacts 3 and 3' to the respective contacts 5 and 5'—and thus to the respective conductors 40 and 40'. Jumpers 35 and 35' thus replace the jumpers 34 and 34' of Figure 1, which are in this case omitted.

For intelligent operation of any system of the nature herein dealt with, there is highly desirable the provision of indicating means whereby the dictator may be apprised of the condition of the phonographs—and preferably also whereby the attendant may be guided in his attention to the phonographs. The indicating means must be equally responsive to operations performed at the control station and those performed by the automatic system; they are preferably of such a form and so included in the system that they do not require additional conductors between the phonographs and the control station, or other material complication of the system wiring; and their circuits should in any event be largely integral with the operating circuits of the system to minimize chances of either failing without the other—i. e., to maximize the dependability of the indications. My invention comprises indicating means which nicely meet this specification.

Attention may now be directed to the indicating means illustrated in Figure 1; these comprise a portion in association with the phonographs proper for the benefit of the attendant, and a portion in the control station C for the benefit of the dictator. The first of these portions is conveniently carried on the coupling unit D, and comprises a plurality of pilot lamps—one for each of the phonographs—illustrated as 250 and 250'. These lamps may conveniently be of the gas dis-

charge (e. g. neon) type; and in that event of course require series current-limiting means, which have been illustrated as the resistances 251, 251'. The lamps are arranged so that a respective one thereof will be lit whenever the thereto corresponding phonograph is operating (excepting in that small last portion of its operation after it has started the other phonograph); and so that, when neither phonograph is operating, there will be lit that one lamp which corresponds to the phonograph which will next operate. This latter indication is of particular value to the attendant; for example, in case each phonograph requires manipulation (e. g., fresh record insertion, etc.) by him, he is by this indication enabled with maximum dispatch to perform that part of the required manipulations which is necessary to the immediate resumption of system operation—i. e., the manipulation of that machine of which operation will first be resumed. The arrangement of the lamps 250, 250' to perform these functions is readily carried out by connecting them between the conductor 12a and the contacts 243, 243' cooperating with the third pole or arm 247 of the selector relay, which arm will be connected to conductor 11. With the system as described, the arrangement of the lamps and contacts should be such that the lamp 250 for phonograph A will be lit when the relay arm 227 occupies its "A" position, and so on.

The other portion of the indicating means may comprise three lamps—conveniently of similar type and each in that case with series resistance designated with a number greater by 1 than the respective lamp—in the control station. One of these lamps—which may be termed a "stand-by" pilot—is designated as 260 and is shunted between the switching device poles 80p (i. e. conductor 12a) and contact 80n (i. e., conductor 12c). It will be obvious that when switching device 80 is leftwardly thrown (for operation of the phonographs) this lamp will be short-circuited and therefore unlit. While device 80 remains rightwardly thrown (and the system thus out of operation) this lamp will be lit—provided the system is in condition to resume operation upon leftward throwing of device 80. This proviso is enforced by the fact that the circuit for current for the lamp from conductor 11 to the conductor 12c lies through the control arm (e. g., 27), start magnet series contact (e. g., 23), start magnet (e. g., 21), protective switch (e. g., 65), and starting circuit conductor (e. g., 40) of that phonograph which is next to start—or in other words is co-extensive with substantially the entire starting circuit of that phonograph. Any condition in this co-extensive portion which would defeat starting upon leftward throwing of device 80—for example, an open condition of the protective switch therein—will open the current circuit for the stand-by pilot lamp and prevent its lighting; this gives the dictator an especially positive indication of the availability of the system for assured starting at his will.

The other two indicating lamps in the control station are designated as 270 and 270'—or phonograph A and phonograph B pilot lamps respectively—and are shunted from the respective contacts 80b and 80b' (i. e., from the respective conductors 54a and 54a' to the poles 80p (i. e., conductor 12a)); thus both will be extinguished whenever switching device 80 is rightwardly thrown (and the system thus out of operation). When that switching device is leftwardly thrown (for operation of the phonographs) each of the lamps 270 and 270' will be lit whenever its phonograph is operating—i. e., the mandrel of its phonograph turning. This results from the fact that the current circuit for each from conductor 11 to the conductor 54a or 54a' passes through the respective control arm 27 or 27', stop magnet 20 or 20', and conductor 54 or 54'—or, in other words, is co-extensive with that portion of the stopping circuit for the respective phonograph which is always closed (and in readiness for completion of circuit closing at the respective self-stopping switch 41 or 41') when that phonograph is operating. From still another point of view, when the illustrated connection of the motors to the respective stop magnet series contacts 22 and 22' is followed, the lamps 270 and 270' are connected through the respective stop magnets 20 and 20' immediately in parallel with the respective motors. Analogously to the case of the stand-by pilot, the circuit arrangements for the phonograph pilots—wherein their currents are drawn through portions of respective circuits of the automatic system (including certain respective magnets)—obviously result in especially positive indications to the dictator of the operation or non-operation of the respective phonographs.

It will of course be understood that with the illustrated arrangements of stand-by and phonograph pilot lamps to draw current through certain magnets of the magnet assemblies 100 and 100', it is important that the current drawn by the lamps be dependably less than that required to actuate those magnets. This specification is of course readily met with the preferred and illustrated gas discharge lamps, with series resistance which may be in value of the order of several tens of thousands of ohms.

One of the features of the arrangement of phonograph A and control station C in Figure 1 is the preservation of their utility for use, with minimum wiring revision, without further phonographs (e. g., B) and coupling unit D, to form a remotely controllable single phonograph system; their use in such capacity has been illustrated in Figure 2. Herein it will be seen that the control station C, as to both its several components and its internal wiring, is quite identical with that of Figure 1. As to components the phonograph A of Figure 2 is quite identical with that of Figure 1, excepting that there is desirably additionally included therein a high resistance 281 shunted from the non-contact extremity of start magnet 21 to conductor 11 for a purpose which will hereinafter be apparent. (Note is here made that for purposes of greatest interchangeability a resistance such as 281 may be similarly included in the phonograph A of Figure 1, and/or of phonograph B of that figure, with no harmful result to the functioning of that system.) As to purely internal wiring the phonograph A of Figure 2 is quite identical with that of Figure 1. But of course there are omitted all conductors proceeding in the circuit of Figure 1 from components within phonograph A into the coupling unit D or therethrough into the phonograph B—i. e., conductors 40, 40' and 55a; and the rightward extensions from phonograph A of the conductors 12a, 12b and 12c are of course omitted. The only actual changes of wiring are the following: Conductor 54a', formerly passing from the control station into the coupling unit D, is now led to the non-contact extremity of start magnet 21 through high resistance 282 (which may be external of phonograph A) and conductor 283 (the

latter thus taking the place within phonograph A of the conductor 55a of Figure 1); and the conductor 12c, which in Figure 1 was nowhere connected within phonograph A, is now led to the contact 5 (vacated by the now-removed conductor 40). Contact 2 may remain unconnected, as may optionally contact 3—either jumper 34 or 35 now being unnecessary though innocuous.

Consideration being given to the system of Figure 2 for the moment without reference to its indicating means, its operation will be seen to be purely a simplification of that of the system of Figure 1. The successive starting switch 32 is idle, since there is no other phonograph to be started. The self-stopping switch automatically closes the stopping circuit, which is identical to that of Figure 1, when the sound box reaches its travel limit, actuating the stop magnet; this magnet as before may also be actuated directly from the control station by rightward throwing of switching device 80 to apply conductor 12 potential to conductor 54a. The starting circuit is of course simplified by the non-inclusion therein of any successive starting switch located on any other phonograph, and by the application of conductor 12 potential (whenever switching device 80 is leftwardly thrown) through conductor 12c directly to the contact 5; the protective switch 65 is retained, however, and still serves to prevent the dictator's starting the system (by leftward throwing of switching device 80) when the sound box is not in position for appreciable further travel.

The indicating means—in respect of the standby pilot lamp 260 and of the pilot lamp 270, indicating the rotation or non-rotation of the phonograph mandrel—are obviously entirely similar to those of the system of Figure 1. The pilot lamp 270', however, can no longer serve any useful function insofar as a further phonograph is concerned, and is accordingly arranged in the instant system to give a different and now peculiarly useful indication. This is a warning to the dictator of the approach of the sound box to the end of its travel; and the lamp 270' gives this indication by lighting as the protective switch 65 opens up, and remaining lit so long as it remains open (and switching device 80 remains leftwardly thrown). The lamp 270' so lights for the following reason: It tends to be lit whenever switch 80 is leftwardly thrown, by virtue of its connection from conductor 12a through conductor 54a' and the series resistance combination 282—281 to conductor 11; but so long as protective switch 65 is closed the conductor 283 (an intermediate point in the series resistance combination 282—281) is therethrough connected to conductor 12c and through switching device 80 to conductor 12a, thus then shorting the serially connected resistance 282 and lamp 270' and extinguishing the latter. It will be understood that the choice of an intermediate point in the high resistance combination 282—281, as a point in the circuit of pilot lamp 270' for connection to the contact 6 of switch 65, is dictated by the necessity for non-interference by any portion of the indicating means with the normal functions of the operating circuits.

While the system of Figure 1 is primarily adapted for sequential operation of the phonographs, it will of course be understood that it may when desired be specially manipulated (e. g., by the attendant) to provide simultaneous or duplicate recordings. This is done for example, as soon as one phonograph is placed in operation, by manually moving the arm 18 or 18' of that phonograph sufficiently to close the associated successive starting switch 32 or 32' but insufficiently to close the associated self-stopping switch 41 or 41'. Thus a second of the phonographs is started and will operate in unison with the first-mentioned, each phonograph stopping itself as usual at the end of its sound box travel. A similar practice for starting a second of the phonographs may be carried out by the attendant if he wishes to stop the first machine before its record is completely filled, as for purposes of removal of that record—the arm 18 or 18' of the first phonograph, after a slight interval of joint phonograph operation, being subsequently manually moved all the way to close the self-stopping switch 41 of the first phonograph.

And while throughout the specification I have described the phonographic systems and their operations, and the various features of my invention, in terms of specific embodiments thereof, I intend thereby no unnecessary limitations; rather I intend in the appended claims to claim my invention, and all its novel sub-combinations, elements and individual features, as broadly as the state of the art will permit.

I claim:

1. In combination, a plurality of phonographs; an automatic system energizable at will to maintain the same in sequential operation, said system consisting of a plurality of interconnected control devices providing and responsive to momentary actuations only; a switch closed when said system becomes energized; and circuit means, controlled by said switch and serially including a selecting device controlled by the phonographs for selecting therebetween, for starting a single one of said phonographs.

2. In combination, a plurality of phonographs; an automatic system energizable at will to maintain but not to start the same in sequential operation; a switch closed when said system becomes energized; and circuit means, controlled by said switch and serially including a selecting device controlled by the phonographs for selecting therebetween, for starting a single one of said phonographs.

3. In combination, a plurality of phonographs; an automatic system energizable to maintain the same in sequential operation, said system including a plurality of stopping means for the several phonographs respectively; means movable selectively to energize said automatic system and to actuate the stopping means of all operating phonographs and circuit means, operated when said movable means is moved to energize said system and serially including a selecting device controlled by the phonographs for selecting therebetween, for starting a single one of said phonographs.

4. In combination, a plurality of phonographs; an automatic system energizable to maintain the same in sequential operation, said system including a plurality of stopping means for the several phonographs respectively; means movable selectively to energize said automatic system and to actuate the stopping means of all operating phonographs and circuit means, operated when said movable means is moved to energize said system and serially including a selecting device controlled by the phonographs for selecting therebetween, for starting the last precedingly started said phonograph.

5. A system of plural phonographs having, in combination, a plurality of starting means, each

responsive to momentary actuation, for placing the respective phonographs in sustained operation; an automatic system energizable at will progressively to actuate said means and stop said phonographs for sequential phonograph operation; and circuit means, operated when said automatic system becomes energized and including a selecting device operated by the phonographs for selecting between said starting means, for actuating a single one of said starting means.

6. A system of plural phonographs having, in combination, a plurality of starting means, each responsive to momentary actuation, for placing the respective phonographs in sustained operation; an automatic system energizable to progressively actuate said means and stop said phonographs for sequential phonograph operation; means movable selectively to energize said automatic system and to place all said phonographs out of operation; and circuit means, operated when said movable means is moved to energize said system and including a selecting device operated by the phonographs for selecting between said starting means, for actuating a single one of said starting means.

7. A system of plural phonographs having, in combination, a plurality of starting means, each responsive to momentary actuation, for placing the respective phonographs in sustained operation; an automatic system energizable to progressively actuate said means and stop said phonographs for sequential phonograph operation; means movable selectively to energize said automatic system and to place all said phonographs out of operation; and circuit means, operated when said movable means is moved to energize said system and including a selecting device operated by the phonographs for selecting between said starting means, for actuating the last precedingly actuated starting means.

8. A system of plural phonographs having, in combination, a plurality of electrically actuable means for starting the respective phonographs; means for maintaining said phonographs in sequential operation, including a plurality of switches each operated by a respective phonograph to actuate the starting means of another phonograph; and means for starting said sequential operation, including an automatic selecting device, said device comprising a plurality of switch means respectively connected in parallel with the several said switches, and means controlled by the phonographs for wholly alternately closing said switches.

9. A system of plural phonographs having, in combination, a plurality of electromagnetic means, each comprising a respective coil, for starting the respective phonographs; means for successively actuating said starting means to maintain sequential phonograph operation; and means for starting said sequential operation, including an automatic selecting device having a plurality of coils each connected with a respective one of said first-mentioned coils for actuation simultaneously therewith.

10. A system of plural phonographs having, in combination, a plurality of electrically actuable means for starting the respective phonographs, each said means being arranged for open-circuiting in response to actuation thereof; means for successively actuating said starting means to maintain sequential phonograph operation; and means for starting said sequential operation, including an automatic selecting device having a plurality of coils each connected for simultaneous actuation with a respective one of said starting means, and means for open-circuiting each said coil upon actuation thereof until the actuation of another of said coils.

11. A system of plural phonographs having, in combination, means energizable at will to place and maintain said phonographs in sequential operation; a selecting device, controlled by the phonographs in their preceding operations, for determining the first of said phonographs to start upon next ensuing energization of said first-recited means; and means, connected with and controlled by said selecting device, for indicating in advance of said energization that phonograph which will first operate upon said energization.

12. A system of plural phonographs having, in combination, a plurality of electromagnetic means, each comprising a respective coil, for starting the respective phonographs; means for maintaining said phonographs in sequential operation, including a plurality of switches each operated by a respective phonograph to actuate the starting means of another phonograph; and means for starting said sequential operation, including an automatic selecting device having a plurality of coils each connected with a respective one of said first-mentioned coils for actuation simultaneously therewith, and a plurality of switch means respectively connected in parallel with the several said switches.

13. In a system including a phonograph and means for operating the same: a device momentarily actuable to influence the operation of said phonograph; means responsive to actuation of said device for open-circuiting said device; a switch closable to supply power to said device to actuate the same; high-resistance indicating means shunted across said switch to draw power through said device; and additional means for actuating said device, said indicating means being open-circuited by said open-circuiting means upon actuation of said device by either said switch or said additional actuating means.

14. In a system including a phonograph: a device momentarily actuable to start and a device momentarily actuable to stop the operation of said phonograph; means for open-circuiting each of said devices upon the actuation thereof and until the actuation of the other; a switch closable to supply power to one of said devices to actuate the same; high-resistance indicating means shunted across said switch to draw power through said one device; and additional means for actuating said one device, said indicating means being open-circuited by said open-circuiting means upon actuation of said one device by either said switch or said additional actuating means.

ORVILLE M. DUNNING.