March 24, 1936. J. MAJORS 2,034,916

SAFETY DELIVERY RECEPTACLE

Filed Jan. 31, 1935 2 Sheets-Sheet 1

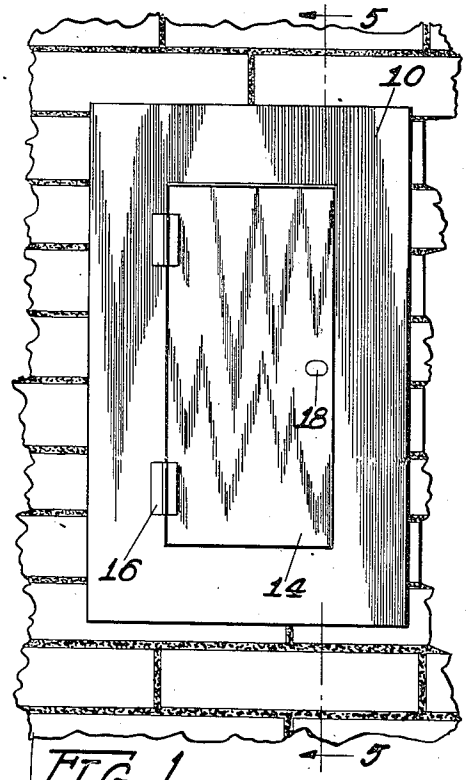

FIG. 1

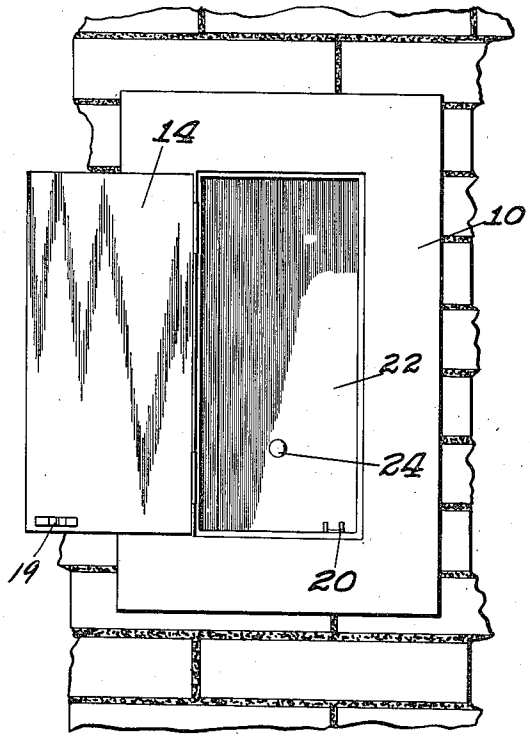

FIG. 2

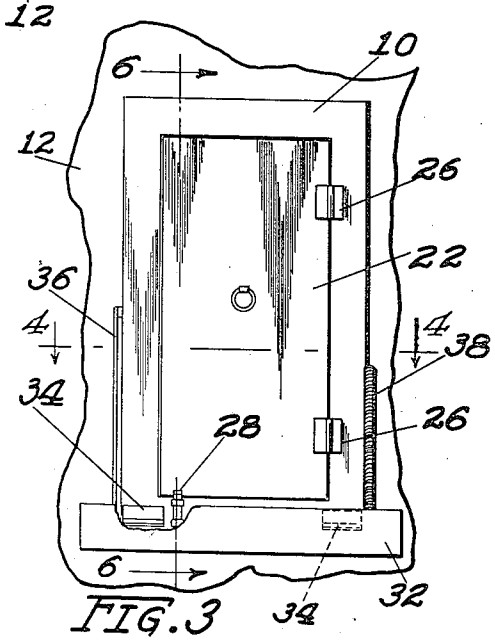

FIG. 3

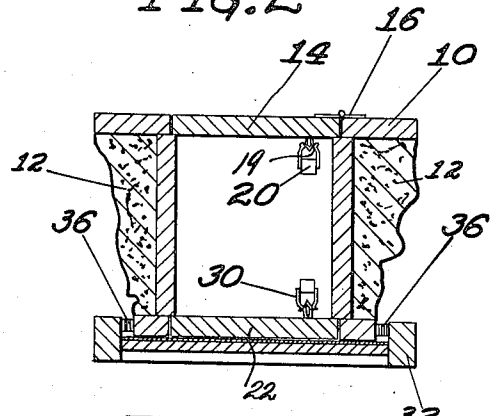

FIG. 4

JOHN MAJORS
INVENTOR

PER Albert J. Fihe
ATTORNEY

March 24, 1936. J. MAJORS 2,034,916

SAFETY DELIVERY RECEPTACLE

Filed Jan. 31, 1935 2 Sheets-Sheet 2

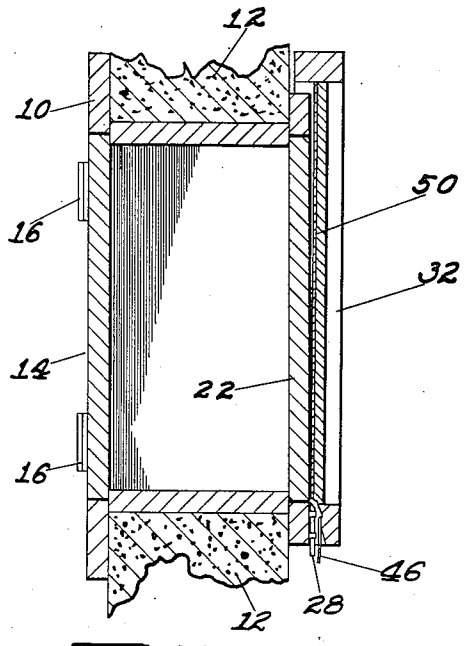

FIG. 5

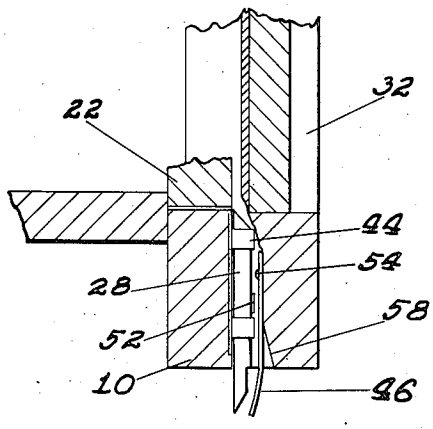

FIG. 7

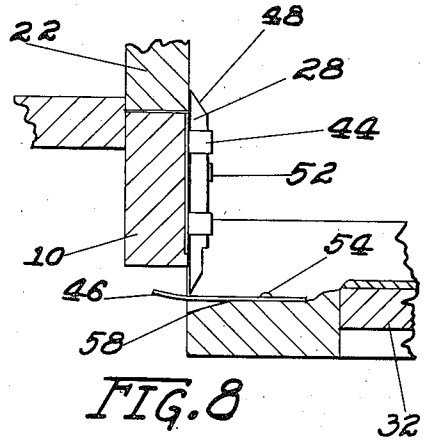

FIG. 8

FIG. 6

JOHN MAJORS
INVENTOR

PER Albert J. Fihe
ATTORNEY

Patented Mar. 24, 1936 2,034,916

UNITED STATES PATENT OFFICE

2,034,916

SAFETY DELIVERY RECEPTACLE

John Majors, Muskegon, Mich.

Application January 31, 1935, Serial No. 4,363

16 Claims. (Cl. 232—1)

This invention relates to an improved safety delivery receptacle and has for one of its principal objects the provision of a device by means of which milk in bottles and also other products may be delivered to a dwelling without disturbing the occupants and also in such a manner that the delivered products will thereafter be free from molestation or theft and also secure against the action of the elements, such as rain, frost or the like.

One of the important objects of this invention is to provide a safety receptacle for the delivery of various commodities, particularly foods or the like which can be readily incorporated, into the wall of a dwelling of any type, either old or new, and which will render the delivery of such commodities simple and easy without the necessity of any special locks or similar devices, while, at the same time, effectively preventing unauthorized disturbance of the delivered products, as by theft or the like.

Still another and further important object of the invention is to provide a means for delivery of milk or the like which will enable the housewife to conveniently gain access to the delivered articles, which, however, are securely locked against prowlers or others, and which, furthermore, will automatically unlock itself after the delivered articles have been removed, so that the apparatus is then immediately ready for further delivery operations.

Other and further important objects of the invention will be apparent from the disclosures in the accompanying drawings and following specification.

The invention, in a preferred form, is shown in the drawings and hereinafter more fully described.

In the drawings:

Figure 1 is a front elevation of the improved safety delivery device of this invention, showing the outer door closed.

Figure 2 is a view somewhat similar to Figure 1, but showing the outer door open.

Figure 3 is a rear view of the apparatus, illustrating the inner door and showing the same in closed position.

Figure 4 is a horizontal sectional view taken on the line 4—4 of Figure 3, looking in the direction indicated by the arrows.

Figure 5 is a sectional view taken on the line 5—5 of Figure 1, looking in the direction indicated by the arrows.

Figure 6 is a sectional view taken on the line 6—6 of Figure 3, looking in the direction indicated and showing the device in position for removal of the delivered articles.

Figure 7 is a detail view of the automatic locking and release element for the inner door, showing the same in unlocked position.

Figure 8 is a view of the same device, showing it in position to lock the inner door.

As shown in the drawings:

The reference numeral 10 indicates generally the outer framework of the improved safety delivery means of this invention, the same being adapted to be fitted into a corresponding opening formed in the wall 12 of a house or the like, and provided with an outer door 14 mounted on hinges 16 and provided with an operating handle 18.

As best shown in Figure 2, the outer door 14 is adapted to be releasably held in closed position by means of the two co-acting parts 19 and 20 of a spring clip positioned just inside the door.

The apparatus may be made of any desired size, but is primarily designed for the delivery of milk, and therefore, preferably the interior portion thereof is of approximately a size to conveniently hold a quart milk bottle. The inner opening is also closed by a door 22, which door is normally in shut position and operated from its front side by means of a handle 24.

The inner face of the door 22 is best illustrated in Figure 3, the same being mounted on hinges 26, and a latching element 28 is mounted on the frame 10 below the door, adapted to maintain the door in locked position under certain conditions. The inner door is adapted to be releasably held in closed position by means of a clip 30 similar to the clip 20 for the front door.

As best shown in Figure 5, the delivery platform 32 is positioned behind the inner door and is mounted on hinges 34 for movement into an article delivery position as shown in Figure 6. Hinged brackets 36 support the platform when it is in lowermost position, and these brackets are of sufficient strength to enable the platform to contain and safely support a considerable weight. A helical spring 38 is attached to the platform 32 for the purpose of drawing the same into uppermost position, as shown in Figure 5, when there is no weight on the platform.

An automatic latching element for the inner door 22 is provided, and, as already stated, comprises essentially a latch 28 which is mounted in suitable slides 44 on the frame 10 below the rear door 22 and behind the same.

Mounted in a recess in the lower end of the delivery platform 32 is a metal spring or the like 46 which is adapted to ride under the lower end of the latching element 28, and as best shown in Figures 7 and 8, will push the latching element 28 into uppermost position with respect to the door 22 when the platform 32 is in lowermost position. This effectively prevents any rearward pushing of the door 22, and accordingly locks the same against unauthorized entry from without.

In operation, the milkman or other delivery person, when making his rounds, opens the outer

door 14, it being assumed, of course, that the delivery platform is empty and that the tension of the spring 38 has raised the same into the position shown in Figure 5, whereupon the latch 28 will be in the position shown in this figure and in Figure 7. This, accordingly, leaves the door 22 unlocked. The operator thereupon, after having opened the door 14, pushes the bottle of milk or other commodity through the housing against the inner door 22, opening the same, and the action of opening this door will push the delivery platform 32 downwardly about its hinges 34 into the position shown in Figures 3 and 6, after which the bottle of milk or other commodity is deposited on the platform.

The platform 32 is preferably lined with a metal plate or the like 50 so as to be more proof against wear and also to provide a more satisfactorily operating apparatus. The weight of one bottle of milk will be sufficient to hold the platform 32 in lowermost position against the tension of the spring 38 and thereupon the delivery man may insert more bottles or other commodities, placing the same on the platform. After the delivery operation is complete, the handle 24 of the door 22 is grasped and the same closed, the bottom edge of the door 22 riding over the correspondingly beveled face 48 of the latch element 28, assuming the position shown in Figures 6 and 8. This closing action of the door 22 coupled with the downward movement of the latch 28 is made possible because the metal cam element 46 comprises a leaf spring which is fastened in position by means of a nail or rivet 54, and is allowed to move downwardly a sufficient distance to allow the closing of the door 22 on account of a beveled edge or cut-away portion 58 of the corresponding portion of the platform 32, all as best shown in Figures 7 and 8. A lug or projection 52 on the latch 28 prevents the same from falling out of the retainers 44 and also limits the upward and downward action of this element.

The delivered articles are thereupon in a position to be readily removed by the housewife or servant, and after the last article has been removed, the tension of the spring 38 will cause the platform 32 to immediately resume its vertical position as shown in Figure 5, whereupon the latch 28 will fall by gravity into the position shown in this figure and in Figure 7, leaving the device in condition for a further delivery operation. The metal lining 50 of the platform 32 also insures against wear along the arc where the lower outside corner of the door 22 contacts the same when the door is pushed open and the platform 32 accordingly moved downwardly.

It will be evident that herein is provided a safety delivery receptacle which will be quite a boon to milkmen and housewives generally and also other purveyors of food and articles, which, if left outside upon delivery, are likely to be tampered with or stolen. The device of this invention eliminates the use of any special keys which are obviously impractical for delivery purposes and securely locks the delivered articles against theft or any outside influence, while, at the same time, rendering the same readily accessible to the housewife or servant. Furthermore, the device is so arranged that, when it is in position for delivery of articles, any sneak thief or prowler, even though he will open the same, cannot gain access to the articles in the interior of the house, and animals such as stray cats or the like cannot possibly enter through the two doors and their locking means.

I am aware that many changes may be made and numerous details of construction varied throughout a wide range without departing from the principles of this invention, and I, therefore, do not purpose limiting the patent granted hereon otherwise than as necessitated by the prior art.

I claim as my invention:

1. A safety delivery receptacle, comprising a housing adapted to be fitted into the wall of a building, an outer door and an inner door for the receptacle, and means for automatically locking the inner door upon delivery of articles through the housing, said means including a delivery platform distinct from, but associated with the inner door and a latch associated with the platform for locking the inner door when the platform is in article holding position.

2. A safety delivery receptacle, comprising a housing adapted to be fitted into the wall of a building, an outer door and an inner door for the receptacle, and means for automatically locking the inner door upon delivery of articles through the housing, said means including a delivery platform hingedly mounted on the rear face of the housing.

3. A safety delivery receptacle, comprising a housing adapted to be fitted into the wall of a building, an outer door and an inner door for the receptacle, and means for automatically locking the inner door upon delivery of articles through the housing, said means including a delivery platform hingedly mounted on the rear face of the housing, and means for normally impelling the platform into vertical position.

4. A safety delivery receptacle, comprising a housing adapted to be fitted into the wall of a building, an outer door and an inner door for the receptacle, and means for automatically locking the inner door upon delivery of articles through the housing, said means including a delivery platform hingedly mounted on the rear face of the housing, and means for normally impelling the platform into vertical position, and latch means for the rear door associated with the platform.

5. A safety delivery receptacle, comprising a housing adapted to be fitted into the wall of a building, an outer door and an inner door for the receptacle, and means for automatically locking the inner door upon delivery of articles through the housing, said means including a delivery platform hingedly mounted on the rear face of the housing, and means for normally impelling the platform into vertical position, and latch means for the rear door associated with the platform, and means for allowing the latch means to assume a release position when the platform is in raised position.

6. A safety delivery receptacle, comprising a housing adapted to be fitted into the wall of a building, an outer door and an inner door for the receptacle, and means for automatically locking the inner door upon delivery of articles through the housing, said means including a delivery platform hingedly mounted on the rear face of the housing, and means for normally impelling the platform into vertical position, and latch means for the rear door associated with the platform, and means for allowing the latch means to assume a release position when the platform is in raised position, said means causing the latch

means to move to upward and locking position when the platform is in lowered position.

7. A safety delivery receptacle, including a hollow box-like housing, a door in each face of the housing, an article receiving platform hingedly positioned on the rear face of the housing, and latch means associated with the platform for locking the inner door when the platform is in lowered article supporting position.

8. A safety delivery device, including a box-like housing adapted to be fitted into the wall of a building to provide a passage therethrough, front and rear doors for the housing, a delivery platform associated with the rear face of the housing and adapted to be moved into article receiving position upon the opening of the rear door.

9. A safety delivery device, including a housing adapted to be fitted into the wall of a building to provide a passage therethrough, front and rear doors for the housing, a delivery platform associated with the rear face of the housing and adapted to be moved into article receiving position upon the opening of the rear door, and brackets for assisting to support the platform and any articles thereon.

10. A safety delivery device, including a housing adapted to be fitted into the wall of a building to provide a passage therethrough, front and rear doors for the housing, a delivery platform associated with the rear face of the housing and adapted to be moved into article receiving position upon the opening of the rear door, and brackets for assisting to support the platform and any articles thereon, together with a spring for returning the platform to raised position upon the removal of all articles therefrom.

11. A safety delivery device, including a housing adapted to be fitted into the wall of a building to provide a passage therethrough, front and rear doors for the housing, a delivery platform associated with the rear face of the housing and adapted to be moved into article receiving position upon the opening of the rear door, and brackets for assisting to support the platform and any articles thereon, together with a spring for returning the platform to raised position upon the removal of all articles therefrom, together with latch means associated with the platform and the rear door for locking the rear door when the platform is in lowered position.

12. A safety delivery device, including a housing adapted to be fitted into the wall of a building to provide a passage therethrough, front and rear doors for the housing, a delivery platform associated with the rear face of the housing and adapted to be moved into article receiving position upon the opening of the rear door, and brackets for assisting to support the platform and any articles thereon, together with a spring for returning the platform to raised position upon the removal of all articles therefrom, together with latch means associated with the platform and the rear door for locking the rear door when the platform is in lowered position, and unlocking said door when the platform is in raised position.

13. A safety delivery device, including a housing adapted to be fitted into the wall of a building to provide a passage therethrough, front and rear doors for the housing, a delivery platform associated with the rear face of the housing and adapted to be moved into article receiving position upon the opening of the rear door, and brackets for assisting to support the platform and any articles thereon, together with a spring for returning the platform to raised position upon the removal of all articles therefrom, together with latch means associated with the platform and the rear door for locking the rear door when the platform is in lowered position, and unlocking said door when the platform is in raised position, and means for operating said latch, said means comprising a cam element associated with the platform adjacent the latch.

14. A safety delivery device, including a housing adapted to be fitted into the wall of a building to provide a passage therethrough, front and rear doors for the housing, a delivery platform associated with the rear face of the housing and adapted to be moved into article receiving position upon the opening of the rear door, and brackets for assisting to support the platform and any articles thereon, together with a spring for returning the platform to raised position upon the removal of all articles therefrom, together with latch means associated with the platform and the rear door for locking the rear door when the platform is in lowered position, and unlocking said door when the platform is in raised position, and means for operating said latch, said means comprising a cam element associated with the platform adjacent the latch, and further means for limiting the movement of the latch in its locking and unlocking positions.

15. A safety delivery device, including a housing adapted to be fitted into the wall of a building to provide a passage therethrough, front and rear doors for the housing, a delivery platform associated with the rear face of the housing and adapted to be moved into article receiving position upon the opening of the rear door, and brackets for assisting to support the platform and any articles thereon, together with a spring for returning the platform to raised position upon the removal of all articles therefrom, together with latch means associated with the platform and the rear door for locking the rear door when the platform is in raised position, and means for operating said latch, said means comprising a cam element associated with the platform adjacent the latch, and a cam face on the latch adapted to allow the rear door to be moved thereover into locked position when the platform is in lowered article supporting position.

16. A safety delivery device, including a housing adapted to be fitted into the wall of a building to provide a passage therethrough, front and rear doors for the housing, a delivery platform associated with the rear face of the housing and adapted to be moved into article receiving position upon the opening of the rear door, and brackets for assisting to support the platform and any articles thereon, together with a spring for returning the platform to raised position upon the removal of all articles therefrom, together with latch means associated with the platform and the rear door for locking the rear door when the platform is in raised position, and means for operating said latch, said means comprising a cam element associated with the platform adjacent the latch, said cam element comprising a leaf spring.

JOHN MAJORS.