(19) DANMARK

Patent- og
Varemærkestyrelsen

(10) **DK/EP 3551876 T3**

(12) Oversættelse af
europæisk patentskrift

(51) Int.Cl.: ***F 03 D 7/02 (2006.01)*** ***A 62 C 3/00 (2006.01)*** ***F 03 D 17/00 (2016.01)***

(45) Oversættelsen bekendtgjort den: **2021-06-14**

(80) Dato for Den Europæiske Patentmyndigheds
bekendtgørelse om meddelelse af patentet: **2021-04-07**

(86) Europæisk ansøgning nr.: **17809199.7**

(86) Europæisk indleveringsdag: **2017-11-10**

(87) Den europæiske ansøgnings publiceringsdag: **2019-10-16**

(86) International ansøgning nr.: **EP2017078850**

(87) Internationalt publikationsnr.: **WO2018108402**

(30) Prioritet: **2016-12-12 DE 102016124016**

(84) Designerede stater: **AL AT BE BG CH CY CZ DE DK EE ES FI FR GB GR HR HU IE IS IT LI LT LU LV MC MK MT NL NO PL PT RO RS SE SI SK SM TR**

(73) Patenthaver: **Wobben Properties GmbH, Borsigstrasse 26, 26607 Aurich, Tyskland**

(72) Opfinder: **KNOOP, Frank, Nee Streek 13, 26607 Aurich, Tyskland**
COORDES, Ihno, Düsterweg 10, 26632 Ihlow, Tyskland
GRÜNHAGEL, Jörg, Am Tummelbusch 4, 26607 Aurich, Tyskland

(74) Fuldmægtig i Danmark: **Zacco Denmark A/S, Arne Jacobsens Allé 15, 2300 København S, Danmark**

(54) Benævnelse: **Vindenergianlæg og fremgangsmåde til udsugning af røg i et vindenergianlæg**

(56) Fremdragne publikationer:
EP-A1- 1 122 425
CN-A- 103 656 930
DE-A1- 10 062 405
DE-U1- 29 706 030
KR-B1- 101 394 238
US-A1- 2013 309 088

The present invention concerns a wind turbine and a method of sucking away smoke in a wind turbine.

Wind turbines typically have a large number of electrical and in particular power-electronic units both in the pod and also in the lower region of the tower. For example a generator and a rectifier can be disposed in the pod while an inverter, other power-electronics units and for example a transformer can be provided in the lower region of the tower. In order to prevent the spread of fire or smoke smoke protection covers or fire protection covers can be provided in the tower of the wind turbine.

However, smoke protection covers or fire protection covers are expensive to manufacture or fit in place.

On the German patent application from which priority is claimed the following documents were searched: DE 100 62 405 A1, WO 2015/078480 1 and US 2011/0138699 A1. A system for detecting smoke and for removing smoke from the gondola of a wind turbine is known from KR 101394238B B1.

Thus an object of the present invention is to provide a wind turbine having improved fire protection.

This object is achieved by a wind turbine according to claim 1.

Thus there is provided a wind turbine comprising a tower, a pod, at least one smoke detector in the region of the tower and/or in the region of the pod, at least one fan which is arranged in the tower and/or in the pod, and a control unit which detects a fire situation or the development of smoke in the wind turbine by means of the fire detector and activates the fans disposed in the tower and/or in the pod to suck away to the exterior the smoke produced. This is effected in particular when there are people in the wind turbine to prevent the people suffering from smoke inhalation poisoning. If maintenance of the wind turbine is being implemented then the wind turbine can be switched into a maintenance mode and the control unit can activate the fans in the case of smoke production.

According to an aspect of the present invention an evacuation platform is provided on the tower.

According to another aspect of the present invention, an access door is provided in the tower. The control unit can control the at least one fan in dependence on whether the access door has been opened.

According to a further aspect of the present invention an opening is provided in the tower and/or an opening in the pod, wherein the smoke can be sucked away through the opening in the pod.

According to the invention there is provided a wind turbine having a smoke extraction installation in the interior of the wind turbine, for example in the tower and/or in the pod of the wind turbine. The smoke extraction installation can for example use the fan disposed in the wind turbine to suck smoke for example from the lower tower region or in the pod to the exterior.

Optionally, in addition to the already existing fan for cooling the power-electronics generator or the transformer, additional fans can be installed to permit effective extraction of smoke which develops in the wind turbine.

The invention concerns in particular the situation where maintenance or service personnel are in the wind turbine when a fire occurs. In such a case it is necessary to ensure that the service personnel or the maintenance personnel are evacuated from the wind turbine as quickly as possible. As smoke poisoning is the most common cause of death in fire situations the invention seeks to make it possible to suck away smoke as effectively as possible. For enhanced safety the fans used can have an uninterruptible power supply.

The wind turbine according to the invention is advantageous because for example it is possible to dispense with fire protection covers or smoke protection covers.

Further embodiments of the invention are the subject-matter of the appendant claims.

Advantages and embodiments by way of example of the invention are described hereinafter with reference to the drawing.

Figure 1 shows a diagrammatic view of a wind turbine according to the invention,

Fig. 2 shows a diagrammatic sectional view of a wind turbine according to a first embodiment of the invention and

Fig. 3 shows a perspective view of a wind turbine according to a second embodiment of the invention.

Fig. 1 shows a diagrammatic view of a wind turbine according to the invention. Figure 1 shows a wind turbine 100 with a tower 102 and a pod 104. A rotor 106 having three rotor blades 108 and a spinner 110 is arranged at the pod 104. In operation the rotor 106 is set in rotation by the wind and thereby drives a generator in the pod 104.

Figure 2 shows a diagrammatic sectional view of a wind turbine according to a first embodiment of the invention. Figure 2 shows a wind turbine with a tower 102 and a pod 104. At least one first fan 210 is provided in the lower region of the wind turbine, and a second fan 220 can be provided in the pod. The second fan 220 can be provided in the region of the generator of the wind turbine. For example an opening 101a can be provided in the lower region of the tower 102, through which outside air AL is drawn into the interior 102b of the tower 102 of the wind turbine 100, in particular by means of the fan 210. When the first fan 210 and the second fan 220 are activated smoke can be sucked away from the lower region of the tower 102 into the pod 104 and then out to the exterior. The pod 104 can have at least one opening 104a through which outside air AL can be drawn into the interior 104b of the pod. The wind turbine can include smoke detectors 310, 320 in the tower 102 and/or in the pod 104. As soon as the smoke detectors have detected smoke operation of the wind turbine can be adapted. In particular the fans 210, 220 can be activated so that fresh outside air AL is sucked into the tower 102 through the opening 102a and the smoke R which is in the interior of the tower and/or the pod 104 can for example be sucked away upwardly to the pod and then outwardly from the pod.

The wind turbine can have a control unit 400 which is coupled to the first and second fans 210, 220 and the smoke detectors 310, 320. When the smoke detectors 310, 320 signal smoke the control unit 400 activates the first and/or second fan 310, 320. If the opening 102a and opening 104a are controllable, that is to say can be opened or closed, then those openings can be opened so that fresh air can be sucked in and the smoke can be sucked away.

A door 500 can be provided in the lower region of the tower 102a. When the door 500 is opened, that is to say when service or maintenance personnel enter the wind turbine, then the control unit 400 may stop operation of the wind turbine, that is to say the control of the rotor is stopped. Optionally, the maintenance personnel can actuate a maintenance switch so that the wind turbine is switched into a maintenance mode. If the control unit 400 then detects smoke formation within the tower and/or the pod 104 in the maintenance mode by means of the smoke detectors 310, 320, a warning signal is output so that the maintenance personnel can evacuate the wind turbine as quickly as possible. Furthermore operation of the first and second fans 210, 220 is activated to suck away the smoke in the wind turbine 100. This is particularly advantageous because in that way the risk of smoke poisoning for the maintenance personnel located in the wind turbine can be considerably reduced.

Optionally, the fan 210 or the fan 220 has an uninterruptible power supply. The smoke detectors 310, 320 may also have an uninterruptible power supply. Alternatively, the smoke detectors can have accumulators or batteries to be able to continue to operate.

Personnel safety within the wind turbine can also be improved in a fire situation by sucking away the smoke in the wind turbine. In that way the service personnel can be allowed more time for evacuation of the wind turbine.

Fig. 3 shows a perspective view of a wind turbine according to a second embodiment of the invention. According to a second embodiment which is based on the first embodiment the wind turbine or the tower 102 of the wind turbine has at least one evacuation platform 600. The evacuation platform 600 is provided in particular in the upper region of the tower. If a fire situation comes about in the wind turbine and the service or maintenance personnel are not evacuated in good time then the maintenance or service personnel can take flight onto the evacuation platform 600. The personnel can then be evacuated.

Patentkrav

1. Vindenergianlæg (100) med
et tårn (102),
en nacelle (104),
mindst en røgalarm (310, 320) i området af tårnet (102) og/eller i området af nacellen (104)
kendetegnet ved midler til registrering af, om der befinder sig personer i vindenergianlægget (100), eller om vindenergianlægget befinder sig i en vedligeholdelsesdriftsmodus,
mindst en ventilator (210, 220), som er anbragt i tårnet (102) og/eller i nacellen (104), og
en styreenhed (400), som ved hjælp af røgalarmerne (320, 310) registrerer et brandtilfælde eller en røgudvikling i vindenergianlægget (100), og som aktiverer ventilatorerne (210, 220), der befinder sig i tårnet (102) og/eller i nacellen (104), for at suge den opståede røg ud og for at forhindre en røgforgiftning af personer i vindenergianlægget.

2. Vindenergianlæg ifølge krav 1, endvidere med
en evakueringsplatform (600) på tårnet (102).

3. Vindenergianlæg ifølge krav 1 eller 2, endvidere med
en adgangsdør (500) i tårnet (102),
hvor styreenheden (400) er indrettet til at styre den mindst ene ventilator (210, 220) afhængigt af, om adgangsdøren (500) er blevet åbnet, og/eller om vindenergianlægget befinder sig i en vedligeholdelsesdriftsmodus.

4. Vindenergianlæg ifølge et af kravene 1 til 3, endvidere med en åbning (102a) i tårnet (102) og en åbning (104a) i nacellen.

5. Fremgangsmåde til udsugning af røg i et vindenergianlæg (100), som har et tårn (102) og en nacelle (104), med de følgende trin:

registrering af et brandtilfælde eller en røgudvikling ved hjælp af mindst en røgalarm (310, 320) i området af tårnet (102) og/eller i området af nacellen (104),
registrering af, om der befinder sig personer i vindenergianlægget (100), eller om vindenergianlægget befinder sig i en vedligeholdelsesdriftsmodus, og
aktivering af ventilator (210, 220) i tårnet (102) og/eller i nacellen (104) for at suge den opståede røg ud og forhindre en røgforgiftning.

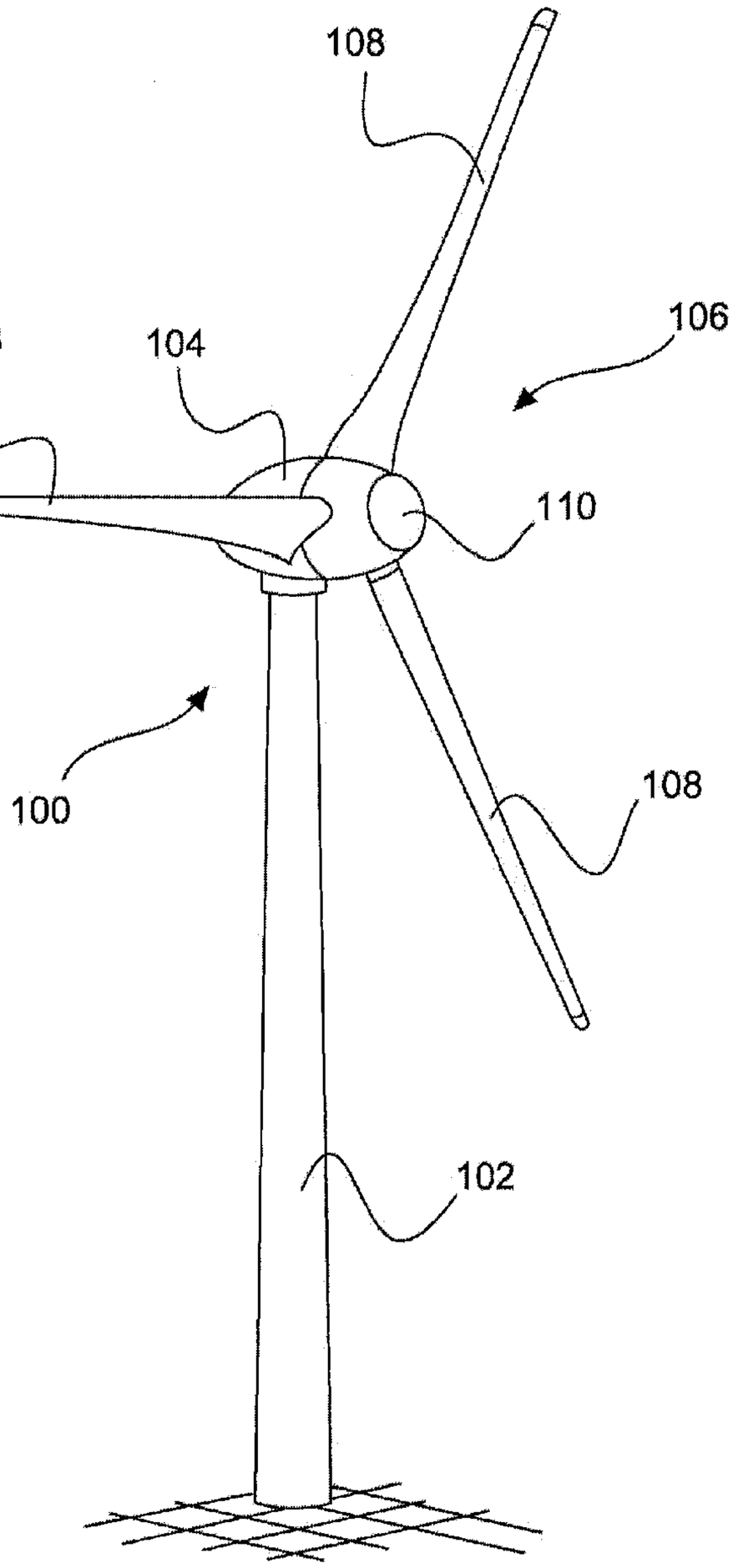

Fig. 1

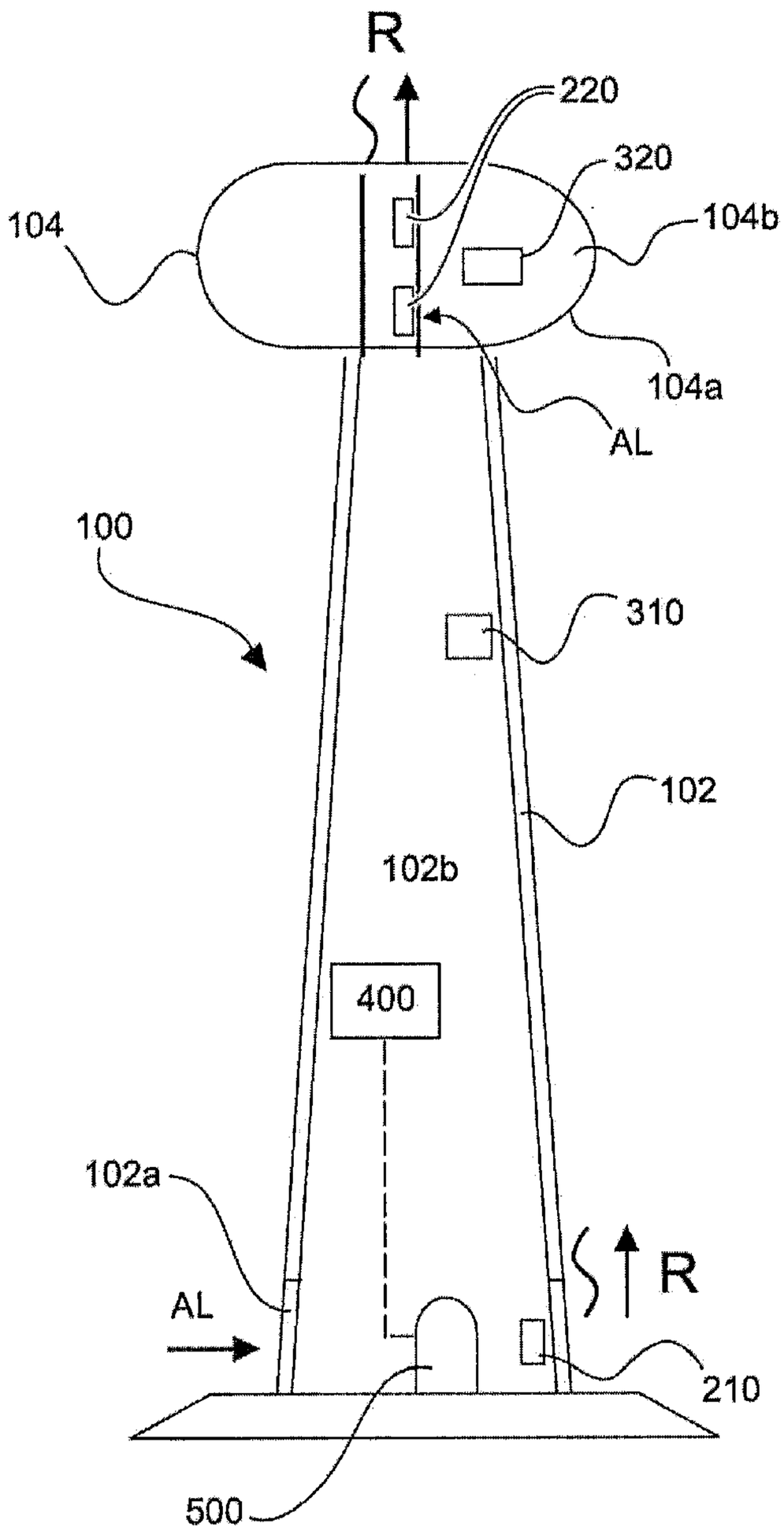

Fig. 2

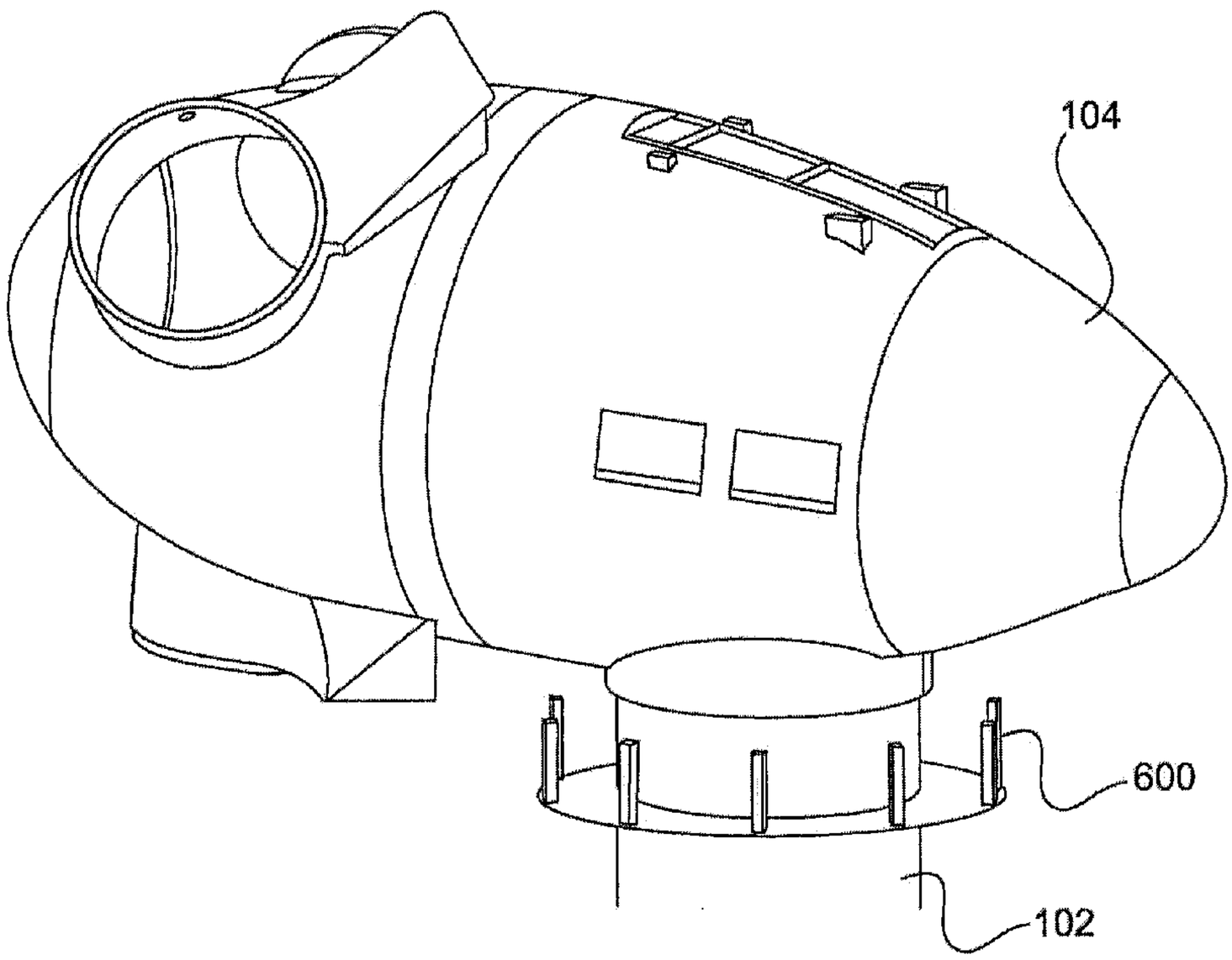

Fig. 3