Jan. 11, 1944. G. DEAKIN 2,339,063

NON-NUMERICAL HUNTING SWITCH

Filed April 19, 1941 3 Sheets-Sheet 1

FIG. 1.

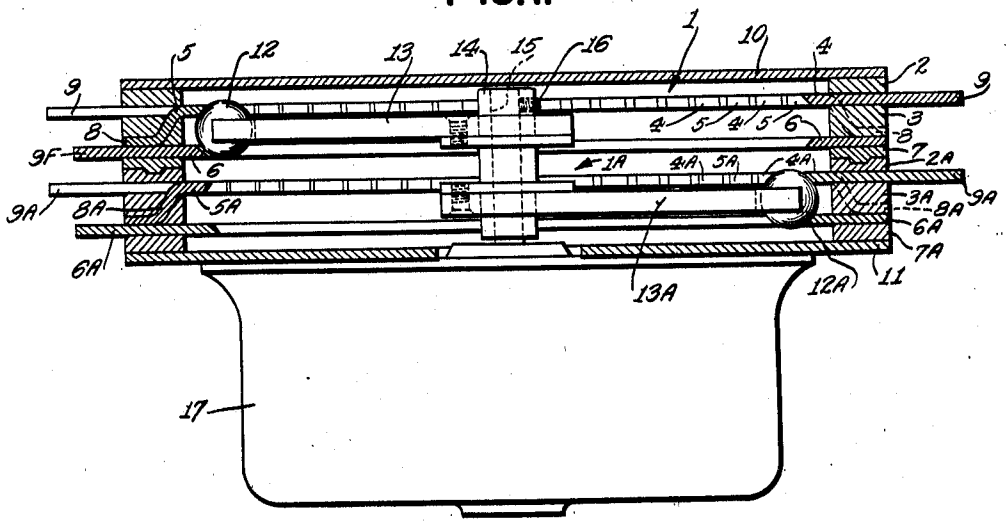

FIG. 2.

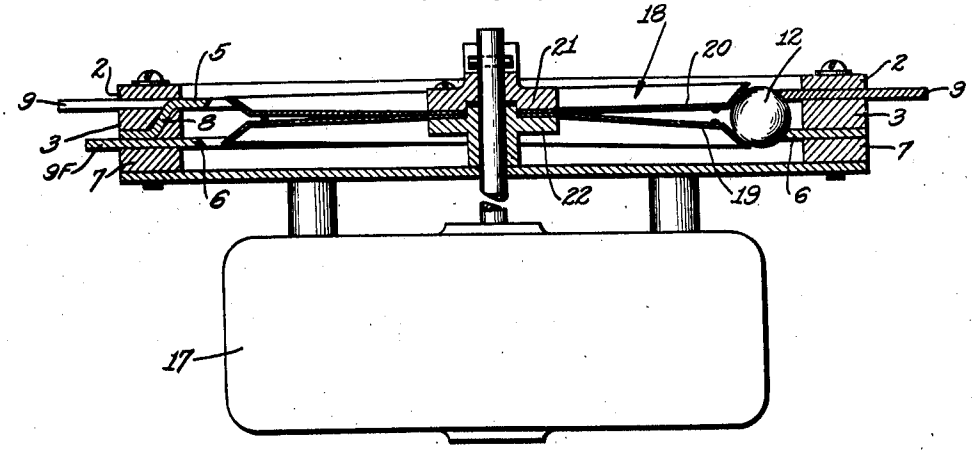

INVENTOR
GERALD DEAKIN

BY A. P. Morris
ATTORNEY

Jan. 11, 1944. G. DEAKIN 2,339,063

NON-NUMERICAL HUNTING SWITCH

Filed April 19, 1941 3 Sheets-Sheet 2

FIG. 3.

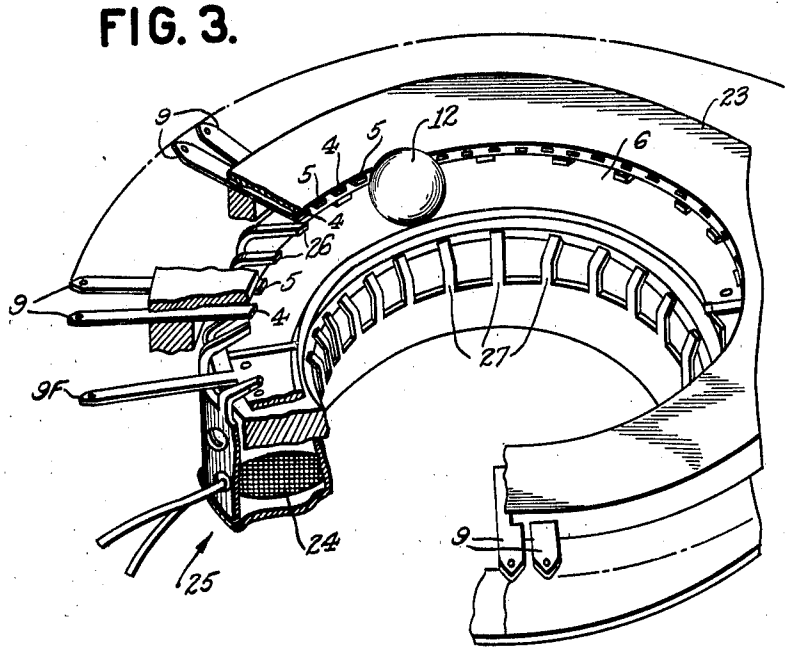

FIG. 4.

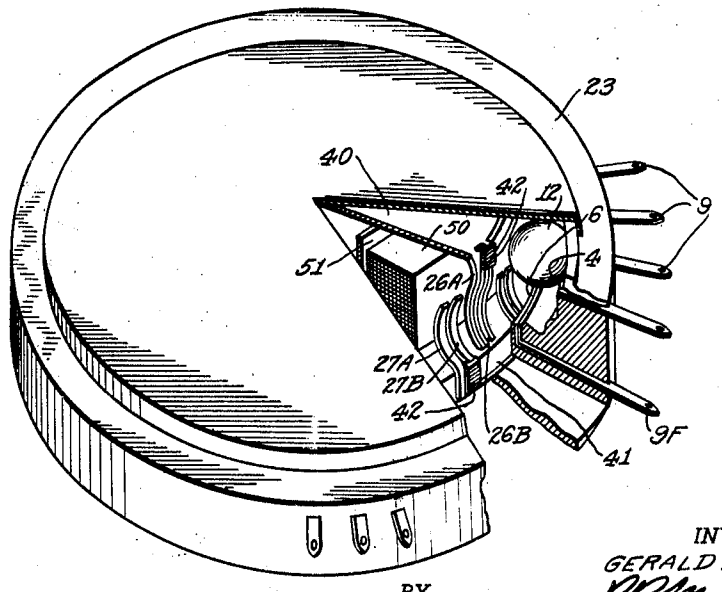

INVENTOR
GERALD DEAKIN
BY
ATTORNEY

Jan. 11, 1944. G. DEAKIN 2,339,063

NON-NUMERICAL HUNTING SWITCH

Filed April 19, 1941 3 Sheets-Sheet 3

FIG.5.

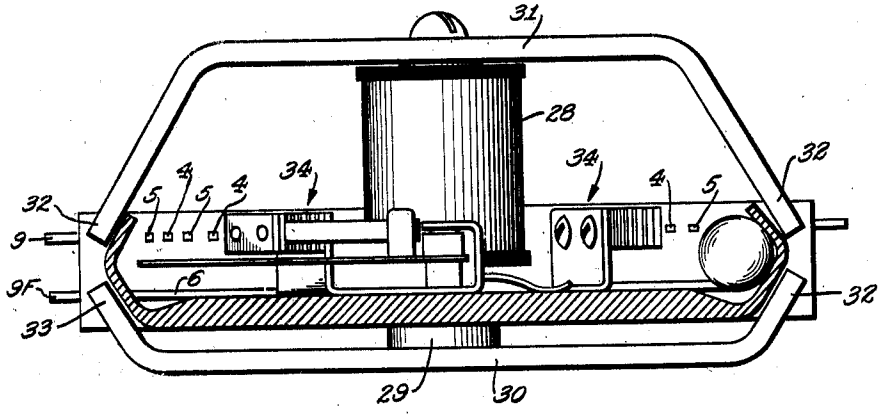

FIG.6.

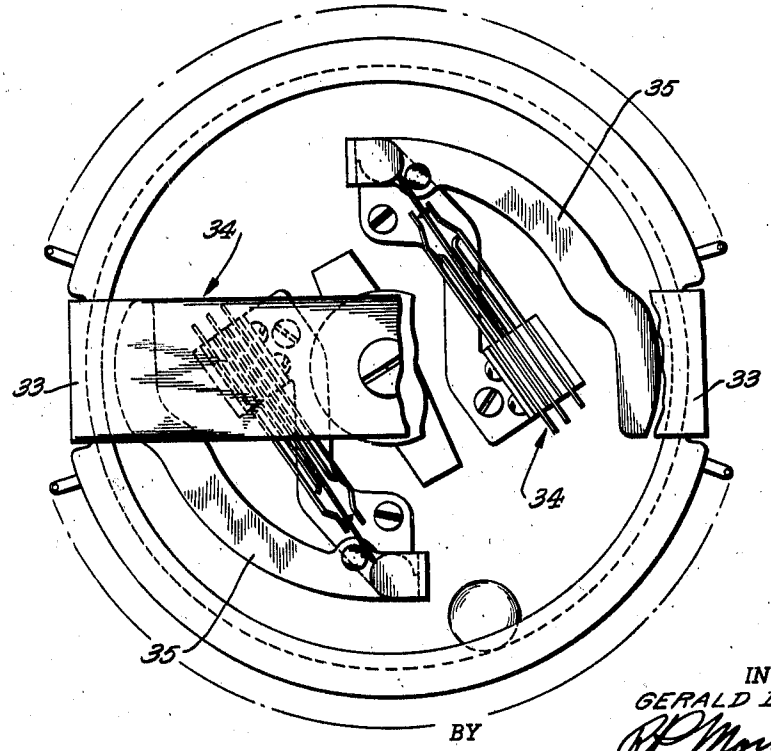

INVENTOR
GERALD DEAKIN
BY
ATTORNEY

Patented Jan. 11, 1944

2,339,063

UNITED STATES PATENT OFFICE

2,339,063

NONNUMERICAL HUNTING SWITCH

Gerald Deakin, New York, N. Y., assignor to International Standard Electric Corporation, New York, N. Y., a corporation of Delaware

Application April 19, 1941, Serial No. 389,352
In the Netherlands April 19, 1940

14 Claims. (Cl. 179—27.51)

The present invention relates to telecommunication exchange systems and particularly to the structure of a non-numerical hunting type switch for use in such systems.

It has already been proposed to construct a telecommunication exchange system without line or cut-off relays, the function of the line relays being performed by a detector switch or constantly rotating switch, which periodically makes connection to each line of a group for the purpose of detecting the presence of the calling condition. In such proposed system, sensitive voltage-responsive call detecting equipment is provided comprising vacuum tubes or gaseous discharge tubes, such equipment being successively associated with the different lines to be served by means of the constantly rotating switch above mentioned. Such a system is described in my copending U. S. application, Serial No. 286,220, filed July 24, 1939, now Patent No. 2,295,032, granted September 8, 1942.

A special requirement of such system is that the constantly rotating switch comprise a large number of contacts and be capable of closing the connection to each of said contacts in turn at a very rapid rate, so that a set of 50 or 100 contacts or more may be completely searched in a very short interval, preferably a fraction of a second. Another characteristic of such proposed system is that the currrent which must be carried by the constantly rotating switch is practically negligible, since the sensitive voltage responsive device connected to the lines by the switch draws practically zero current. Another characteristic of the system is that the usual requirement for low and uniform contact resistances is greatly relaxed, because of the high impedance characteristics of the voltage responsive device. A further characteristic of importance is that only momentary contact need be made to each line because of the substantially instantaneous response of the vacuum tube or gaseous discharge tube equipment.

Finally, such proposed system differs from the conventional toll communication systems, in that the constantly rotating switching equipment need not be capable of stopping upon an active or marked terminal, when such terminal is found, but may, and indeed should, continue its rotation uninterrupted.

The present invention relates particularly to an improved type of non-numerical hunting switch particularly adapted for use as a detector in a system such as above outlined. In one aspect the invention relates to the structure of the non-numerical hunting type switch per se, while in another aspect the invention relates to the combination of such switch with the particular type of system above described.

It is an object of the present invention to provide a switch capable of searching over a large number of contacts, for example, 50 or 100 contacts, with a very high contacting rate, preferably from 50 contacts per second to 200 or more contacts per second. Another object of the present invention is to provide such a switch wherein the wear of contacts and other parts is minimized, so that the switch can be operated continuously at the above mentioned high contacting rate for a period of years without substantial wear. Another object of the invention is to provide a switch whose characteristics are particularly suitable for cooperation with the proposed type of telecommunication exchange system above referred to.

In accordance with the present invention the contacts of the series to be searched are preferably arranged in a circular array and contact is made therewith by means of a conductive contacting element of circular cross-section, which is arranged to move over the series of contacts with a rolling motion rather than with the conventional sliding motion used in telecommunication switches as hitherto known. Although the rolling element may be cylindrical, conical or of other suitable form, it is preferred to make it spherical and to drive it by means which permit unrestrained rotational movement of the ball, so that the ball can not only turn about a given axis for performing its rolling action, but can also gradually shift its axis of rotation to distribute the wear over fresh surfaces.

In accordance with another feature of the invention the contacts are arranged in a circular array with their contact surfaces turned inwardly, and the ball rolls around against the inside of such circle, so that its centrifugal force presses it outwardly against the contact surfaces.

In accordance with still another feature of the invention the ball rolls simultaneously over the series of contacts to be searched and over another circular conductor; the latter being used as a "feeder ring" from which connection is made to the voltage sensitive equipment, or other apparatus to be successively associated with the lines or other conductors.

In accordance with certain forms of my invention, the rotation of the ball is caused by an impelling member driven by a motor or other

source of power and mechanically engaging the ball in rotationally unrestrained fashion. In accordance with other forms of the invention the ball is directly driven by the action of a magnetic field, which may alternate or rotate in any suitable fashion.

The invention may best be understood by reference to the attached sheets of drawings in which:

Fig. 1 represents a switch in accordance with the present invention having two mechanical impellers which cause two balls to rotate over two separate circular arrays of contacts with a rolling action;

Fig. 2 represents a modified form of switch having a mechanical impeller which itself operates on the ball with a rolling action;

Fig. 3 represents still another embodiment of the invention wherein the ball is of magnetizable material and the rotation of the ball is directly caused by a varying magnetic field;

Fig. 4 represents another embodiment wherein the ball is wholly or partly of copper or bronze and is rotated by the eddy current forces exerted upon it by a magnetic field having a rotating component;

Figs. 5 and 6 represent still another form of the invention wherein the ball is directly rotated by a magnetic field as in Fig. 3, but wherein the variations of the magnetic field are controlled by contacts actuated by the ball itself.

Referring more particularly to Fig. 1, 1 is a circular array of contacts clamped between insulating rings 2 and 3 or moulded integral therewith and comprising in succession active contacts 4 and inactive or spacer contacts 5. Six is a feeder ring clamped between insulating rings 3 and 7 below the contact array. All the spacer contacts 5 are preferably connected by straps 8 to the feeder ring 6, being most conveniently formed integrally with such feeder ring. Each of the contacts 4 is provided with a wiring terminal 9. Another similar contact and feeder ring assembly 1_A, 2_A . . . 9_A is provided directly beneath the first one, the reference characters 1_A, 2_A, etc. respectively designating the parts which correspond to the parts 1, 2, etc., of the first mentioned assembly. The complete contact arrangement comprising the two contact assemblies 2—9 and 2_A—9_A is clamped between a pair of mounting plates 10 and 11.

A ball 12_A is positioned to bridge across from the feeder ring 6_A to the contact array 1_A and is caused to rotate by a forked impeller 13_A fixed to a sleeve 14. The fork portion of the impeller 13_A fits loosely about the ball, the clearances, however, being close enough so that the ball cannot fall out from between the fork and the feeder ring when the apparatus is at rest. A similar ball 12 is disposed to make contact between contact array 1 and feeder 6 in similar fashion, and is similarly rotated by an impeller 13, likewise fixed to sleeve 14, which in turn is secured to central shaft 15 by means of set screw 16. This shaft 15 is rotated by a motor 17 which may be of any known type, but is preferably of comparatively flat construction to render the switch more compact. Preferably the motor is designed for comparatively low speed operation, for example, between 2 and 10 revolutions per second. An ordinary high speed motor may be used with a reduction gear, but it is preferred to employ one of the known types of slow speed motors, which directly gives a suitable speed without gearing.

In operation the two contact balls are constantly rolled around the inner faces of contact assemblies 2—9 and 2_A—9_A respectively by the forked impellers 13 and 13_A. Centrifugal force holds these balls firmly against the circular contact arrays and feeder rings, while the unrestrained engagement of the forked impellers 13 and 13_A permits the balls to gradually creep or shift their axes of rotation. There is substantially pure rolling action between each ball and its co-operating contact assembly. If desired the pressure of the ball on the contacts may be increased by a member carried by the impeller and spring pressed against the ball to force the latter against the contacts.

Although Fig. 1 illustrates a switch of double form having two separate contact assemblies and two corresponding balls and impellers, the switch may equally well be made single. In the double form illustrated the impellers 13 and 13_A, or the sleeve 14 are preferably of insulating material, so that the circuits of the two contact arrays and feeder rings may be electrically separate.

Fig. 2 illustrates another embodiment of the invention wherein slippage between the impeller and the ball is substantially eliminated. This embodiment is, in many respects, like that of Fig. 1 and similar parts are designated by corresponding reference characters to facilitate comparison thereof. The impeller 18 in this embodiment, however, is of a different type, being formed of two resilient discs 19, 20 whose edges are dished outwardly as shown to form a V shaped peripheral groove. The dimensions of such groove and the spacing between it and the contact assembly is so chosen as to leave slightly too little space for the ball 12. The ball thus wedges apart the two resilient discs 19 and 20 of the impeller 18, these discs being preferably partially cut out between their centre and periphery to increase flexibility. The sleeve 21 and 22 in this embodiment are also of somewhat different form from the sleeve 14 of Fig. 1, being made in two parts between which the discs 18 and 19 are clamped.

It will be understood that this embodiment may, if desired, be of the two-deck type like that of Fig. 1. It will also be understood that in either of these embodiments the motor 17 may be replaced by a clutch or gear arrangement driven from a suitable rotating shaft or by a pulley belted to a separate motor.

Fig. 3 represents still another embodiment of the invention where the rotation of the ball is directly caused by a varying magnetic field. A single circular array of contacts 4 and 5 is provided, this contact array being preferably supported by being moulded in a polymerizable or thermo-plastic insulating ring 23. The contacting ends of these contacts 4, 5 may be flush with the internal surface of the ring 23, but preferably project inwardly beyond such surface, so that the contacting ball 12 does not roll against the insulating ring. In this embodiment the spacer contacts 5 and active contacts 4 are exactly similar, being both provided with terminals 9. The terminals 9 of the spacing contacts may be left unwired or may be wired to the feeder ring 6, which is provided with a pair of terminals 9_F. The feeder ring may alternatively be omitted and the current be supplied entirely by the spacer contacts; the latter being connected together as above mentioned. For certain applications, where the bridging of successive contacts during rotation of the ball is immaterial, both the spacing con-

tacts 5 and the contacts 4 may be used as active contacts. If the contacts are flush with the surface of ring 23 the spacer contacts 5 may be omitted without causing bridging of successive contacts. It will be understood that the contact assemblies of any of the figures may be substituted for those of the other figures.

The variable magnetic field for rotating ball 12 is produced by an annular winding 24 fed with alternating current which is preferably of 50 or 60-cycle frequency and may be derived from the ordinary commercial power mains. A trough-shaped annular magnetic structure 25 surrounds this winding 24 and terminates in a plurality of teeth, or pole pieces 26 below the contact array, but outside of the track around which the ball travels and in another plurality of teeth or pole pieces 27 below and slightly inside the track of the ball. This track around which the ball travels is preferably constituted solely by the feeder ring 6 and the array of contacts 4, 5, although the insulating ring 23 may also constitute part of this track if the contacts 4 and 5 are flush with the inner surface of such ring. If the feeder ring is omitted as above mentioned a track or race of insulating material may be provided for the ball in place thereof.

Ball 12 is formed of silicon steel, soft iron or of a magnetic alloy having high permeability. Thus the ball is attracted towards the nearest pair of poles 26, 27 each time the alternating current through 24 rises to a substantial value and regardless of the sense of such current. The ball is thus attracted once for each half cycle of the alternating current, e. g., 100 times per second in the case of a 50-cycle current. The number of teeth is chosen to correspond to a desired rate of rotation. For example, 25 teeth 27 may be provided to correspond to a rotation of 4 times per second with 50-cycle current. The number of teeth 26 preferably is the same as the number of teeth 27, these teeth being aligned in pairs, so that each tooth 26 lies opposite a tooth 27.

In operation the ball is started in rotation manually, or by any suitable starting device and then continues to run in a manner of a synchronous motor, under the influence of the alternating magnetic field.

For starting the ball into rotation one or more hammers or striker levers may be arranged to be operated by a solenoid or clapper type electromagnet, such striker levers being normally out of the path of the ball, but being swung into this path to strike the ball upon energization of the electro-magnet. Striking of the ball for starting purposes may be facilitated by inclining the rotary track of the ball, so that the ball will always come to rest in a given position when the current is off, or by shaping the track of the ball so that upon cessation of rotation the ball drops inwardly onto another inner track which is warped or inclined to bring the ball to rest in a given position, or one of several given positions. In the latter case, it is not necessary for the striker lever or levers to swing into the main or outer track at all.

Alternatively, the arrangement of Fig. 3 may be modified to be self-starting by replacing each of the poles 26 and/or 27 by a double pole, one branch of which is surrounded by a short-circuited shading winding or copper strap in well-known manner. The ball may then be made of copper, bronze or other good conducting non-magnetic material, being then started and driven asynchronously by eddy current effects, or the ball may be at least partially of magnetic material, preferably with a good conducting coating of copper or the like, so as to start asynchronously and run synchronously. In the latter case however, the pole faces are preferably widened and the air gaps proportioned to minimize the locking effect of the teeth, which tends to hold the ball between whatever pair of teeth it happens to be at any instant.

Fig. 4 illustrates such a modification of Fig. 3 designed for operation with a non-magnetic ball. The contact assembly is like that of Fig. 3. For improved efficiency in driving the ball, however, the magnetic structure is somewhat modified, so that the pole pieces 26_A, 26_B, 27_A, 27_B lie near the inner face of the ball as this travels around its track. This ensures that the eddy current force is applied most strongly to that portion of the ball which moves the most in the rolling action, i. e., to the face of the ball remote from the points where the ball rests in contact with its track. To this end, the magnetic structure is arranged wholly inside the track of the ball. This magnetic structure comprises a winding 50 which surrounds a tubular core 51, to the ends of which two magnetic discs 40 and 41 are bolted. From the upper disc 40 a suitable number of pole pieces 26_A, 26_B project downwardly, while from the lower disc 41 a corresponding number of pole pieces 27_A, 27_B project upwardly in staggered relationship to those from disc 40. These pole pieces are grouped in pairs, e. g., 26_A with 26_B, and 27_A with 27_B, the pole pieces being arranged around the periphery of the discs in such fashion that each pair of poles of the upper disc 40 lies midway between a pair of poles of the lower disc 41. The second or "B" pole piece of each pair is surrounded with a shading copper strap 42 to produce the rotating component in the magnetic field.

The ball in this embodiment is preferably of non-magnetic conducting material and is driven at less than synchronous speed by the eddy current force exerted by the rotating magnetic component.

Figs. 5 and 6 illustrate still another embodiment of the invention wherein the ball is directly rotated by a variable magnetic field, but wherein such variations of the field are controlled by the ball itself. The contact assembly in this embodiment is like that of Fig. 3 and similar parts are designated by corresponding reference characters. The magnetic field for rotating the ball is provided by a winding 28 of conventional spool form. The magnetic structure is constituted by an iron core 29 and two iron straps 30 and 31 fastened to the ends of such core and bent so that their end portions or pole pieces 32 and 33 lie opposite each other, just outside the track of the ball at two diametrically opposite portions of this track. Thus upon the energization of winding 28 the ball is strongly attracted to the nearer one of the two diametrically opposite positions.

In order to control the energization and de-energization of magnet winding 28 a pair of contactor arrangements 34 are provided, each of which is actuated by a light insulating finger 35, which is pivoted with its free end extending into the track of the ball, so as to be displaced inwardly when the ball arives in the corresponding region of attraction between the pole pieces 32 and 33. These two contactor arrangements are each adapted to open a circuit upon displacement of the corresponding finger 35 and such two con-

tacts are connected in series with one another and with the winding 28. This electrical circuit may be fed by any suitable source of direct current, such as the battery of a telephone exchange.

Normally, the winding 28 is energized and the ball is attracted toward the nearer pair of pole pieces 32, 33. Just before the ball reaches the position of maximum attraction, the movement of the ball displaces the corresponding finger 35 inwardly, thus opening the contacts of the corresponding contactor arrangement 34. The electrical circuit for winding 28 is thus broken, and the magnetic field vanishes, permitting the ball to continue onwardly away from the pole pieces 32, 33 under its own momentum. Each finger 35 is so shaped that the ball passes beyond the end thereof and ceases to force it inwardly somewhat before the time the ball has passed 90° beyond the point of greatest attraction. The inertia of the finger 35 and the restoring force exerted thereon by the contact arrangement 34 causes sufficient delay in reclosing the contacts, so that the ball will have reached substantially the 90° position (midway between the two points of greatest attraction) by the time the contacts have been reclosed and the magnetic field has reached a substantial value. The ball thus continues to rotate in the same direction toward the opposite one of the two regions of maximum attraction, where the same cycle is again repeated.

In the arranegment illustrated in Figs. 5 and 6 the ball is intended to be started manually, or by a suitable starting device when the switch is put in service. The device can, however, be made self-starting, for example, by inclining or warping the track, so that when the power is off, the ball always tends to come to rest in a position where it is ready to enter one of the regions of attraction.

Although certain embodiments of my invention have been described and shown for the purpose of illustration, it will be understood that adaptations, modifications and alterations thereof occurring to one skilled in the art may be made without departing from the scope of the invention as defined in the appended claims.

What is claimed is:

1. A non-numerical continuously operable rotary hunting switch for use in telephone systems comprising an arcuate contact bank including a row of individual stationary contact members and a further stationary arcuate member parallel with and adjacent to said row of individual stationary contact members, a conductive rolling contact member having a circular cross section and means for simultaneously moving said rolling contact member with a rolling motion over said individual stationary contact members and said further arcuate contact member so that each of said individual stationary contact members is electrically connected in turn to said arcuate contact member.

2. A telephone switch in accordance with claim 1 wherein said rolling member is a ball.

3. A telephone switch in accordance with claim 1 wherein said rolling member is moved over said stationary members by a continuously rotating arm.

4. A telephone switch in accordance with claim 1 wherein said rolling member is moved over said stationary members by the direct action of a magnetic field.

5. A telephone switch in accordance with claim 1 wherein said rolling member is moved over said stationary members by the direct action of a magnetic field, said magnetic field being controlled by contacts engaged by said rolling member.

6. A telephone switch in accordance with claim 1 wherein a plurality of rolling members are provided and these are interconnected by an arm which holds said members in a fixed angular relation.

7. A telephone switch in accordance with claim 1 having a plurality of sets of stationary contact members, one above the other, a rolling member for each set and common means for driving said rolling members.

8. A telephone switch in accordance with claim 1 wherein said rolling member is a ball which is rotated by an arm carried by the shaft of an electric motor fixed to means which also supports said stationary members.

9. A non-numerical continuously operable rotary hunting switch for use in telephone systems comprising an arcuate contact bank including a row of individual stationary contact members and a further stationary arcuate contact member parallel with and adjacent to said row of individual stationary contact members, a conductive rolling contact member of magnetic material having a circular cross section, means for generating a magnetic field for moving said rolling contact member by direct action with a rolling motion simultaneously over said individual stationary contact members and said further arcuate contact member so that each of said individual stationary contact members is electrically connected in turn to said arcuate contact member and means for automatically initiating rotation of said rolling member.

10. A telephone switch in accordance with claim 9 wherein said last-named means consists of an auxiliary magnetic field under control of contacts engaged by said rotating member.

11. A telephone switch in accordance with claim 9 wherein said last-named means causes said magnetic field to have a rotating component.

12. A telephone switch in accordance with claim 1 wherein alternate ones of said individual stationary contact members are connected to the lines to be hunted over, the remaining contact members serving as spacers to prevent bridging over between two of said lines.

13. A telephone switch in accordance with claim 1 wherein alternate ones of said individual stationary contact members are connected to the lines to be hunted over, the remaining contact members serving as spacers to prevent bridging over between two of said lines, said spacer contacts being connected together and to a feeder ring making continuous contact with the rolling member.

14. A telephone switch in accordance with claim 1 wherein alternate ones of said individual stationary contact members are connected to the lines to be hunted over, the remaining contact members serving as spacers to prevent bridging over between two of said lines, said spacer contacts being connected together and used as the feeder conductor or common return conductor of the switch.

GERALD DEAKIN.