(19) DANMARK

(10) **DK/EP 3292301 T3**

Patent- og Varemærkestyrelsen

(12) Oversættelse af europæisk patentskrift

(51) Int.Cl.: ***F 03 D 7/02 (2006.01)***

(45) Oversættelsen bekendtgjort den: **2022-03-28**

(80) Dato for Den Europæiske Patentmyndigheds bekendtgørelse om meddelelse af patentet: **2022-03-16**

(86) Europæisk ansøgning nr.: **16720067.4**

(86) Europæisk indleveringsdag: **2016-04-20**

(87) Den europæiske ansøgnings publiceringsdag: **2018-03-14**

(86) International ansøgning nr.: **EP2016058752**

(87) Internationalt publikationsnr.: **WO2016177578**

(30) Prioritet: **2015-05-07 DE 102015208554**

(84) Designerede stater: **AL AT BE BG CH CY CZ DE DK EE ES FI FR GB GR HR HU IE IS IT LI LT LU LV MC MK MT NL NO PL PT RO RS SE SI SK SM TR**

(73) Patenthaver: **Wobben Properties GmbH, Borsigstrasse 26, 26607 Aurich, Tyskland**

(72) Opfinder: **MENDONCA, Angelo, Kurzestrasse 14, 26382 Wilhelmshaven, Tyskland**
MIHOV, Nikolay, Dragshan Str. 2, Entr. B, App.20, 1612 Sofia, Bulgarien
ENGELKEN, Sönke, Rudolf-Alexander-Schröder-Straße 70, 28215 Bremen, Tyskland

(74) Fuldmægtig i Danmark: **Zacco Denmark A/S, Arne Jacobsens Allé 15, 2300 København S, Danmark**

(54) Benævnelse: **Fremgangsmåde til drift af et vindenergianlæg**

(56) Fremdragne publikationer:
EP-A1- 2 775 139
AU-A1- 2014 200 885
DE-A1-102010 014 165
US-A- 5 155 375

Method for Operating a Wind Turbine

The present invention relates to a method for operating a wind power installation. The present invention furthermore relates to a wind power installation. Wind power installations and methods for operating them are known. Wind power installations feed electrical power into an electrical supply network, and are also being used increasingly to support the electrical supply network electrotechnically, where appropriate.

One possibility of such support is that, after a frequency dip, the wind power installation can temporarily feed a higher power into the electrical supply network, which may for simplicity also be referred to merely as the network, which is higher than the wind power installation can generate on the basis of the prevailing wind conditions at that time. Specifically, in addition to the power which is generated from the wind, electrical power from the kinetic energy of the rotor is also used therefor. This involves, in particular, the aerodynamic rotor of the wind power installation as well as an electromagnetic rotor, coupled thereto, of the generator. This applies in particular for gearless wind power installations in which the rotor of the generator is coupled directly to the aerodynamic rotor and the rotor also has a significant moment of inertia. This kinetic energy of the rotor affects all these rotating parts.

In any event, the feeding of this kinetic energy leads to the speed of the rotor being reduced. After this supporting measure is over, or can be ended, the wind power installation should return to its normal operating state. In simple terms, for the assumption of constant wind speed over the period of time considered, this means that the rotational speed must be increased again, and the electrical power of the generator must to this end necessarily lie below the driving power generated by the aerodynamic rotor for a certain period of time, and can therefore only be increased again slowly.

Such a rotational speed increase, i.e. returning the installation to the normal operating state, may however entail problems. Firstly, there is always the risk that the wind power installation, in this low rotational speed operating state which has occurred unavoidably, may also be in an aerodynamically less effective operating state. The installation must correspondingly be operated carefully in this state, which also applies for returning to the normal operating state. Furthermore, the reduction of the electrical power for the purpose of reacceleration may under certain circumstances have detrimental effects on the network, which after the previous disturbance still relies on a maximally constant and high power input from the wind power installation.

In the priority application for the present application, the German Patent and Trademark Office has investigated the following prior art documents: DE 10 2009 014 012 A1, DE 11 2005 000 681 T5 and WO 2011/124696 A2. Furthermore the International Searching Authority has investigated the documents EP 2 775 139 A1 and US 5 155 375 02 A.

The object of the present invention is therefore to address at least one of the problems mentioned above and to provide a solution. In particular, an advantageous way of returning a wind power installation as favourably as possible into the normal operating state after such a rotational speed reduction, due to network support by feeding in increased power, is intended to be presented. At least, an alternative solution to the hitherto known solutions is intended to be provided.

According to the invention, a method according to Claim 1 is provided. This claim relates to a method for operating a wind power installation, which is conventionally also abbreviated to WPI, comprising a generator. Advantageously, with this method, electrical power is fed into an electrical supply network. Now, the situation is taken into account in which, after a first operating state with a first power output and a first rotational speed, a change is intended to be made to a second operating state with a second power output and a second rotational speed. The method in this case relates in particular to the situation in which the first operating state is an operating state of increased power output, and the intention is to return therefrom in a controlled way into a normal operating state. The normal operating state in this case constitutes the second operating state. This operating state of increased power output is one in which the wind power installation has temporarily output more power than it was able to generate on the basis of the prevailing wind conditions. The wind power installation has therefore also output stored power as a supplement in addition to the power generated from the wind. This has been taken from the kinetic energy of the rotation of the rotor of the wind power installation and the rotor of the generator, so that the rotational speed has then become lower.

From this operating state of increased power output, which specifically has then ended or is then ended, the intention is to return to the normal operating state. This normal operating state is intended to mean the one in which the amount of power fed into the electrical network is that which the wind power installation can generate from the wind on the basis of the prevailing wind conditions. This relates essentially to feeding into the electrical supply network the power, or amount of power, which the wind power installation has been able to draw from the wind, less power used in another way therefrom. This power used in another way relates, when using an externally excited synchronous machine, particularly

also to the provision of the corresponding excitation current. Other or further power outputs may, however, also be envisaged.

In any event, the wind power installation is intended to be returned in a controlled way from this operating state of increased power output, and therefore reduced rotational speed, into this normal operating state with the power output matched to the wind and a rotational speed matched thereto. In this case, the power regularly also decreases strongly after or at the end of this operating state of increased power.

To this end, it is proposed initially to determine an aerodynamic power available for the feed. This available aerodynamic power is one which is initially based on the aerodynamic power that can be drawn from the wind, but is reduced by power that is needed in another way before being fed in. For simplicity, this will be referred to below as the available power. From this available power, i.e. the power determined as available power, a setpoint rotational speed is then determined. Thus, the last rotational speed before this supporting measure, i.e. the rotational speed which there was shortly before the wind power installation fed in an increased power, is not simply used, but rather it is determined as a function of this available power.

Once this setpoint rotational speed has been determined, a setpoint power to be adjusted at the generator is specified as a function thereof. The installation can then control the installation on the basis of the setpoint power. This setpoint power, which may in this case regularly be tracked, thus specifies the regulating objective which ultimately leads to this normal operating state.

Thus, by taking into account the actual situation on site, controlled return into the normal operating state can now be carried out. In this case, it should also be noted that the available aerodynamic power at the respective instant depends not exclusively on the prevailing wind conditions, but also on the existing rotational speed of the wind power installation, which according to the invention is detected and taken into account. In particular, it may be that, owing to the reduced rotational speed, there is a lower tip-speed ratio, which is in turn not optimal and therefore not as much power can be drawn from the wind as would be the case at that instant with an optimal tip-speed ratio. This is also taken into account by the proposed method.

However, in particular the controlled change, especially controlled return, from a first operating state into the second operating state may be envisioned, in which the first does not have the optimal power output or the optimal rotational speed for other reasons. In this

case, the second operating state may also have a higher rotational speed than the first. A controlled change is then made from a higher rotational speed to a lower rotational speed.

The first and second rotational speeds and the first and second power outputs are in principle different, although the case may arise that the first and second power outputs are equal.

According to one embodiment, it is proposed that the available power is determined from a rotational speed of the generator and the power fed into an intermediate electrical storage unit, in particular a DC voltage intermediate circuit. In this way it is also possible, for the available power, to take into account the rotational speed of the generator and to use information from this intermediate storage unit.

Preferably, a wind power installation is based on a so-called full installation concept. In this case, all power generated by the generator is rectified and put into the DC voltage intermediate circuit, which then forms the intermediate electrical storage unit. Then, by means of a power inverter, feed into the electrical supply network is carried out from this DC voltage intermediate circuit. To this extent, the power fed into the DC voltage intermediate circuit, or another intermediate storage unit, can give information about the available power. In this case, it has been discovered that information about the available aerodynamic power can be derived by jointly taking the rotational speed of the generator and this power in the intermediate storage unit into account.

According to one embodiment, it is proposed that the available power is determined by a state observer. In this way, by a system or subsystem established in the observer, even a not directly measurable variable can be recorded. A poorly measurable variable, the measurement of which is for example inaccurate or affected by noise, may also be recorded better by the observer.

Preferably, the state observer has the rotational speed of the generator and the mechanical torque of the generator as state variables to be observed. The rotational speed of the generator may conventionally be recorded by measurement technology, and is often also available as a measured variable. By taking it into account as a state variable in the state observer, however, it is possible to improve the measurement quality. In particular, the measurement quality can be adapted in terms of accuracy and dynamic response to the requirements for the intended recording of the available power. This is possible in particular by parameterization of the observer, in particular by the parameter k_ω, which will also be explained below.

Taking into account the mechanical torque of the generator as a state variable in the state observer has, in particular, the advantage that this variable is not, or not readily, recordable by measurement technology but at the same time is highly suitable for determining the available power. By virtue of such a state observer, the rotational speed of the generator and the mechanical torque of the generator are therefore available as variables that can be used directly for the further determination. The state observer may determine these variables, and make them available, at each sampling step and therefore also in an online implementation.

Preferably, the state observer is defined by the following structure, which is given here as follows as a system description in matrix representation:

$$\begin{bmatrix} \dot{\hat{\omega}} \\ \dot{\hat{T}}_{mech} \end{bmatrix} = \begin{bmatrix} -k_\omega & \frac{1}{J} \\ -k_T & 0 \end{bmatrix} \begin{bmatrix} \hat{\omega} \\ \hat{T}_{mech} \end{bmatrix} + \begin{bmatrix} k_\omega & -\frac{1}{J} \\ k_T & 0 \end{bmatrix} \begin{bmatrix} \omega \\ T_{el} \end{bmatrix}$$

in which

- J denotes the combined moment of inertia of the rotor and generator,
- ω is the rotational speed of the generator,
- $k\omega$ and k_T are parameters for influencing the dynamic response of the observer,
- T_{el} is referred to as an electrical torque and is calculated as the ratio of the power P_{DC} fed into a or the intermediate electrical storage unit and the rotational speed ω, and
- T_{mech} denotes the mechanical torque of the rotor and the generator, wherein

the observed variables are marked with a ^ symbol and the available power to be determined is calculated as the product of the observed rotational speed $\hat{\omega}$ and the observed mechanical torque $\hat{T}_{mech}$.

J therefore denotes the combined moment of inertia of the rotor and the generator, which to this extent implies a gearless wind power installation in which the rotor of the generator is mechanically coupled directly to the aerodynamic rotor. Ultimately, this moment of inertia naturally involves everything which is coupled firmly to the rotor and the rotor of the generator and rotates together. However, all such elements, for example the rotor hub, could also be part of the rotor. In principle, however, in the case of a geared wind power

installation, the part of the moment of inertia of the generator could be calculated into this total moment of inertia by means of a corresponding transmission ratio.

The rotational speed ω of the generator is in this gearless concept correspondingly at the same time the rotational speed of the rotor firmly connected thereto. The parameters k_ω and k_T are parameters for influencing the dynamic response of the observer, and their effect is given by the understanding of the formula indicated. In particular, the parameter k_ω influences tracking of the observed rotational speed $\hat{\omega}$ as a function of the difference between that observed $\hat{\omega}$ and that measured ω. The same difference is influenced by means of the parameter k_T for the tracking of the mechanical torque $\hat{T}_{mech}$.

With this state observer, these two states, namely the rotational speed ω and the mechanical torque T_{mech} can therefore also be determined by a comparatively simple structure.

The electrical torque T_{el} is calculated here as a ratio of electrical power fed into the intermediate storage unit and the rotational speed ω. The following equation thus applies:

$$T_{el} = \frac{P_{DC}}{\omega}$$

The rotational speed ω is measurable, although in this case the observed rotational speed $\hat{\omega}$ of the state observer may also be used. The power P_{DC} fed into the intermediate storage unit, in particular the DC voltage intermediate circuit, can be recorded or measured, and is generally known in the full installation, or the associated or contained control, and exists as a variable there.

The available power to be determined can now simply be calculated as a product of this observed rotational speed $\hat{\omega}$ and the observed mechanical torque $\hat{T}_{mech}$. This represents the aerodynamic power available for feeding in at the relevant instant. This available power then forms the starting point from which a setpoint rotational speed, and from this a setpoint power to be set at the generator, is specified, as already explained above with the aid of some embodiments.

The state observer thus also determines the available power in real time, and a setpoint power to be set at the generator, which differs from this available power, is only determined therefrom.

According to one embodiment, the setpoint rotational speed may be determined as a function of a rotational speed/power characteristic curve. Such a rotational speed/power characteristic curve therefore indicates a predefined relationship between rotational speed and power, and is used so that an associated power value can be selected for an existing rotational speed, or a desired rotational speed. This may be based on a normal rotational speed/power characteristic curve which is conventionally used in the wind power installation control, or a special rotational speed/power characteristic curve may be used as a basis for this application.

According to another embodiment, the use of a regulator is provided so that the setpoint power is determined from the available power and the actual rotational speed of the generator.

Preferably, to this end a difference between the setpoint rotational speed and the actual rotational speed is initially formed. The actual rotational speed observed by the state observer may in this case be used as the actual rotational speed. This difference of the rotational speed, i.e. of the generator rotational speed, may also be referred to here as a system deviation.

From this difference of the setpoint and actual rotational speeds, a differential torque, which determines the difference between the observed mechanical torque and the electrical torque, is determined by means of a regulating algorithm. In the simplest case, this may be carried out by means of a P regulator, but preferably by means of a PI regulator or by means of a PID regulator.

To this differential torque determined in this way, which to this extent also initially represents an internal regulatory variable, the observed mechanical torque is added and this sum forms a setpoint torque.

The setpoint torque may also be delivered to the control of the wind power installation, the setpoint power being calculated before or even in the control of the wind power installation from the setpoint torque by multiplication by the actual rotational speed. Here again, the actual rotational speed observed in the state observer, or the measured one, may be used for the actual rotational speed.

The control or regulation provided in any event in the wind power installation then implements this setpoint power so that the wind power installation operates at an operating point which is intended to have this setpoint power as an actual power immediately, or

tracks the operating point to this setpoint power, which is also varied. Correspondingly, a new actual rotational speed is also set up, which is used further by this regulator as explained in the introduction.

With the aid of this embodiment, a basic concept of the invention will be explained again by way of example. After a network support, the wind power installation is in an operating state with reduced rotational speed. The power delivered was previously increased and must now decrease rapidly in order to achieve reacceleration. The wind power installation should now be returned as far as possible into a normal operating state, and a particularly advantageous, in particular expediently controlled return into this normal operating state is proposed here. As a basis for this controlled return, the available power is determined, which may be carried out particularly favourably by means of a state observer. On the basis of this determined available power, a setpoint power to be set up is determined, in particular by means of a dynamic process, and delivered to the installation control as a specification value. This setpoint power is generally itself also dynamic, and the installation should ultimately be returned to this normal operating point while varying in this case, so that the output values for this proposed return also vary.

In particular, the installation actually coming to a standstill because of an uncontrolled return, or an uncontrolled attempt at a return, is also prevented in this case. This could, for example, happen when a power is demanded which is too great for the wind power installation to draw from the wind at that instant and in its current operating state, and could therefore be braked further, which would further exacerbate the situation until in the extreme case the installation comes to a stop.

A preferred aim is also that the power does not initially decrease too greatly, since this could again lead to a case of disruption in the network.

This method is therefore particularly useful for an operating state in which the wind power installation has reduced its rotational speed, and subsequently also its power, because of a previously elevated power output. In principle, however, this method may also be envisaged when the installation is in an operating state of lower rotational speed because of other circumstances, for example other specifications of the network operator or statutory regulations. That is to say, it is in a state in which the rotational speed is less than would be conventional or normal under the prevailing wind conditions.

A further application is continuous operation, i.e. operation of a wind power installation with rotational speed regulation in order to achieve an optimal working point for the respective current wind speed.

It has now been discovered that such a state observer for determining the available power, i.e. for determining an aerodynamic power available for feeding in, is also advantageous when this available power is not, or not only, used for returning the wind power installation to a normal operating state in a controlled way. The invention also provides a wind power installation which can be returned in a controlled way from a first operating state into a second operating state, particularly into a normal operating state, by a method according to one of the embodiments explained above.

Preferably, the wind power installation comprises a return control unit, in which the method for returning to the normal operating state is implemented and can be carried out. The return control unit can therefore change in a controlled way from a first operating state to a second operating state. Such a return control unit is preferably linked to an operational control unit of the wind power installation, or may form a part thereof.

The invention will be explained in more detail below by way of example with the aid of exemplary embodiments with reference to the appended figures.

Figure 1 shows a wind power installation in a perspective representation.

Figure 2 shows a structure for specifying the setpoint power to illustrate a proposed method.

Figure 3 illustrates a rotational speed regulating structure in a block diagram.

Figure 4 shows a plurality of diagrams to illustrate a process of a frequency dip with the sequence and effect of support by a wind power installation.

Figure 5 shows, in a similar way to Figure 4, diagrams to illustrate the sequence of a frequency dip together with support by a wind power installation, in which in contrast to Figure 4 a variable setpoint value can be adjusted for the supporting power.

Figure 6 shows simulated power profiles for the return of the power to the normal power and therefore to the normal operating point according to one embodiment of the invention and in comparison with another embodiment.

Figure 1 shows a wind power installation 100 having a tower 102 and a gondola 104. A rotor 106 having three rotor blades 108 and a spinner 110 is arranged on the gondola 104. During operation, the rotor 106 is set in a rotational movement by the wind and thereby drives a generator in the gondola 104.

Figure 2 shows a block diagram 2 for the specification of a setpoint power $P_{setpoint}$, which is intended to be provided to the wind power installation as a power setpoint value in order to return the wind power installation to a normal operating point on the basis thereof. This block diagram 2 schematically shows the sequence in an overview.

As input variables, a power P_{DC} fed into a DC electrical voltage intermediate circuit and the rotational speed ω of the generator are fed into the power observer 4 at its input 6. This power observer 4 is a state observer, which can have the rotational speed of the generator and the mechanical torque of the generator as observed state variables. As a result, the available power $\hat{P}_{avaDC}$ is obtained, which is also referred to as the aerodynamic power available to be fed in. The index of this observed power $\hat{P}_{avaDC}$ also indicates that it relates to the DC voltage intermediate circuit. Specifically, this power is that which, although it depends on the prevailing wind speed and also on the current operating state of the wind power installation, i.e. it depends on how much power can be drawn from the wind, nevertheless also already takes into account that a part of this power that can be drawn from the wind is being used in another way, in particular for excitation of the generator or for covering the losses during the energy conversion in the generator. This available power $\hat{P}_{avaDC}$ therefore describes a power which is actually available and could be fed into the electrical supply network by the power inverter.

To this extent, although this available power is that which is available at the intermediate circuit, it nevertheless differs from the power fed into the intermediate circuit in that it is continuously available because of continuous replenishment from the wind and would not lead to a change in the rotational speed of the wind power installation.

From this available power $\hat{P}_{avaDC}$, a setpoint rotational speed $\omega_{setpoint}$ is then determined in a characteristic curve block 8 in which a rotational speed/power characteristic curve is stored. This setpoint rotational speed is an input variable for the rotational speed regulator in the rotational speed regulator block 10, which will be explained further in Figure 3.

The available power $\hat{P}_{avaDC}$ is likewise an input variable for the rotational speed regulator in block 10, and the rotational speed is also a further input variable for this rotational speed regulator in the rotational speed regulator block 10. In this case, the measured rotational speed or the rotational speed present as an estimated state variable in the power observer 4 may be used.

The rotational speed regulator in block 10 then generates the setpoint power for the wind power installation at its regulator output 12 in a dynamic process.

Figure 3 illustrates a rotational speed regulator in the sense of the rotational speed regulator block 10. Correspondingly, the setpoint rotational speed $\omega_{setpoint}$, the actual rotational speed ω and, indirectly, the available power are also taken into account here as input variables. The available power is not indicated in Figure 3, but the available mechanical torque $\hat{T}_{mech}$ is related thereto and indirectly forms a corresponding input variable.

The setpoint rotational speed may initially be fed through a digital filter 30, which may for example be a first-order low-pass filter. A regulator structure with two degrees of freedom can be formed in this way, which allows an improvement of the robustness of the regulating loop in relation to modelling inaccuracies of the regulating path for consistently good setpoint value tracking performance. The converse case, i.e. that there is good robustness with good modelling accuracy but not so good setpoint value performance, should also be mentioned here.

A difference between the setpoint and actual values of the rotational speed is then formed in the difference block 32. This difference is sent to the regulating block 34, which determines the corresponding differential torque therefrom by means of a regulating algorithm. The regulating algorithm may, in particular, comprise a P structure, a PI structure or a PID structure.

The differential torque determined in this way is added to the observed mechanical torque $\hat{T}_{mech}$ at the adder component 36 so that a setpoint torque is obtained from $T_{setpoint}$, which can be transmitted as an input variable and specified variable to the control of the wind power installation. This is represented by the wind power installation block 38. The calculation of the setpoint power $P_{setpoint}$ by multiplying the setpoint torque $T_{setpoint}$ by the rotational speed ω may also be carried out in the wind power installation block 38.

Correspondingly, the wind power installation is thus regulated in the wind power installation block 38, and the wind power installation per se is also contained therein and ultimately delivers as output the physical variable of its rotational speed, i.e. the rotational speed ω of the generator, which is fed back to the difference component 32. The difference component 32 may naturally also be referred to as an adder component 32 with negative input.

The field of application of the invention is concentrated on the use of wind power installations for network support in the event of frequency dips, for example in the event of power station outages. The power observer may in this context also be used as a basis for various other regulating algorithms for a wind power installation, for example for reserved power regulation or optimized regulation of the working point during normal operation of the wind power installation.

The invention has particularly the object of making the conduct of a network support by power increase even more compatible than before, and in particular to keep the reduction of the effective power after the end of the power increase as small as possible. In this way, a further disruption of the energy system power balance is restricted to a minimum amount.

A return to an optimal working point after the end of a power increase is schematically represented in Figure 4, which shows a typical behaviour.

Figure 4 represents as a function of time t the wind speed v, the network frequency f, the rotational speed n, which may also be denoted as ω, and the power P fed in. At time t_0, the frequency dip occurs, or is detected. The frequency f therefore dips, the power P is set far above the previous value, and kinetic energy is used for this, with the result that the rotational speed n decreases slowly. It is assumed that the wind speed is essentially constant over the entire period of time studied.

The network support by the increased power input ends at the time t_1, at which the power P then falls slowly, namely previously greatly below the previous value and therefore also greatly below the amount possible because of the existing wind speed.

At time t_2, the power then gradually increases again. The rotational speed n then increases again gradually as well.

At time t_3, the conditions have been normalized again and the operating point is a normal operating point, with a power P fed in and a rotational speed n as before the frequency dip. In the example, however, the frequency f has already recovered significantly earlier.

As represented in Figure 4, the power setpoint value of the wind power installation (WPI) is therefore reduced after the end of the adjusted power increase duration over the period of time $t_{inertia,\ lead,\ back}$. After the end of this period of time, i.e. for instance at the time t_2, the power setpoint value is at the value which is assigned to the current rotational speed according to a firmly preadjusted rotational speed/power characteristic curve. Since, however, the rotational speed is too low relative to an optimal value for the current wind conditions because of the braking effect of the previous power increase, this power setpoint value does not correspond to the aerodynamic power currently being caused by the wind. Instead, the power setpoint value often lies significantly below the effective power level delivered before the initiation of the network support, to which References [1, 2] also relate. Because of the great reduction of the effective power, the wind power installation (WPI) accelerates within a few seconds back to a higher rotational speed and returns to a normal operating behaviour. From the point of view of the energy system, however, such a great reduction of the effective power output is to be evaluated as a new disruption, and is therefore to be reduced as far as possible; Reference [1] also relates to this.

A power increase with a variable setpoint value is represented in Figure 5.

The profiles and conditions of Figure 5 correspond to those of Figure 4, and reference is therefore made to Figure 4 for explanations. The essential difference of the behaviour according to Figure 5 is that in the case of the frequency dip at t_0, the power fed in is initially increased very gradually to a starting power, but the starting power is not maintained but lies approximately by a constant differential value above a fictitious power assigned to the decreasing rotational speed n. This fictitious power is indicated in Figure 5, as well as in Figure 4, respectively by dashes in the lower diagram.

As a result, however, the power dip behaves here very similarly as explained with reference to Figure 4.

One published method is that which is referred to as “Dynamic Inertia Regulation” by Repower Systems according to Reference [3]. In this method, control of the return of the wind power installation (WPI) from a working point with a reduced rotational speed to an optimal working point, which may also be referred to as a normal working point, is carried out by the specification of a setpoint rotational speed gradient, or a gradient corridor defined by minimum and maximum gradients. This accordingly leads to a constant difference between the aerodynamic and electrical torques during the period of the return. One disadvantage of this method is the use of a rotational speed gradient in the context of the regulating method. This requires a high-quality measurement of the rotational speed signal,

so that a numerical derivation is not unsuitable because of an excessively high noise level for the regulation.

Otherwise, strong filtering of the rotational speed signal or, similarly to the method according to the invention, the use of a state observer for the rotational speed and/or its derivation, could be a solution. This, however, is not described in Reference [3].

Figure 6 shows a comparison of the simulated power profiles for a known method P_{old} and for a method proposed according to the invention P_{new}, which is parameterized for a return duration of about 60 s with a wind speed v_W = 8.5 m/s. It can be seen that the power P_{new} according to the method proposed according to the invention decreases much less after the end of the power increase at t_1 than the power P_{old} according to the comparative method.

The object of the invention is therefore to reduce the power reduction of the wind power installation (WPI) after the end of the power increase during the network support and controllability of the duration of the return to the optimal working point of the wind power installation (WPI).

A particular intention is to achieve controllability of the depth of the power dip after the end of the network supporting power increase phase by adjustability of a setpoint value filter in the regulating method, and, with suitable parameterization of the filter, i.e. the state observer, significant reduction of the power dip compared with previously known methods and therefore a reduction of destruction of the power balance nonequilibrium in the energy system in question.

Referring to the embodiments and results explained in detail, but also in a way which may be generalized, the following will also be added for explanation.

The invention relates to a method for network support by wind power installations, which are abbreviated to WPI, in the event of a significant dip of the network frequency. The possibility of temporarily increasing the delivered effective power of a wind power installation in such a case is known, and will be referred to here as support.

The effective power increase in response to a network frequency dip may be carried out over an adjustable period of time and with a particular established increase relative to the effective power at the time when the support is initiated.

The consequence of an increased effective power output is typically a reduction of the rotational speed of the WPI compared with the moment before initiation of the support. This may be represented illustratively with the aid of the acceleration equation of a rotating one-mass system:

$$J\dot{\omega} = T_{mech} - T_{el} = \frac{1}{\omega}(P_{mech} - P_{el})$$

In this formula, J denotes the moment of inertia of the rotating masses of the WPI, ω denotes the rotational speed of the WPI, T_{mech} and P_{mech} respectively denote the torque and the power occurring on the shaft because of the wind, and T_{el}/P_{el} denote the electromechanical torque, or the power, of the generator. If a generator power which exceeds the mechanical power is drawn over a period of time, braking of the WPI takes place.

This inequality of the power balance occurs with an approximately constant wind speed during a support event. The effect is further exacerbated because the aerodynamic efficiency of the WPI may deteriorate with a decreasing rotational speed and constant wind speed relative to an optimal working point before the start of the support function. An optimal working point is achieved with a particular tip-speed ratio, i.e. the ratio of the speed of revolution of the blade tip to the wind speed. The decrease of the tip-speed ratio during the initiation of support typically leads to a decreasing aerodynamic power with a constant wind speed. After the end of the power increase, the WPI is thus often at a suboptimal working point in terms of rotational speed and wind speed, i.e. the rotational speed is too low in relation to the wind speed, so that the tip-speed ratio is not optimal. The problem thus arises of subsequently reaccelerating the WPI in order to reach a higher rotational speed and, in association therewith, higher aerodynamic efficiency. To this end, various options may be selected:

- A strong reduction of the effective power output after the end of the supporting power increase, which leads to a rapid acceleration of the WPI and therefore a rapid return to an optimal working point. Reference [2] relates to this.

- A small reduction of the effective power output after the end of the supporting power increase, which leads to a slow acceleration or, in the event of too little reduction, even further braking of the WPI.

In terms of frequency stability in an energy system, the latter option is advantageous, which Reference [1] also relates to. A strong reduction of the effective power by a large number

of WPIs in an energy system is equivalent to another disruption of the power balance of this energy system. Often, it is precisely such a disruption of the power balance, which is caused for example by a failure of a power station or a line, that was responsible for a frequency dip and therefore for the initiation of the support function. It is therefore appropriate to limit the power reduction to a minimum extent, so that the rotational speed of the WPI does not decrease further but can be increased in a controlled way and over a more prolonged period of time back to the optimal rotational speed.

The invention described here describes a solution for returning the WPI to an optimal operating point after the end of a supporting power increase with the least possible power reduction in relation to the effective power delivered by the initiation of support. To this end, a method which is graphically represented in Figure 2 is provided.

For each measurement, the values of rotational speed (ω) and power in the DC intermediate circuit (P_{DC}) are recorded. From these, with the aid of a state observer, an available aerodynamic power relating to the intermediate circuit ($\hat{P}_{avaDC}$) is calculated, i.e. it corresponds to the aerodynamic power less the generator losses. For this available power, a setpoint rotational speed ($\omega_{setpoint}$) is calculated by means of a characteristic curve. By using the calculated available power $\hat{P}_{avaDC}$, a power setpoint value is finally output by a rotational speed regulator. This is converted by the existing power regulating software of the WPI into a control signal for the electrically excited generator, which leads to the WPI reaching the setpoint rotational speed over a parameterizable period of time. The individual method components will now be described separately:

For the power observer and on the basis of Equation (1), the following state space model of the WPI can be set up, with the state variables rotational speed (ω) and mechanical torque (T_{mech}):

$$\begin{bmatrix} \dot{\omega} \\ \dot{T}_{mec} \end{bmatrix} = \begin{bmatrix} 0 & \frac{1}{J} \\ 0 & 0 \end{bmatrix} \begin{bmatrix} \omega \\ T_{mech} \end{bmatrix} + \begin{bmatrix} -\frac{1}{J} \\ 0 \end{bmatrix} T_{el}$$

Of the variables used here, the mechanical torque T_{mech} cannot be measured and therefore needs to be calculated from the measurement data by means of a state observer. Since the rotational speed signal is furthermore often measured only with a low resolution and with a low sampling rate, a state observation is also proposed for this value. A suitable observer structure may be formulated as follows, reference being made to Reference [4] for further explanation:

$$\begin{bmatrix} \dot{\hat{\omega}} \\ \dot{\hat{T}}_{mech} \end{bmatrix} = \begin{bmatrix} -k_\omega & \frac{1}{J} \\ -k_T & 0 \end{bmatrix} \begin{bmatrix} \hat{\omega} \\ \hat{T}_{mech} \end{bmatrix} + \begin{bmatrix} k_\omega & -\frac{1}{J} \\ k_T & 0 \end{bmatrix} \begin{bmatrix} \omega \\ T_{el} \end{bmatrix}$$

Here, in contrast to the measured input variables of rotational speed ω and the electrical torque $T_{el} = \frac{P_{DC}}{\omega}$, observed variables are denoted by ^. The two parameters k_ω and k_T influence the dynamic behaviour and, with time-discrete implementation, also the stability of the state observer, and must be selected while taking these aspects into account.

The calculation of the aerodynamic power $\hat{P}_{avaDC}$ is carried out by means of the product of rotational speed and torque.

Regarding the characteristic curve, it should be explained that

this component assigns a setpoint rotational speed $\omega_{setpoint}$ to each calculated available power $\hat{P}_{avaDC}$, for example by means of a static characteristic curve.

The rotational speed regulator must achieve a return of the WPI to the calculated setpoint rotational speed while taking into account an effective power reduction which is as small as possible. Its structure is represented in Figure 3 in the form of a simplified block diagram. The rotational speed error is calculated, and a differential torque between the observed mechanical torque and the electrical torque is calculated therefrom by means of a P/PI/PID regulator C. This is added to the observed mechanical torque, and a setpoint torque, or after multiplication by the current rotational speed a setpoint electrical power, is therefore calculated.

Preferably, the setpoint rotational speed is filtered by a digital filter F, for example a first-order low-pass filter, before calculation of the rotational speed error. This gives rise to a regulator structure with two degrees of freedom, which allows an improvement of the robustness of the regulating loop in relation to modelling inaccuracies of the regulating path for consistently good setpoint value tracking performance or vice versa. The duration of the return of the WPI from the reduced rotational speed to the setpoint rotational speed may be adjusted according to the desired requirements through the selection of a parameter of the filter F. For example, a stabilization time of the regulating loop of 60 s is a preferred selection.

Besides the reduction of the power dip in the recovery phase, the described power observer also allows a further option for the increase of the power after the detection of a frequency dip. In this case, the power may be increased by a fixed value relative to the time-variable

“normal” rotational speed-dependent power setpoint value. Here, with the power observer, there is the possibility for this of using the calculated aerodynamic power, rather than as previously a rotational speed-dependent power setpoint value, as a reference for the power increase.

The invention, at least according to one embodiment, has the object of making the conduct of a network support by support after a frequency dip particularly compatible for the energy system, and in particular to keep the reduction of the effective power after the end of the power increase as small as possible. In this way, a further disruption of the energy system power balance is restricted to a minimum amount.

Patentkrav

1. Fremgangsmåde til drift af et vindenergianlæg (WEA,100), der omfatter en generator, til tilførsel af elektrisk effekt til et elektrisk forsyningsnet, hvor der efter en første driftstilstand med en første effektafgivelse og et første omdrejningstal styres til en anden driftstilstand med en anden effektafgivelse og et andet omdrejningstal, **kendetegnet ved, at** der til styring til den anden driftstilstand

- bestemmes en aerodynamisk effekt ($\hat{P}_{ava\ Dc}$), der er tilgængelig til tilførsel, hvor den tilgængelige effekt ($\hat{P}_{ava\ DC}$) fastslås ud fra et omdrejningstal (ω) af generatoren og effekten (P_{DC}), der tilføres til et elektrisk mellemlager, især et jævnspændingsmellemkredsløb,
- ud fra denne tilgængelige effekt bestemmes et indstillingsomdrejningstal (ω_{soll}), og
- ud fra indstillingsomdrejningstallet forudbestemmes en indstillingseffekt (P_{soll}), der skal indstilles på generatoren.

2. Fremgangsmåde ifølge krav 1, **kendetegnet ved, at** den tilgængelige effekt fastslås ved hjælp af en tilstandsobservatør (4).

3. Fremgangsmåde ifølge et af de foregående krav, **kendetegnet ved, at** tilstandsobservatøren eller en tilstandsobservatør (4), der anvendes til at fastslå den tilgængelige effekt ($\hat{P}_{ava\ DC}$), har generatorens (ω) omdrejningstal og generatorens mekaniske omdrejningsmoment (T_{mech}) som tilstandsstørrelser, der skal observeres.

4. Fremgangsmåde ifølge et af de foregående krav, **kendetegnet ved, at** tilstandsobservatøren eller en tilstandsobservatør (4), der anvendes til at fastslå den tilgængelige effekt, er defineret af strukturen:

$$\begin{bmatrix} \dot{\hat{\omega}} \\ \dot{\hat{T}}_{mech} \end{bmatrix} = \begin{bmatrix} -k_\omega & \frac{1}{J} \\ -k_T & 0 \end{bmatrix} \begin{bmatrix} \hat{\omega} \\ \hat{T}_{mech} \end{bmatrix} + \begin{bmatrix} k_\omega & -\frac{1}{J} \\ k_T & 0 \end{bmatrix} \begin{bmatrix} \omega \\ T_{el} \end{bmatrix}$$

hvori

- J betegner rotorens og generatorens fælles træghedsmoment,
- ω er omdrejningstallet for generatoren,
- k_ω og k_T er parametre til påvirkning af observatørens dynamik,

- T_{el} betegnes som elektrisk omdrejningsmoment og beregnes som kvotient af tilført effekt P_{DC} til et elektrisk mellemlager eller det elektriske mellemlager og omdrejningstallet ω, og
- T_{mech} betegner rotorens og generatorens mekaniske omdrejningsmoment, hvor

de observerede størrelser er markeret med et ^-tegn, og den til rådighed stående effekt, som skal fastslås, beregnes som produkt af observeret omdrejningstal $\hat{\omega}$ og observeret mekanisk omdrejningsmoment $\hat{T}_{mech}$.

5. Fremgangsmåde ifølge et af de foregående krav, **kendetegnet ved, at** indstillingseffekten (P_{soll}) fastslås i en regulator (10) ud fra den tilgængelige effekt og generatorens faktiske omdrejningstal (ω).

6. Fremgangsmåde ifølge et af de foregående krav, **kendetegnet ved, at** et indstillingsomdrejningstal (ω_{soll}) bestemmes afhængigt af den tilgængelige aerodynamiske effekt ud fra en omdrejningstal-effekt-karakteristik (8).

7. Fremgangsmåde ifølge et af de foregående krav, **kendetegnet ved, at** der i en regulator eller regulatoren (10)
- dannes en difference mellem indstillingsomdrejningstallet (ω_{soll}) og det faktiske omdrejningstal (ω), især det observerede faktiske omdrejningstal ($\hat{\omega}$),
- ud fra differencen via en reguleringsalgoritme bestemmes et differenceomdrejningsmoment (T_{diff}) mellem det observerede mekaniske omdrejningsmoment ($\hat{T}_{mech}$) og det elektriske omdrejningsmoment (T_{el}),
- ud fra summen af differenceomdrejningsmomentet og det observerede mekaniske omdrejningsmoment beregnes et indstillingsomdrejningsmoment (T_{soll}) og
- indstillingseffekten beregnes ud fra indstillingsomdrejningsmomentet ved multiplikation med det faktiske omdrejningstal.

8. Fremgangsmåde ifølge et af de foregående krav, **kendetegnet ved, at** den første driftstilstand er en driftstilstand med forøget effektafgivelse, hvor vindenergianlægget kortvarigt har afgivet mere effekt end det kunne generere på grund af de fremherskende vindbetingelser.

9. Vindenergianlæg (100) med en generator til tilførsel af elektrisk effekt til et elektrisk forsyningsnet, hvor vindenergianlægget er indrettet til efter en første driftstilstand med en første effektafgivelse og et første omdrejningstal at styre til en anden driftstilstand med en anden effektafgivelse og et andet omdrejningstal og til udførelse af fremgangsmåden ifølge et af kravene 1 til 8 omfatter en tilbageføringsstyreenhed, hvori fremgangsmåden er implementeret.

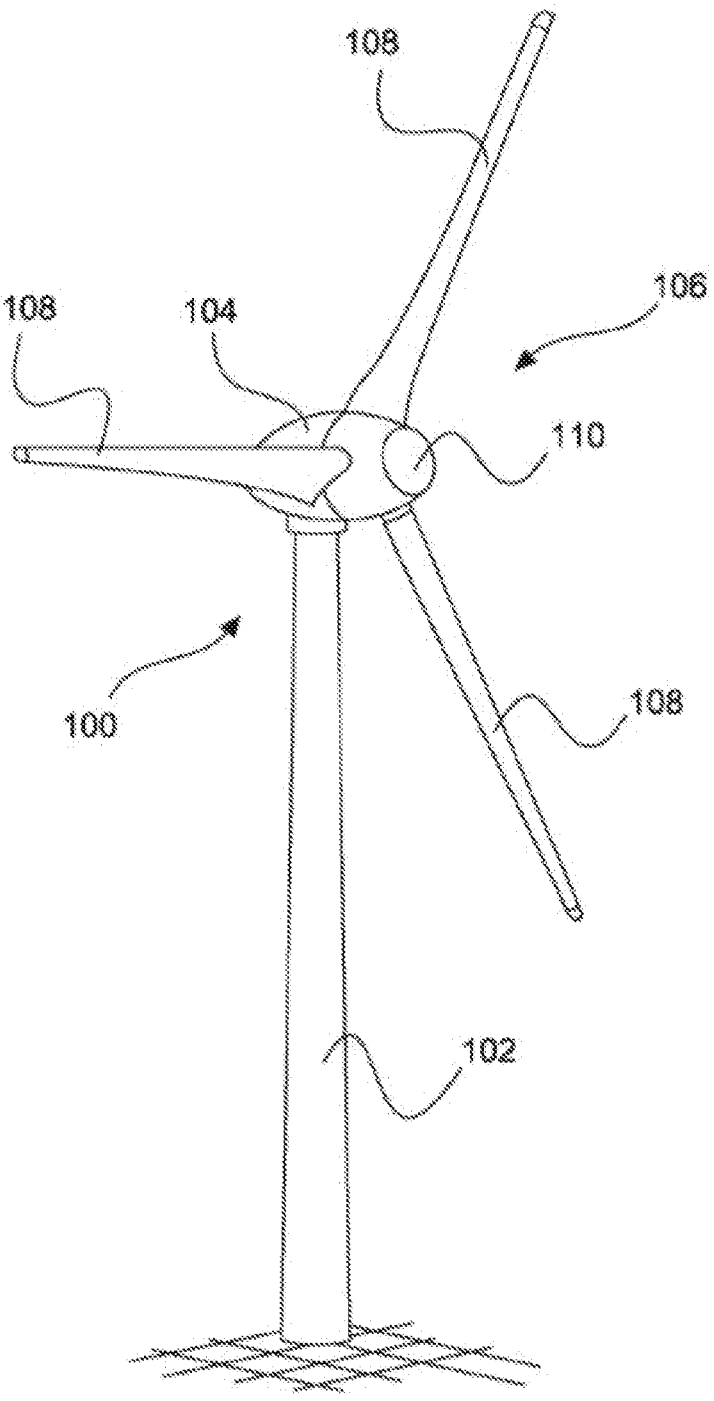

Fig. 1

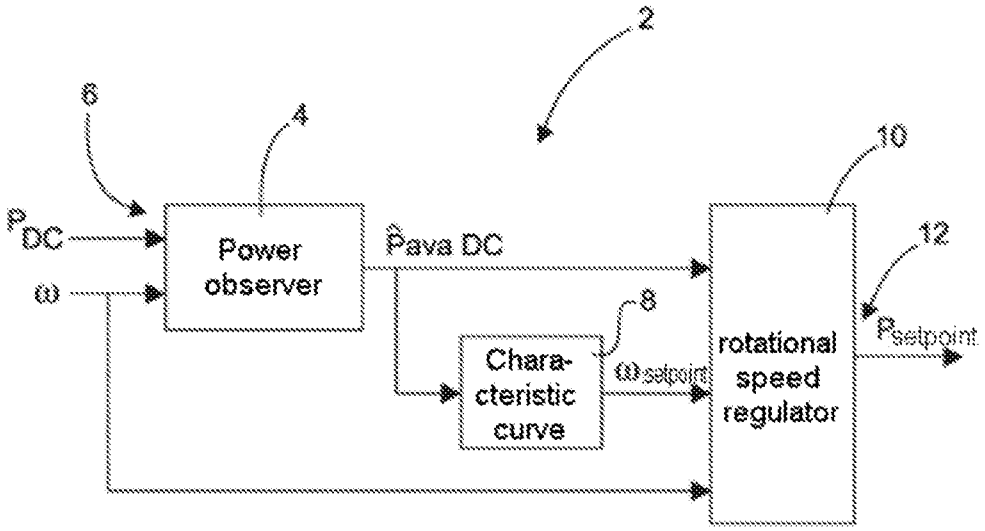
2
6
4
10
P_{DC}
ω
Power observer
$\hat{P}_{ava\ DC}$
12
8
Chara-cteristic curve
$\omega_{setpoint}$
rotational speed regulator
$P_{setpoint}$

Fig. 2

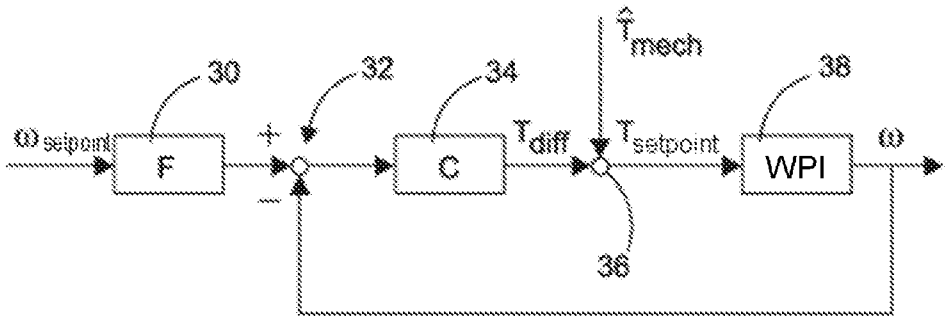
$\hat{T}_{mech}$
30
32
34
38
$\omega_{setpoint}$
F
+
−
C
T_{diff}
$T_{setpoint}$
WPI
ω
36

Fig. 3

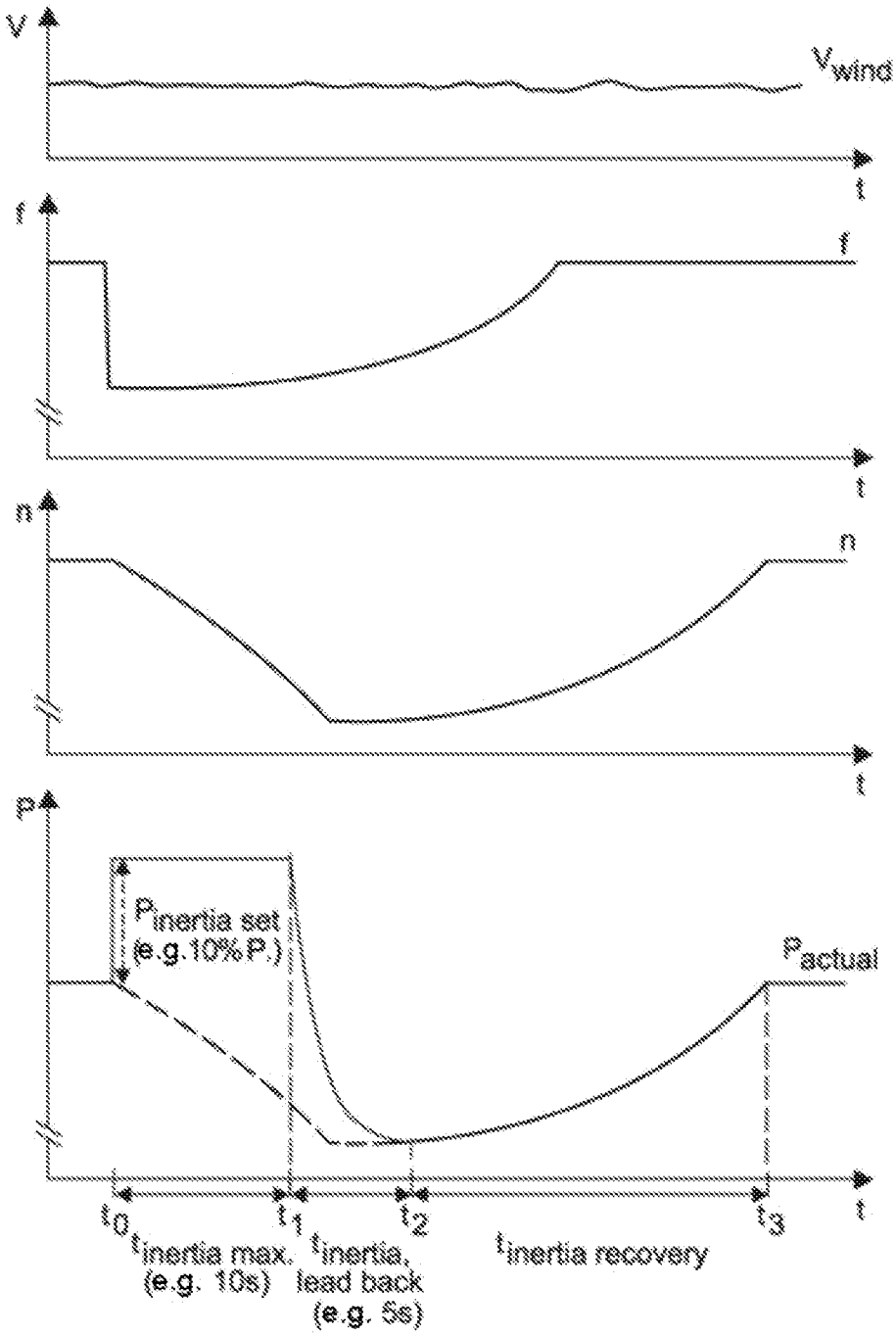
V
V_{wind}
t
f
f
t
n
n
t
P
$P_{inertia\ set}$
(e.g.10%P)
P_{actual}
t
t_0
t_1
t_2
t_3
$t_{inertia\ max.}$
(e.g. 10s)
$t_{inertia,}$
lead back
(e.g. 5s)
$t_{inertia\ recovery}$

Fig. 4

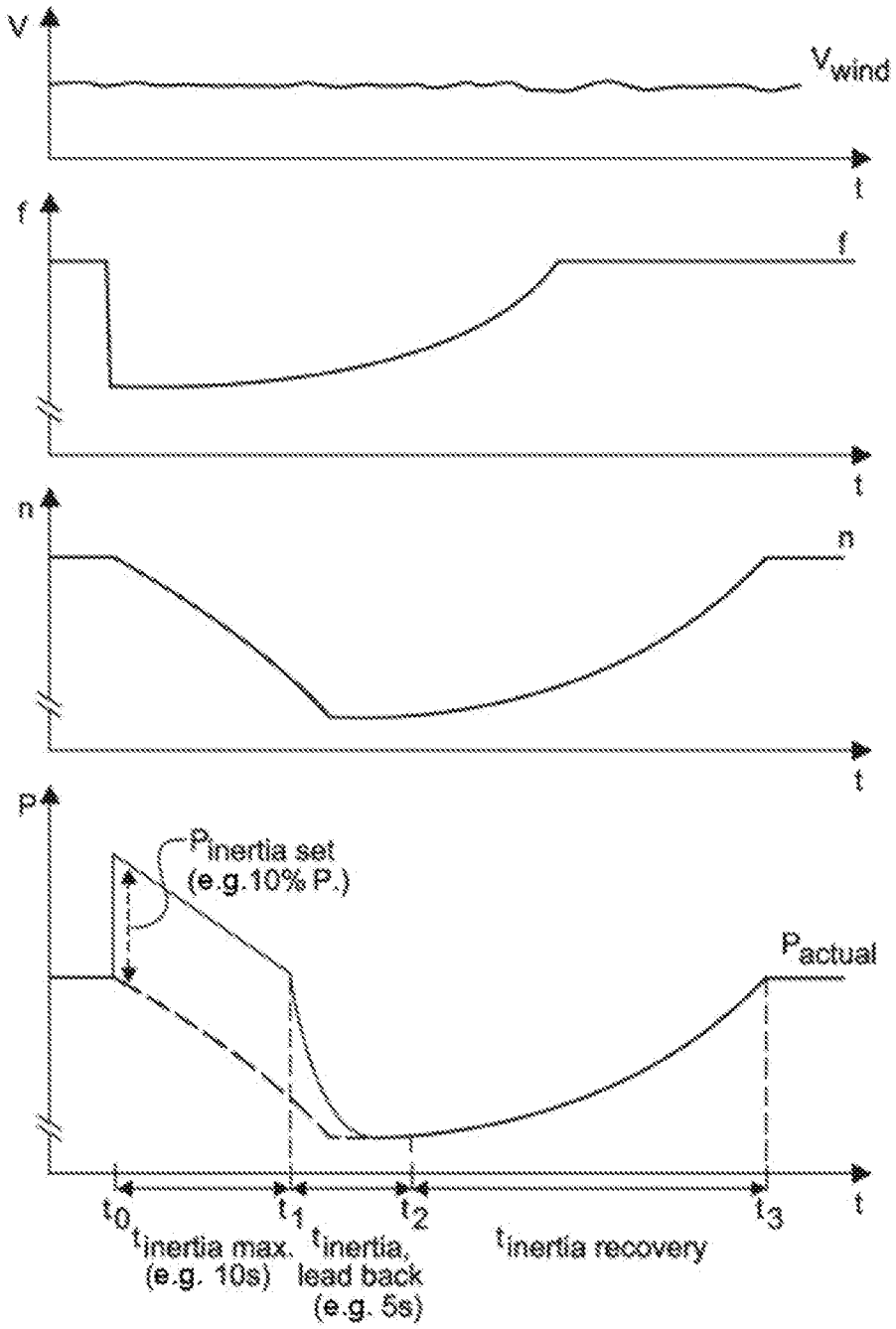
V
V_{wind}
t
f
f
t
n
n
t
P
$P_{inertia\ set}$
(e.g.10% P_r)
P_{actual}
t_0
t_1
t_2
t_3
t
$t_{inertia\ max.}$
(e.g. 10s)
$t_{inertia,}$
lead back
(e.g. 5s)
$t_{inertia\ recovery}$

Fig. 5

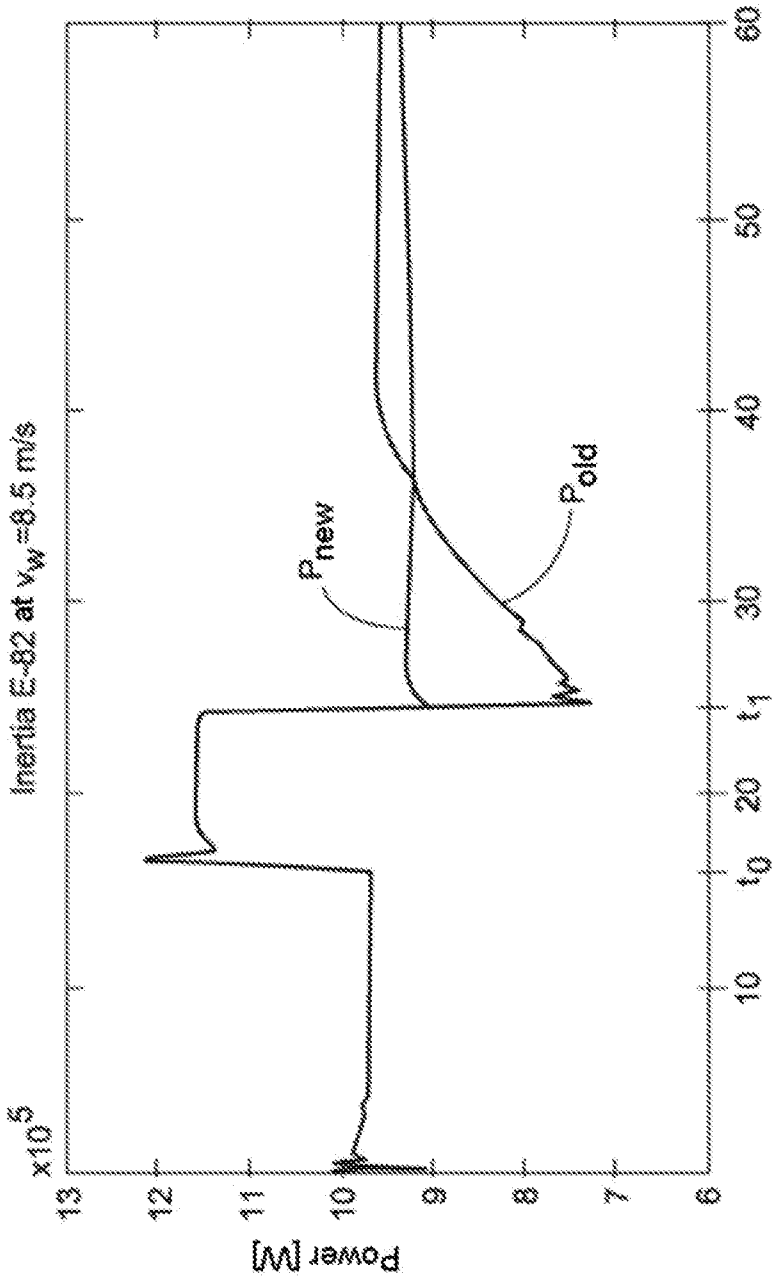
Inertia E-82 at v_w=8.5 m/s
x10^5
13
12
11
10
9
8
7
6
Power [W]
60
50
40
30
20
10
t_1
t_0
Time [s]
P_{new}
P_{old}

Fig. 6