PCT WORLD INTELLECTUAL PROPERTY ORGANIZATION
International Bureau

INTERNATIONAL APPLICATION PUBLISHED UNDER THE PATENT COOPERATION TREATY (PCT)

(51) International Patent Classification 5 : C09K 5/04	A1	(11) International Publication Number: WO 92/16596
		(43) International Publication Date: 1 October 1992 (01.10.92)

(21) International Application Number: PCT/GB91/00439

(22) International Filing Date: 22 March 1991 (22.03.91)

(71) Applicant: STAR REFRIGERATION LIMITED [GB/GB]; Thornliebank Industrial Estate, Glasgow G46 8JW (GB).

(74) Agents: MCCALLUM, William, Potter et al.; Cruikshank & Fairweather, 19 Royal Exchange Square, Glasgow G1 3AE (GB).

(81) Designated States: BR, CA, SU.

Published
With international search report.

(54) Title: THREE-COMPONENT REFRIGERANT

(57) Abstract

A three component refrigerant composition for use in vapour compression refrigerators and avoiding the use of ozone-depleting chlorofluorocarbons comprises a three component mixture of: (i) a major portion comprised of chlorodifluoromethane (R22) or pentafluoroethane (R125); (ii) R125 or octafluoropropane (R218); and (iii) propane, in non-flammable proportions.

FOR THE PURPOSES OF INFORMATION ONLY

Codes used to identify States party to the PCT on the front pages of pamphlets publishing international applications under the PCT.

AT	Austria	**FI**	Finland	**ML**	Mali
AU	Australia	**FR**	France	**MN**	Mongolia
BB	Barbados	**GA**	Gabon	**MR**	Mauritania
BE	Belgium	**GB**	United Kingdom	**MW**	Malawi
BF	Burkina Faso	**GN**	Guinea	**NL**	Netherlands
BG	Bulgaria	**GR**	Greece	**NO**	Norway
BJ	Benin	**HU**	Hungary	**PL**	Poland
BR	Brazil	**IE**	Ireland	**RO**	Romania
CA	Canada	**IT**	Italy	**RU**	Russian Federation
CF	Central African Republic	**JP**	Japan	**SD**	Sudan
CG	Congo	**KP**	Democratic People's Republic of Korea	**SE**	Sweden
CH	Switzerland			**SN**	Senegal
CI	Côte d'Ivoire	**KR**	Republic of Korea	**SU**	Soviet Union
CM	Cameroon	**LI**	Liechtenstein	**TD**	Chad
CS	Czechoslovakia	**LK**	Sri Lanka	**TG**	Togo
DE	Germany	**LU**	Luxembourg	**US**	United States of America
DK	Denmark	**MC**	Monaco		
ES	Spain	**MG**	Madagascar		

THREE-COMPONENT REFRIGERANT

The present invention relates to a three-component refrigerant mixture for use in refrigeration apparatus which has improved environmental acceptability.

In refrigeration apparatus, two commonly used refrigerants have been the chlorofluorocarbon gases (CFC) referred to as refrigerant 12 (CCl_2F_2) and refrigerant 502 (an azeotrope of R115 ($CClF_2CF_3$) and R22 ($CHClF_2$)). However, refrigerants 12 and 502 have been implicated in causing environmental damage. Specifically, these gases, which are very inert, are released from refrigeration systems, aerosols, foam packaging etc. at ground level and diffuse into the upper atmosphere. Because of their inertness, the gases are able to survive without decomposition until they reach the stratosphere where they are broken down by ultra-violet radiation, releasing chlorine atoms which catalyse breakdown of the stratospheric ozone layer. There has recently been considerable concern about reductions in stratospheric ozone levels and this has led to proposed bans on certain CFC'S such as refrigerants 11 and 12. Other refrigerants such as refrigerant 22 ($CHClF_2$) and refrigerant 125 (CHF_2CF_3) are environmentally less objectionable as they tend to be naturally degraded at lower levels of the atmosphere before reaching the ozone layer.

Considerable efforts are being made to replace

refrigerants 12 and 502 with more environmentally acceptable alternatives. However, such new chemicals are generally unavailable at present and are expected to be considerably more expensive than presently used refrigerants.

Whilst refrigerant 22 is environmentally more acceptable, it has a higher index of compression than, for example, refrigerant 12. This means that compressor discharge temperatures become excessive at pressure ratios which would not cause excessive discharge temperatures if refrigerant 12 were being used.

Refrigerant R125 (CHF_2CF_3) has no ozone depleting potential. However, it is only now becoming commercially available and is very expensive to use alone.

Propane (R290) has certain useful thermodynamic properties and its use as a refrigerant has been proposed. US Patent Specification 2511993 discloses the use of an azeotropic mixture of propane (32% by weight) and R22 as a refrigerant. However, propane by itself or in azeotropic mixtures has the significant disadvantage of forming inflammable mixtures with air, which poses a safety hazard in the event of leakage of refrigerant.

Japanese Patent Specification 63-105088 discloses mixtures of propane with R22 and R143A (CF_3CH_3) which would be flammable.

The assessment of flammability characteristics is not necessarily predictable, depending on a variety of factors

including the nature of the CFC and its effect on the combustion process.

It is an object of the present invention to provide non-flammable mixtures of propane with CFC refrigerants in suitable proportions such as to impart the required overall refrigerant characteristics for use in a vapour compression refrigerators (such as pressure/temperature relationship, specific heat ratio, latent heat of vapourisation, compression ratio, acoustic velocity, vapour density, heat transfer properties, and water and oil solubility properties) whilst at the same time being of improved environmental acceptability, and at reasonable cost.

A first aspect of the invention provides a non-flammable refrigerant composition for use in a refrigerant apparatus which comprises a mixture of three different components:

(i) a major portion comprised of a refrigerant selected from chlorodifluoromethane (R22) and pentafluoroethane (R125);

(ii) a refrigerant selected from pentafluoroethane (R125) and octafluoropropane (R218); and

(iii) propane

in non-flammable proportions.

A second aspect provides a method of refrigeration which employs the composition as refrigerant medium.

A third aspect provides a refrigeration apparatus

which employs the composition as refrigerant medium.

The gases are used in proportions which constitute a non-flammable mixture. Such mixture may or may not constitute an azeotropic mixture (i.e. a constant boiling mixture).

The effect of the propane is to reduce the index of compression of the composition. The presence of relatively large proportions of the CFC components R22, R125 and R218 renders the composition non-flammable. In this way, the disadvantages of the various CFC'S and the flammability of propane are avoided. In particular, the composition provides a non-toxic, non-flammable refrigerant with low index of compression, good miscibility with lubricating oil and good motor cooling characteristics.

The composition is non-flammable so that in the event of a leak of refrigerant medium into the atmosphere, no explosive or flammable mixture is produced. In particular, a non-flammable composition is one which contains the gases in such a ratio that when the composition is mixed with air in practical proportions (e.g. in the event of a leak) no flammable mixture results.

Overall, the proportions of the components are preferably in the following proportions by weight:

(i) 65 - 90 wt%

(ii) 5 - 25 wt%

(iii) 3 - 15 wt%

such that the composition is non-flammable.

Compositions comprising R22, R125 and propane are preferably in the following proportions:

(i) 65 - 75 wt% of R22;

(ii) 15 - 25 wt% of R125; and

(iii) 5 - 15 wt% of propane.

Compositions comprising R22, R218 and propane are preferably in the following proportions:

(i) 83 - 93 wt% of R22;

(ii) 3 - 9 wt% of R218; and

(iii) 3 - 9 wt% of propane.

Compositions comprising R125, R218 and propane are generally in the following proportions:

(i) 80 -90 wt% of R125;

(ii) 5 - 15 wt% of R218; and

(iii) 3 - 10 wt% of propane.

The refrigerant compositions of the present invention can be used to replace presently used refrigerants with little modification to the apparatus or operating parameters, and provide acceptable coefficients of performance.

Embodiments of the present invention will now be described in the following Examples. Figures 1 to 7 show refrigerant performance data for Example 1, whilst Figure 8 shows a test apparatus used in the flammability testing described in Example 2.

Example 1 (Refrigerant Performance)

A refrigerant test rig was constructed with the object of testing various refrigerants and refrigerant mixtures under practical operating conditions. The test rig consisted of a continuous ice maker fed with refrigerant by an HP float type metering device. The refrigerant was compressed by a fully sealed compressor and condensed in a water cooled condenser. Provision was made for measuring the rate of ice production, the weight of condensing water flow, the compressor suction and discharge pressures and refrigerant temperatures and water temperatures at various points. Provision was also made for measuring the power consumption of the compressor and the compressor motor winding temperatures. The results are shown in Figures 1 to 7 wherein:

Figure 1 shows the effect of varying the proportions of refrigerant 22, refrigerant 290 and refrigerant 218 in the three possible binary mixtures of these refrigerants.

Figure 2 shows a graphical representation of the surface produced when the three sectors of Figure 1 are combined to form a triangular prism.

Figure 3 is a plan view of the top of the prism showing ice production contours. Similar prisms can be constructed for compressor discharge temperatures and for motor winding temperatures.

Figure 4 shows the effect of various mixtures on compressor discharge temperature from which the beneficial effects of additions of R218 and R290 to a major component of R22 can be seen.

Figure 5 is a plan view of the top surface of the prism showing discharge temperature contours for ternary refrigerant mixtures of R22, R290 and R218.

Figure 6 shows a three dimensional view of the prism representing the effect of different refrigerant proportions in the refrigerant mixture used as an example on motor winding temperature. From this Figure it can be seen that small additions of R218 and R290 have a major effect on motor winding temperatures under the conditions of the test, and Figure 7 is a plan view of the top surface of the prism showing winding temperature contours.

Example 2 (Flammability Measurement)

It is an object of the present invention to mix the three components of the new refrigerant in proportions which are non-flammable. An apparatus was constructed to test the flammability of various refrigerant mixtures. The apparatus consisted of a metal box 1 (0.5 m^3) with three refrigerant connections attached to three refrigerant cylinders 3 located on electronic scales 2 weighing to

0.001 Kg, as indicated in Figure 8. The metal box had rigid perspex windows on two sides and an aperture on the third side which could be covered with thin transparent plastics film 6. A hole was cut in the top of the box so that an inflatable plastic bag 7 could be sealed in place. The box contained a small fan 4 to ensure adequate mixing and a pair of electrodes 5 to provide a spark with which to ignite the mixture if possible. In order to make sure that there was enough energy in the spark to ignite the mixture if at all possible, an 11,000 volt transformer was used to provide the spark which was about 12mm long. During flammability tests the refrigerants were added to the air in the box in predetermined proportions. At the start of the test the bag on top of the box was deflated. As refrigerant was added to the box the bag progressively inflated. The test was terminated before significant internal pressures, which might have caused significant leakage from the box, were developed. At each stage of an individual test the R22 was added first, the R218 next and the flammable propane last. After an interval of about 30 seconds to allow mixing within the apparatus, the spark was switched on for a few seconds. If ignition did not take place the concentration of the refrigerant mixture in the predetermined proportions was increased by adding more refrigerant to the air in the box till the bag was approaching full inflation. The results of these

flammability tests were consistent and reproducible. Tests were also carried out on mixtures of pure propane in air. It was found that pure propane could be caused to ignite at proportions slightly less those given in the literature for the lower limit of flammability. It was considered that this was probably because the very high energy of the spark and because of the large dimensions of the test chamber which minimised cooling effects from the walls. Most reported flammability testing appears to have been done in relatively small vessels with low energy sparks. It was found for example that a mixture of 86% R22, 7% R218 and 7% R290 could be induced to ignite at high concentrations in air. A mixture of 88% R22, 6% R218 and 6% R290 could not be induced to ignite under any conditions up to concentrations of about 5 times the amount of R22 permitted as the result of an accident in a humanly occupied space.

The results of the tests in the refrigeration rig and the flammability test rig indicate that non-flammable refrigerant mixtures containing R218 and R290 can produce significant benefits in reduction of motor winding temperature, reduction in compressor discharge temperature and increase of refrigerating capacity.

CLAIMS

1. A non-flammable refrigerant composition for use in a refrigerant apparatus which comprises a mixture of three different components:

(i) a major portion comprises of a refrigerant selected from chlorodifluoromethane (R22) and pentafluoroethane (R125);

(ii) a refrigerant selected from pentafluoroethane (R125) and octafluoropropane (R218); and

(iii) propane;

in non-flammable proportions.

2. A composition according to claim 1 wherein the three components are present in the following proportions by weight:

(i) 65 - 90 wt%;

(ii) 5 - 25 wt%; and

(iii) 3- 15 wt%

such that the composition is non-flammable.

3. A composition according to claim 1 which comprises a non-flammable mixture of chlorodifluoromethane (R22), pentafluoroethane (R125) and propane.

4. A composition according to claim 3 which comprises:

(i) 65 - 75 wt% of R22;

(ii) 15 - 25 wt% of R125; and

(iii) 5 - 15 wt% of propane.

5. A composition according to claim 1 which comprises a non-flammable mixture of chlorodifluoromethane (R22),

octafluoropropane (R218) and propane.

6. A composition according to claim 5 which comprises:

(i) 83 - 93 wt% of R22;

(ii) 3 - 9 wt% of R218; and

(iii) 3 - 9 wt% of propane.

7. A composition according to claim 1 which comprises a non-flammable mixture of pentachloroethane (R125)1, octafluoropropane (R218), and propane.

8. A composition according to claim 7 which comprises:

(i) 80 - 90 wt% of R125;

(ii) 5 - 15 wt% of R218; and

(iii) 3 - 10 wt% of propane.

9. A vapour compression refrigeration apparatus which employs as refrigerant medium a composition according to any preceding claim.

10. A method of performing vapour compression refrigeration wherein the refrigerant composition of any of claims 1 to 8 is employed.

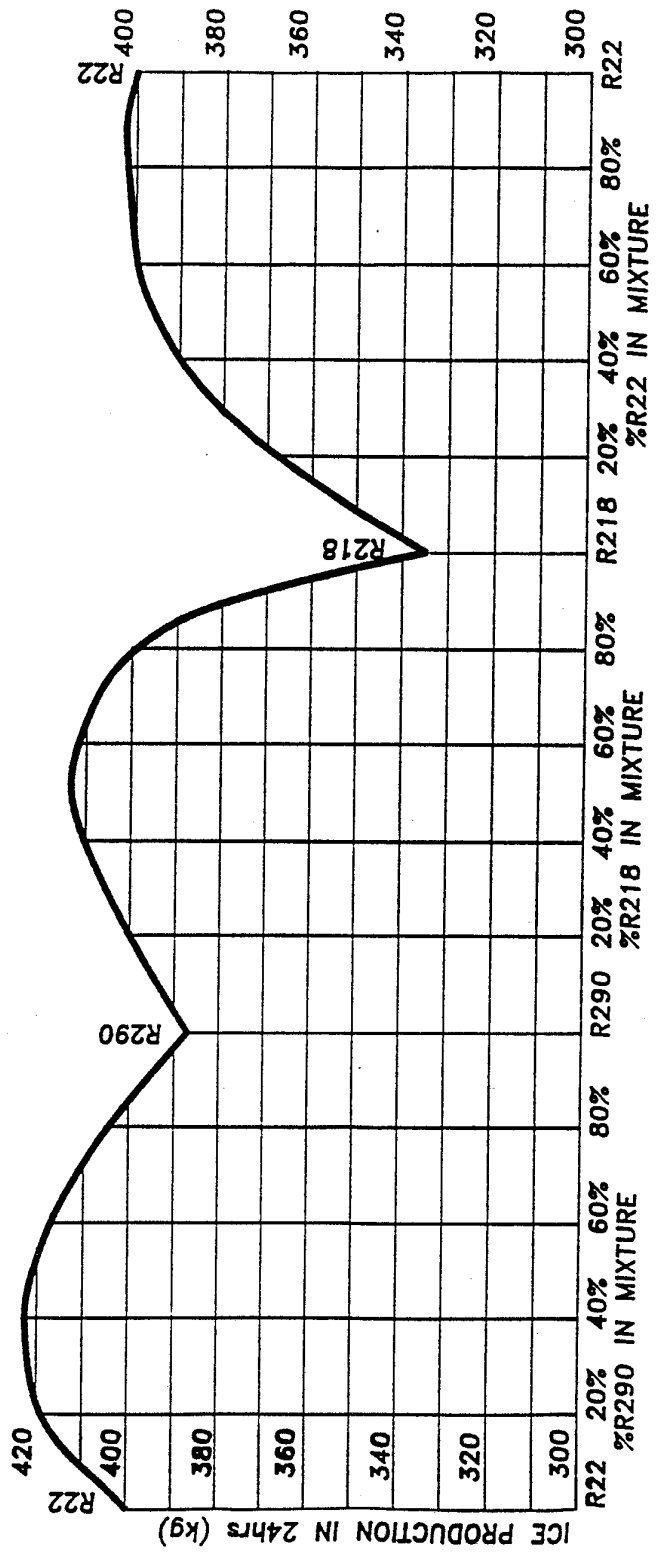
ICE PRODUCTION IN 24hrs (kg)
420
400
380
360
340
320
300
R22
R290
R218
R22
R22 20% 40% 60% 80% R290 20% 40% 60% 80% R218 20% 40% 60% 80% R22
%R290 IN MIXTURE
%R218 IN MIXTURE
%R22 IN MIXTURE

FIG 1

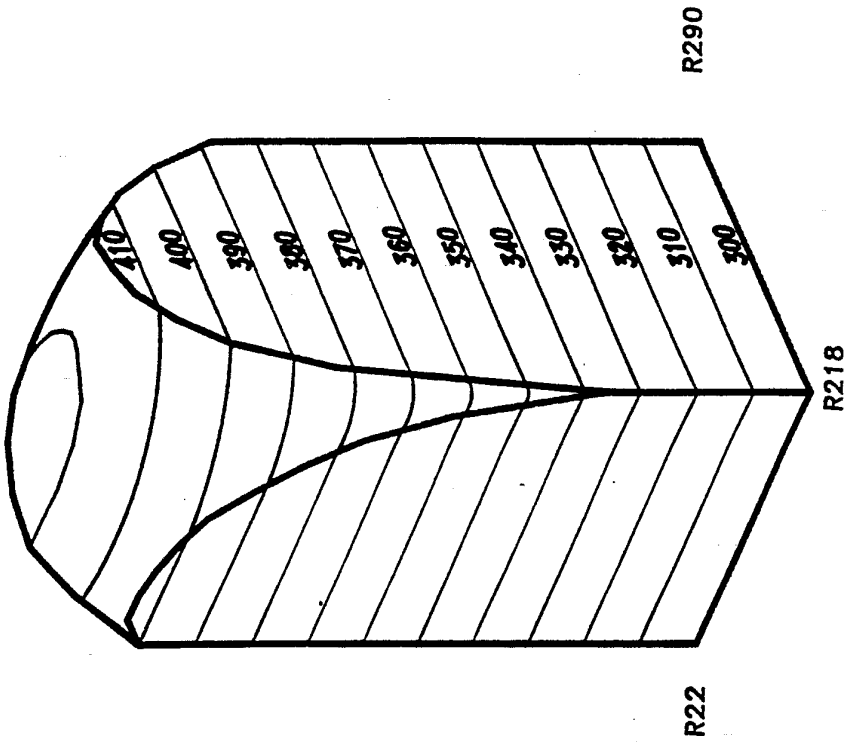
R290
410
400
390
380
370
360
350
340
330
320
310
300
R218
R22

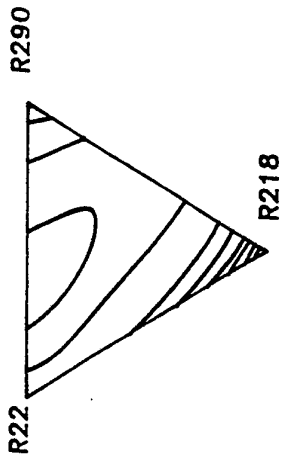
R290
R218
R22

FIG 2

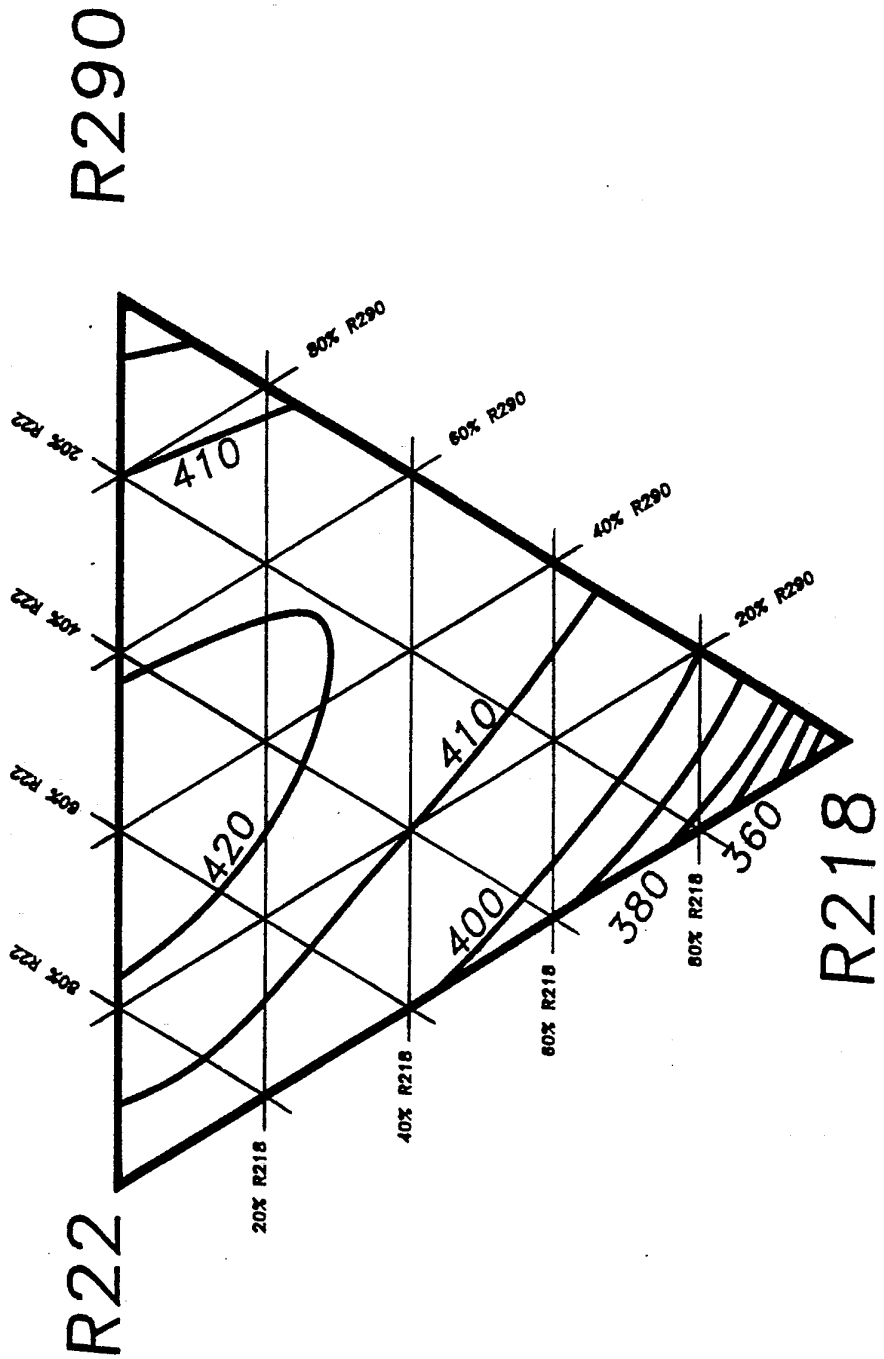
R290
R22
R218
80% R290
60% R290
40% R290
20% R290
20% R22
40% R22
60% R22
80% R22
20% R218
40% R218
60% R218
80% R218
410
410
420
400
380
360

FIG 3

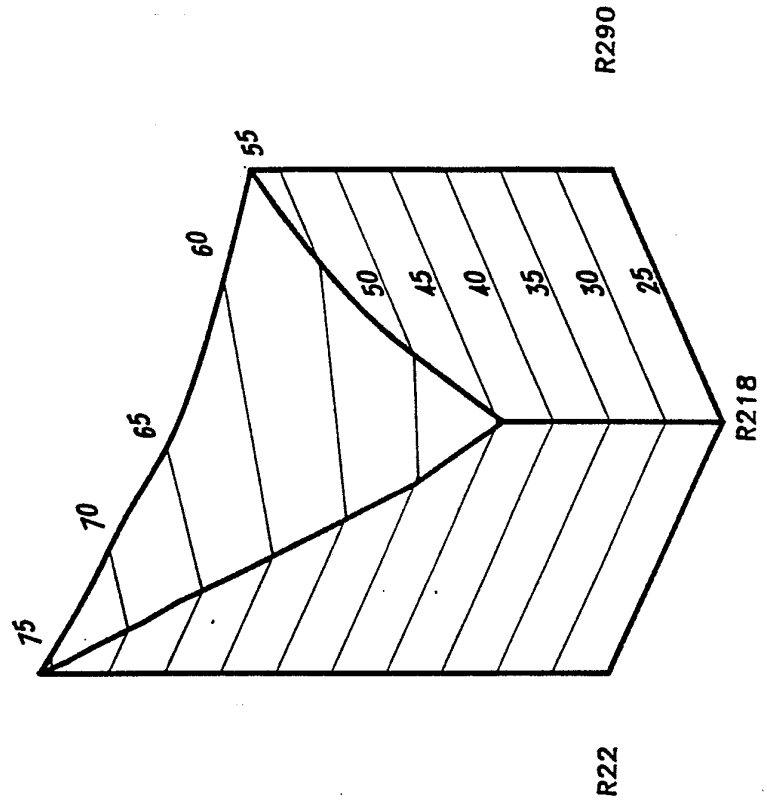

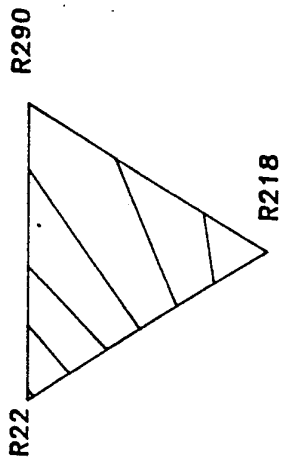

FIG 4

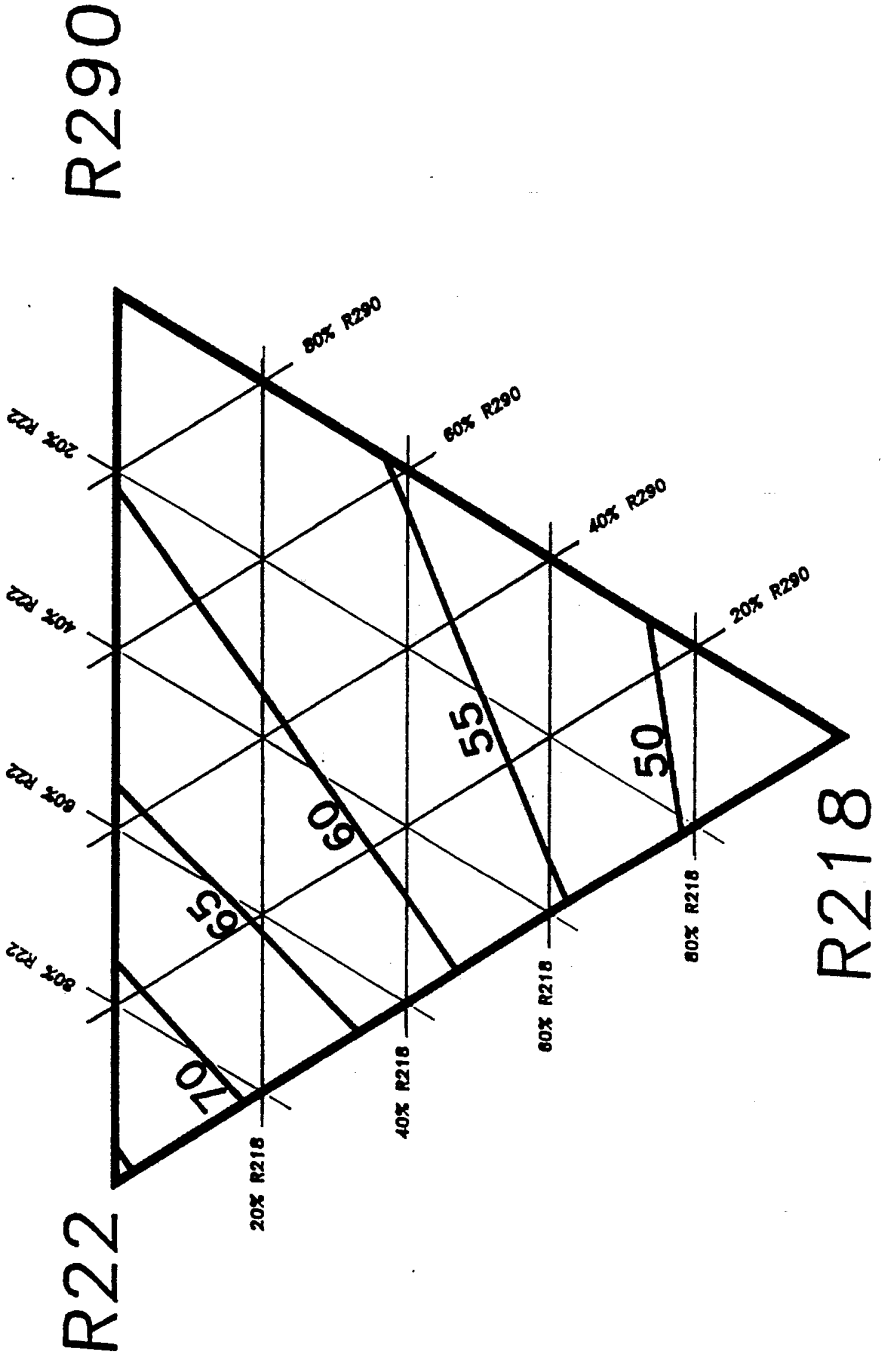
R290
R218
R22
80% R290
60% R290
40% R290
20% R290
20% R22
40% R22
60% R22
80% R22
80% R218
60% R218
40% R218
20% R218
70
65
60
55
50

FIG 5

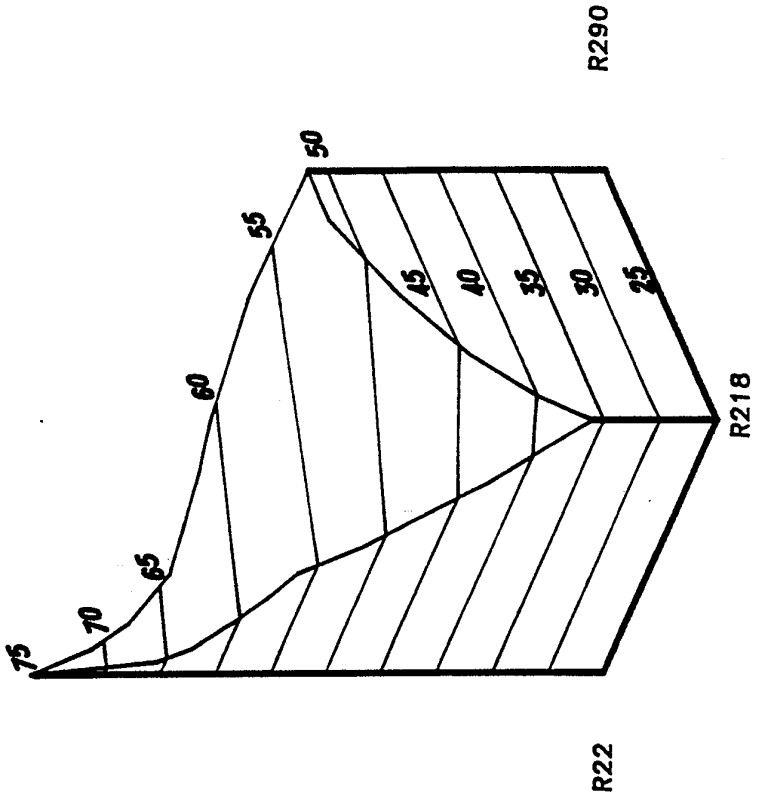

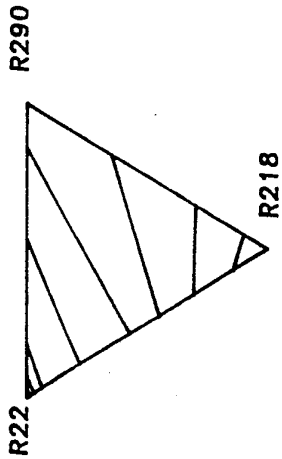

FIG 6

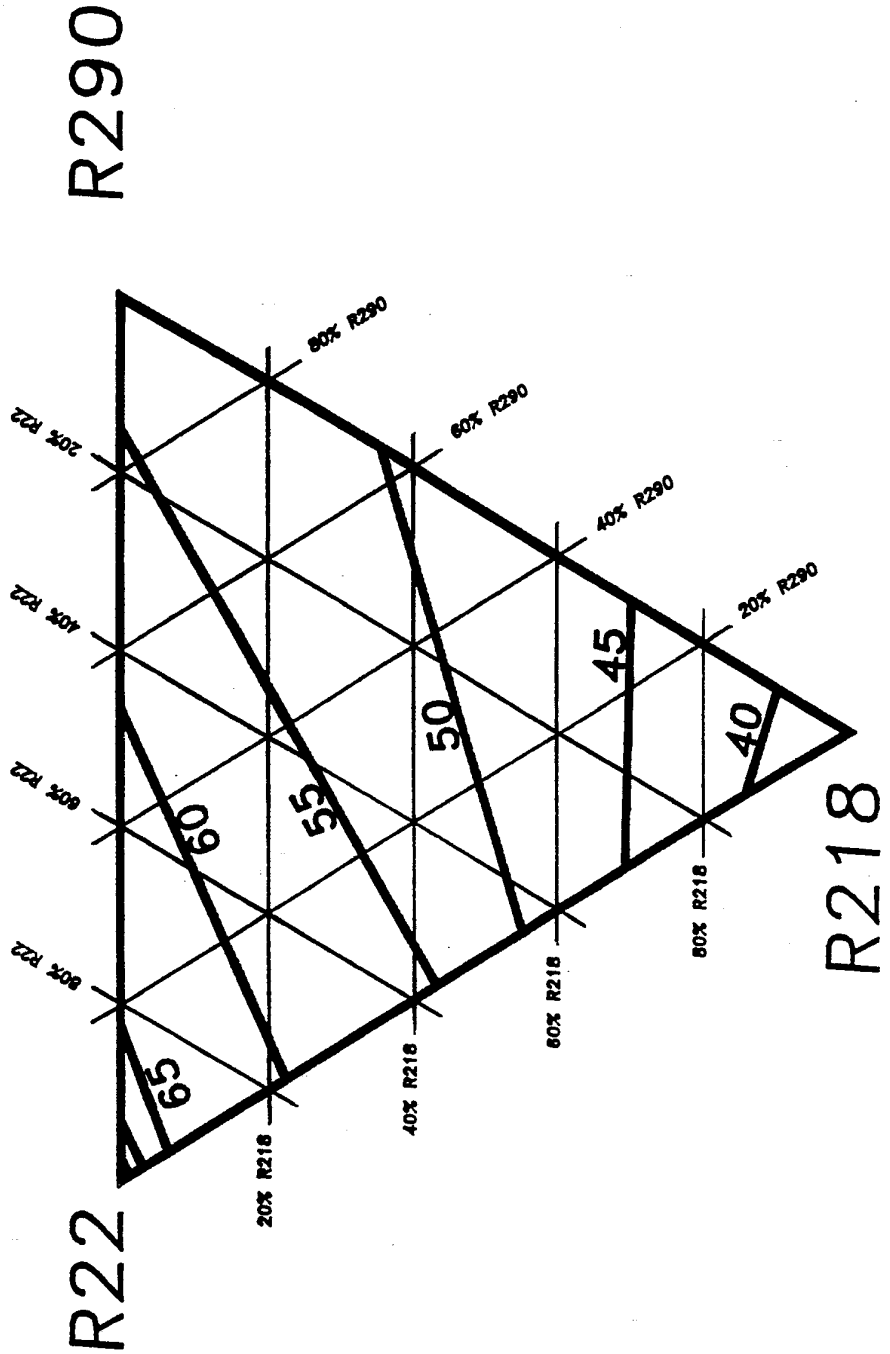
R290
R22
R218
80% R290
60% R290
40% R290
20% R290
20% R22
40% R22
60% R22
80% R22
20% R218
40% R218
60% R218
80% R218
65
60
55
50
45
40

FIG 7

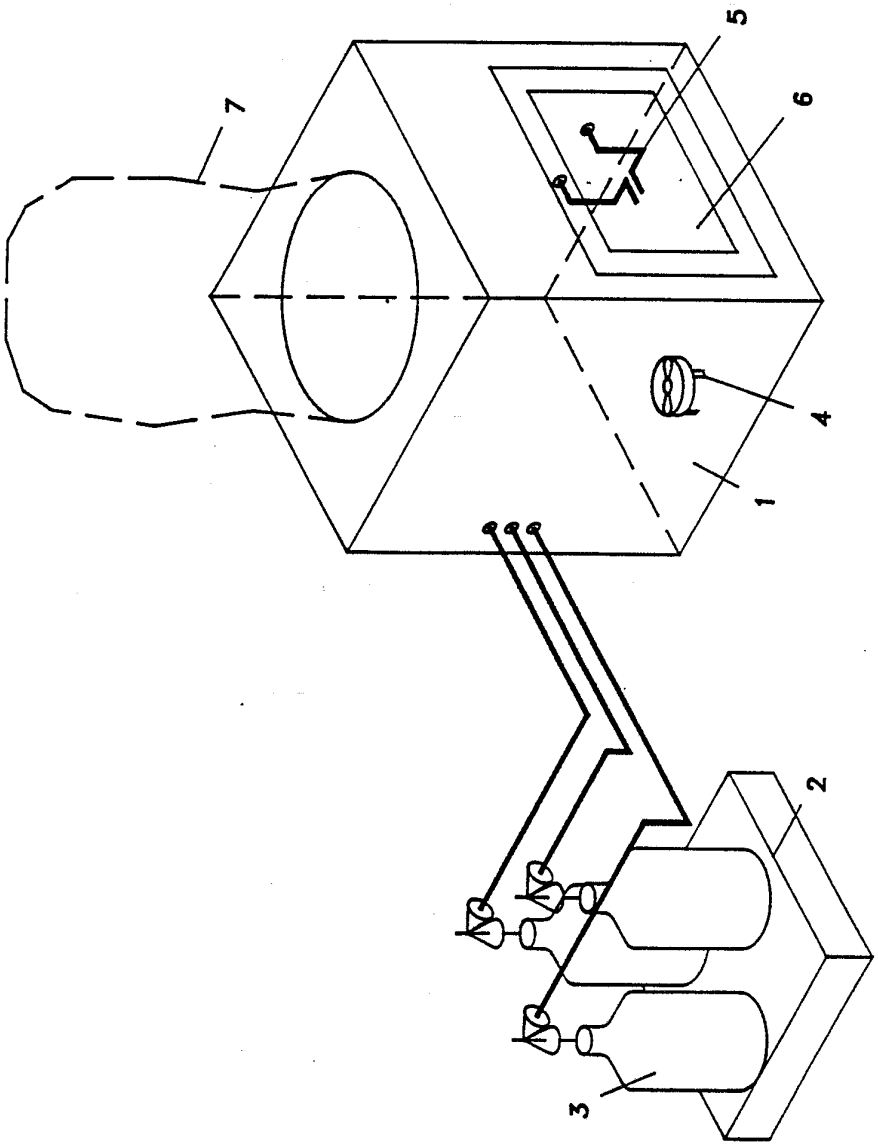

FIGURE 8

INTERNATIONAL SEARCH REPORT

International Application No PCT/GB 91/00439

I. CLASSIFICATION OF SUBJECT MATTER (if several classification symbols apply, indicate all)[6]

According to International Patent Classification (IPC) or to both National Classification and IPC

Int.Cl. 5 C09K5/04

II. FIELDS SEARCHED

Minimum Documentation Searched[7]

Classification System	Classification Symbols
Int.Cl. 5	C09K

Documentation Searched other than Minimum Documentation to the Extent that such Documents are Included in the Fields Searched[8]

III. DOCUMENTS CONSIDERED TO BE RELEVANT[9]

Category °	Citation of Document,[11] with indication, where appropriate, of the relevant passages[12]	Relevant to Claim No.[13]
E	EP,A,0 419 042 (STAR REFRIGERATION LTD.) 27 March 1991 see the whole document	1-10
A	GB,A,2 228 739 (STAR REFRIGERATION LTD.) 5 September 1990 see page 3, paragraph 2 see page 3, paragraph 8 - page 4, paragraph 2 see claims 1,2	1-6,9,10
A	DATABASE DERWENT WORLD PATENT INDEX Derwent publications ltd., LONDON, GB accession no. 80-59564c/34 for heat exchange... & JP-A-55090581 [DAIKIN KOGYO KK], 28 Dec 1978 see the whole document	1-6,9,10

-/--

° Special categories of cited documents :[10]

"A" document defining the general state of the art which is not considered to be of particular relevance

"E" earlier document but published on or after the international filing date

"L" document which may throw doubts on priority claim(s) or which is cited to establish the publication date of another citation or other special reason (as specified)

"O" document referring to an oral disclosure, use, exhibition or other means

"P" document published prior to the international filing date but later than the priority date claimed

"T" later document published after the international filing date or priority date and not in conflict with the application but cited to understand the principle or theory underlying the invention

"X" document of particular relevance; the claimed invention cannot be considered novel or cannot be considered to involve an inventive step

"Y" document of particular relevance; the claimed invention cannot be considered to involve an inventive step when the document is combined with one or more other such documents, such combination being obvious to a person skilled in the art.

"&" document member of the same patent family

IV. CERTIFICATION

Date of the Actual Completion of the International Search	Date of Mailing of this International Search Report
04 NOVEMBER 1991	14. 11. 91
International Searching Authority	**Signature of Authorized Officer**
EUROPEAN PATENT OFFICE	VAN DER POEL W.

Form PCT/ISA/210 (second sheet) (January 1985)

III. DOCUMENTS CONSIDERED TO BE RELEVANT (CONTINUED FROM THE SECOND SHEET)

Category *	Citation of Document, with indication, where appropriate, of the relevant passages	Relevant to Claim No.
A	US,A,2 511 993 (W.H.REED) 20 June 1950 cited in the application see the whole document ---	1-6

ANNEX TO THE INTERNATIONAL SEARCH REPORT ON INTERNATIONAL PATENT APPLICATION NO. GB 9100439 SA 46021

This annex lists the patent family members relating to the patent documents cited in the above-mentioned international search report. The members are as contained in the European Patent Office EDP file on
The European Patent Office is in no way liable for these particulars which are merely given for the purpose of information. 04/11/91

Patent document cited in search report	Publication date	Patent family member(s)	Publication date
EP-A-0419042	27-03-91	JP-A- 3152182	28-06-91
GB-A-2228739	05-09-90	None	
US-A-2511993		None	