June 6, 1950 G. S. PERKINS 2,510,317

PUMP CONSTRUCTION

Filed Dec. 28, 1948 2 Sheets-Sheet 1

Fig. 1.

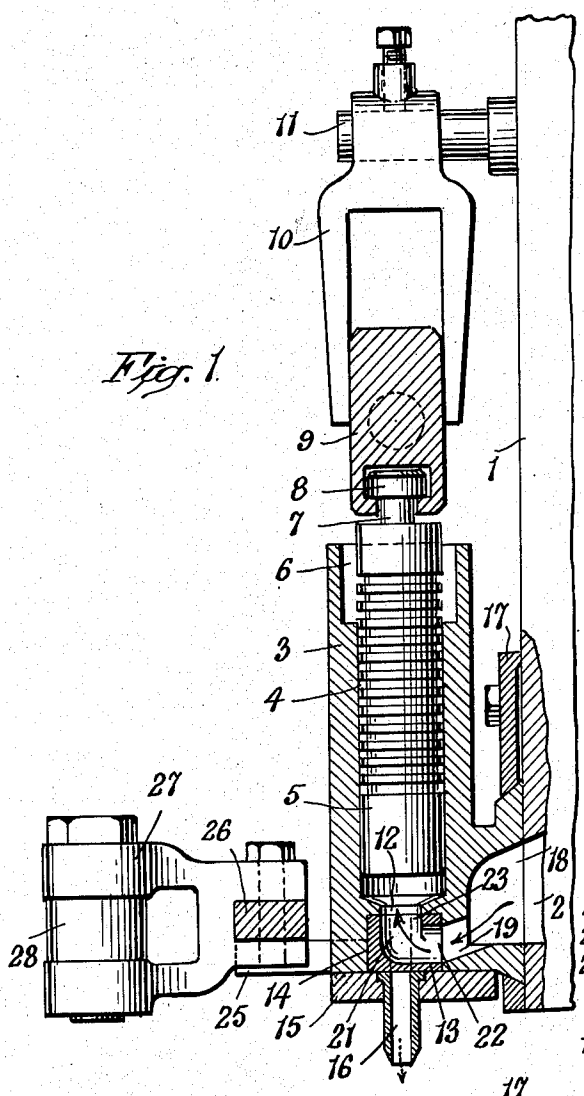

Fig. 2.

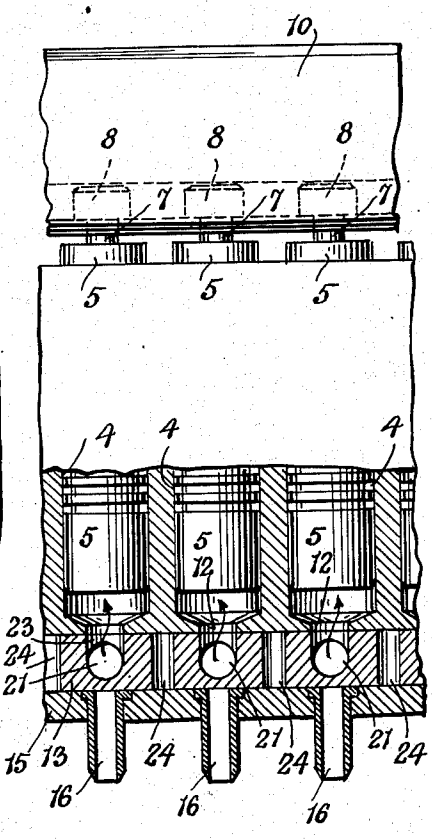

Fig. 4.

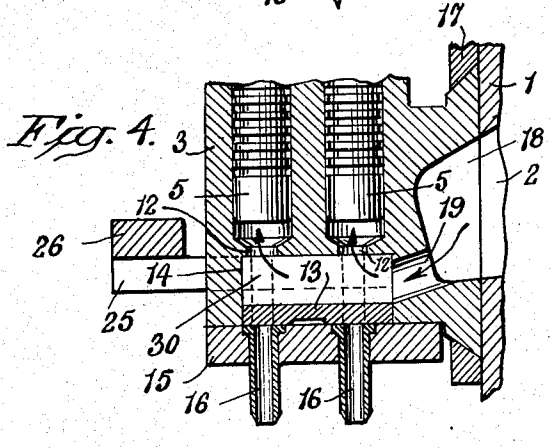

INVENTOR.
George S. Perkins
BY
Harry Radzinsky
ATTORNEY

Patented June 6, 1950 2,510,317

UNITED STATES PATENT OFFICE

2,510,317

PUMP CONSTRUCTION

George S. Perkins, Kew Gardens, N. Y., assignor to National Equipment Corporation, New York, N. Y., a corporation of New York

Application December 28, 1948, Serial No. 67,637

6 Claims. (Cl. 222—255)

1

This invention relates to pump construction, and more particularly to pumps especially adapted for use in confectionery-making and similar machines. The pumps used in machines of this character are usually employed for the purpose of delivering the candy material or other viscous substances from a hopper to moulds, or for depositing small and regulated quantities of the candy material on surfaces to form candies of certain shapes and sizes.

The pumps generally employed for this work are required to operate with various types of candy materials, some of which is relatively thick and viscous while others are thinner or of less consistency and of more liquid nature. Hence such pumps must be of a nature and construction which will enable them to operate accurately and unfailingly with these various candy materials.

One of the objects of the present invention is to provide a pump construction in which the handling of various types of candy materials is facilitated; by which the delivery of the various materials, regardless of their fluidity and viscosity, in accurate amounts into the moulds or on surfaces, is certain and very effectively and rapidly done so that the resultant products are of uniform nature.

More particularly, the invention contemplates the provision of a pump in which a plurality of pistons suctionally draw into their cylinders predetermined amounts of the material to be deposited and then, upon the descent of the pistons, deposit such material into moulds or on surfaces located at the outlets of the cylinders, and in an improved valve or cut-off means located between the hopper and cylinders and by means of which communication is established between the hopper and the cylinders at predetermined times and also a discharge of the contents from the cylinders is had at other times, the cut-off bar being provided with communication ports in constant communication with the hopper outlet regardless of whether such ports are in communication with the cylinders or are shut off therefrom.

In the accompanying drawings, wherein two illustrative embodiments of the invention are disclosed, Fig. 1 is a vertical sectional view through a pump constructed in accordance with the invention; Fig. 2 is a front elevation of a portion tion of the pump, with the lower parts thereof shown in section; Fig. 3 is a horizontal sectional view through the pump, with some of the parts thereof being broken away; Fig. 4 is a vertical sectional view of a modified structure; Fig. 5 is a

2

horizontal sectional view through the structure of Fig. 4, with parts broken away, and Fig. 6 is a vertical sectional view, showing the pistons in the act of forcing the material out through the outlet nipples.

A pump means of the character herein described is particularly adapted for use in confectionary machines, wherein the goods in fluid or nearly-fluid form is delivered from a hopper to the pump and is ejected thereby in predetermined or regulated quantities into moulds, or else is deposited upon a suitable surface below the outlet nozzles of the pump. In the drawings a portion of the hopper is shown at 1, the same being provided in its front wall near the bottom, with an outlet opening 2 of a slotlike form extending substantially from one end of the hopper to the other. The pump housing is shown at 3 and the same is bored to provide a plurality of adjacent cylinders 4 in each of which is mounted a reciprocating piston 5. The particular pistons shown are of the so-called "hydro-sealed" type, and are provided with a plurality of circumferential grooves into which a fluid, such as water contained in the recess indicated at 6, may enter, the water acting as a sealing means.

At the top, each piston is provided with a stem 6 terminating in a head 8 engaged by an operating member 9 which is raised and lowered by suitable mechanism, in a guide 10 mounted on the stud 11 extending from the front of the hopper 1. This results in the pistons being vertically reciprocated for a required extent. The lower end of each of the cylinders 4 terminates in an outlet opening 12 of less diameter than the diameter of the cylinder, and said outlet opening is adapted at predetermined times, to register with ports extending through a cut-off bar or valve member 13 to be presently described.

Provided in the lower portion of the housing 3 below the cylinder outlets 12 is a groove 14 in which the cut-off bar 13 is slidable, said cut-off bar 13 being supported in place in said groove 14 by means of a closure plate 15 attached to the bottom of the pump housing at the bottom of the groove 14. The closure plate 15 is provided with a plurality of outlet pipes or nozzles 16 so positioned that one of said pipes or nozzles is located directly below each of the cylinder outlets 12.

The pump housing 3 is secured over the outlet slot 2 of the hopper by means of a clamping plate 17 and the said housing 3 is formed with an entrance opening or mouth 18 which registers with the outlet slot 2 of the hopper, as clearly seen in Fig. 1. Said mouth or entrance opening 18 in the

pump housing is in communication with the cut-off bar groove 14 by means of a lengthy inlet slot 19 which may be continuous for the greater part of the length of the housing 3 or it may be reinforced at spaced points by the webs 20 shown in Fig. 3.

The cut-off bar 13 is provided with a plurality of communication ports 21, each of said ports having one end, or that indicated at 22, in constant communication with the inlet slot 19. Said end is thus located in one side of the bar, while the other end 23 of the communication port 21 is at the top of the bar. Thus, each of the communication ports 21 is an angular passage having one end in constant communication with the inlet slot 19 and the other end being adapted, at predetermined times, to be located in registration with one of the outlet openings 12 of a cylinder 4.

Located on the cut-off bar 13 between the communication ports 21 are the discharge ports 24, the same being adapted, when in registry with the outlet openings 12 of the cylinders, to establish communication between said openings 12 and the discharge nipples or pipes 16.

From the foregoing, the operation of the pump will be readily understood. At its opposite ends, the slidable cut-off bar 13 is provided with the projecting lugs 25 connected by the bar 26 from which a clevis 27 extends, the same being attached to a link 28 connected to a suitable mechanism by means of which the cut-off bar 13 is slidably moved back and forth in the groove 14 with properly timed movements. During the ascent of the pistons 5, the cut-off bar is located in the position shown in Fig. 1, wherein it will be noted that the upper end 23 of each of the communication ports 21 is in registry with each of the cylinder outlet openings 12, the opposite ends 22 of the communication ports being in communication with the inlet slot 19 and hence in communication with the hopper outlet 2 so that a charge of the material from the hopper is being drawn up into each cylinder on this rising or suction movement of each piston.

When the pistons reach their highest position, the cut-off bar is then shifted to disalign the upper ends 23 of ports 21 from the cylinder outlets 12 and this movement brings the discharge ports 24 into registry with the cylinder outlets 12 and also into registry with the discharge nozzles 16. The pistons 5 are then moved downwardly and they force the charges of material out of the cylinders, down through the discharge ports 24 and out through the nozzles 16 and into moulds or onto a surface placed beneath these nozzles. It will be noted that while the pump is discharging in the manner above described, and while the upper end 23 of each of the communication ports 21 is cut off from communication with the cylinder outlets 12, the other end 22 of the communication ports 21 nevertheless remains in constant communication with the slot-like inlet 19 and hence in constant communication with the interior of the hopper. Thus, any agitating or feed means operative in the hopper will tend to maintain the material in these communication ports right up to the top outlets 23 thereof. Accordingly, when the cut-off bar shifts from discharge position to feed position and the pistons begin their ascent or suction stroke, the material to be sucked up into each cylinder is presented right at the bottom opening 12 in each cylinder. This has been found exceedingly useful and results in a uniform amount of goods being always drawn into and hence discharged from each cylinder.

In the embodiment of the invention shown in Figs. 4 to 6 inclusive, the cylinders 4 are arranged in two adjacent rows and the cut-off bar 13 is provided with slots 30 extending transversely across the bar, said slots constituting the communication ports serving to establish communication between the outlet of the hopper and each pair of cylinders. These slots 30 extend across the bar and are located between the ports 24, or in other words, in the same positions as those occupied by the communication ports 21 in the first embodiment of the invention. It will be noted that the transverse slots 30 have one end always in communication with the inlet 19 so that these slots are always filled with the material regardless of whether they are aligned or disaligned with the outlet openings 12 at the bottom of the cylinders 4.

Having described several embodiments of the invention, it is obvious that the same is not to be restricted thereto, but is broad enough to cover all structures within the scope of the annexed claims.

What I claim is:

1. In a pump construction, a housing provided with a plurality of cylinders, each cylinder having a bottom discharge opening, a piston mounted for reciprocating movement in each cylinder, an outlet nozzle located below each cylinder discharge opening, a slidable-cut off bar mounted in the housing between the cylinder discharge openings and the outlet nozzles, said cut-off bar being provided with a plurality of vertical ports adapted, when the cut-off bar is in a predetermined position, to establish communication between the cylinder discharge openings and the outlet nozzles, the cut-off bar being provided with inlet ports, a hopper having an outlet, the inlet ports in the cut-off bar being adapted by movement of the cut-off bar to an established position to establish communication between the cylinder discharge openings and the hopper outlet and while the vertical ports are disaligned with the cylinder discharge openings and the outlet nozzles, said inlet ports being in constant communication with the hopper outlet regardless of the position of the slidable cut-off bar.

2. In a pump construction, a hopper having an outlet, a housing connected to the outlet of the hopper, a plurality of cylinders carried by the housing, a piston in each cylinder, each cylinder having a bottom opening, a slidable cut-off bar mounted in the housing below said bottom openings of the cylinders and being provided with communication ports each having one end in constant communication with the hopper outlet and the other end adapted, when the cut-off bar is in an established position, to be placed in communication with the bottom opening of one of said cylinders, the cut-off bar having discharge ports extending through it, the housing having discharge outlets, the discharge ports being adapted to align with the bottom openings in the cylinders and with the discharge outlets when the cut-off bar is in a predetermined position and the communication ports therethrough are not in communication with the cylinder openings, one end of each of the communication ports being in constant communication with the hopper outlet regardless of the position of the slidable cut-off bar.

3. In a pump, a cylinder having an outlet, a piston in said cylinder, a housing, a cut-off bar

slidably mounted in said housing, a hopper to which said housing is attached, said hopper having an outlet opening, the cut-off bar being provided with a communication port having one end opening at one side of the bar and its second end opening at the top of the bar, the latter being adapted to register with the outlet opening in the cylinder when the slidable cut-off bar is in a predetermined position, the end of the communication port that is located at the side of the cut-off bar being in constant communication with the hopper outlet regardless of the position of the slidable cut-off bar, the cut-off bar having an outlet port adapted for alignment with the cylinder outlet when the communication port is disaligned from the cylinder outlet.

4. In a pump, a housing provided with a plurality of spaced cylinders, a piston mounted for reciprocating movement in each cylinder, each cylinder being provided with a lower outlet, a slidable cut-off bar mounted in the housing below the cylinder outlets, the cut-off bar being provided with a plurality of spaced vertically-disposed outlet ports passing through it, said ports being adapted for simultaneous alignment with the cylinder outlets when the cut-off bar is in a certain position and while the pistons are descending, the cut-off bar having angular communication ports located between the outlet ports, the communication ports being adapted to each have one end placed in communication with a cylinder outlet when the cut-off bar is in a certain position and while the pistons are ascending, a hopper having an outlet, the housing being connected to the hopper and having the second end of each of the communication ports in the cut-off bar in constant communication with the hopper outlet regardless of the position of the cut-off bar.

5. In a pump, a hopper having a slot-like outlet, a housing having a slot-like entrance opening extending co-extensively and in communication with the outlet of the hopper, a slidably mounted cut-off bar in the housing, said bar being provided with a plurality of communication ports, each of said ports having one end in constant

communication with the housing entrance opening and hence also in communication with the outlet of the hopper, a plurality of cylinders having openings adapted for registry with the second ends of the communication ports at times when the cut-off bar is in a certain position, the housing having discharge openings, and the cut-off bar having discharge ports situated intermediately of the communication ports, the discharge ports being adapted for registry with the cylinder openings and the discharge openings when the cut-off bar is in a certain position and when the communication ports are not in communication with the cylinder openings.

6. In a pump of the character described, a pair of cylinders, a housing in which said cylinders are provided, a piston mounted for reciprocation in each cylinder, each cylinder having an outlet opening at its lower end, a cut-off bar slidable in the housing below said outlet openings, a hopper provided with a slot-like outlet opening, the housing having a slot-like inlet in communication with the outlet opening, the cut-off bar being provided with a plurality of transverse slots each having one end in constant communication with the slot-like inlet of the housing, the upper ends of each of the slots being placed in communication with the outlet openings of the pair of cylinders only at predetermined times by slidable movement of the cut-off bar, and the cut-off bar having discharge openings extending through it for registry with the outlet openings of the cylinders when the upper ends of the slots are out of registry therewith.

GEORGE S. PERKINS.

REFERENCES CITED

The following references are of record in the file of this patent:

UNITED STATES PATENTS

Number	Name	Date
208,645	Spencer	Oct. 1, 1878
2,074,041	Baldwin	Mar. 16, 1937