US 20080065092A1

(19) United States

(12) Patent Application Publication

(10) Pub. No.: US 2008/0065092 A1

(43) Pub. Date: Mar. 13, 2008

Assell et al.

(54) **ACCESS ASSEMBLY FOR GUIDING INSTRUMENTATION THROUGH SOFT TISSUE TO A POINT ON THE SPINE**

(75) Inventors: **Robert L. Assell**, Wilmington, NC (US); **Stephen D. Ainsworth**, Wilmington, NC (US); **Andrew H. Cragg**, Edina, MN (US); **Eugene A. Dickhudt**, St. Paul, MN (US)

Correspondence Address:
KNOBBE MARTENS OLSON & BEAR LLP
2040 MAIN STREET
FOURTEENTH FLOOR
IRVINE, CA 92614 (US)

(73) Assignee: **TranS1 INC.**, Wilmington, NC (US)

(21) Appl. No.: **11/940,252**

(22) Filed: **Nov. 14, 2007**

Related U.S. Application Data

(62) Division of application No. 10/971,779, filed on Oct. 22, 2004.

(60) Provisional application No. 60/513,899, filed on Oct. 23, 2003.

Publication Classification

(51) **Int. Cl.**
A61B 17/90 (2006.01)

(52) **U.S. Cl.** **606/96**

(57) **ABSTRACT**

Disclosed are surgical tools, tool sets and methods for percutaneously accessing and preparing treatment sites within the spine for subsequent treatment procedures. The treatment site may be an inter-vertebral motion segments in the lumbar and sacral regions of the spine. The tool set may comprise introducer tools and bone dilators for accessing and tapping into a targeted site, such as, for example, the anterior surface of the S1 vertebral body. The tool set may also comprise cutters and extractors for preparing the treatment site for subsequent treatment procedures. The tool set may additionally comprise a bone graft inserter, an exchange system, and/or a temporary distraction tool for further preparing the treatment site for subsequent treatment procedures.

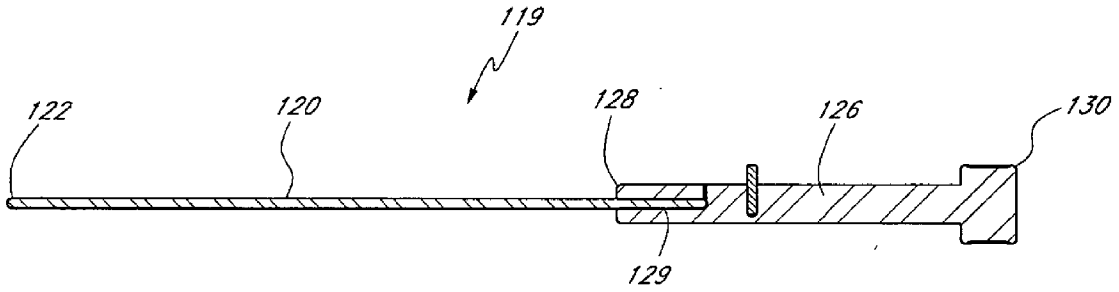

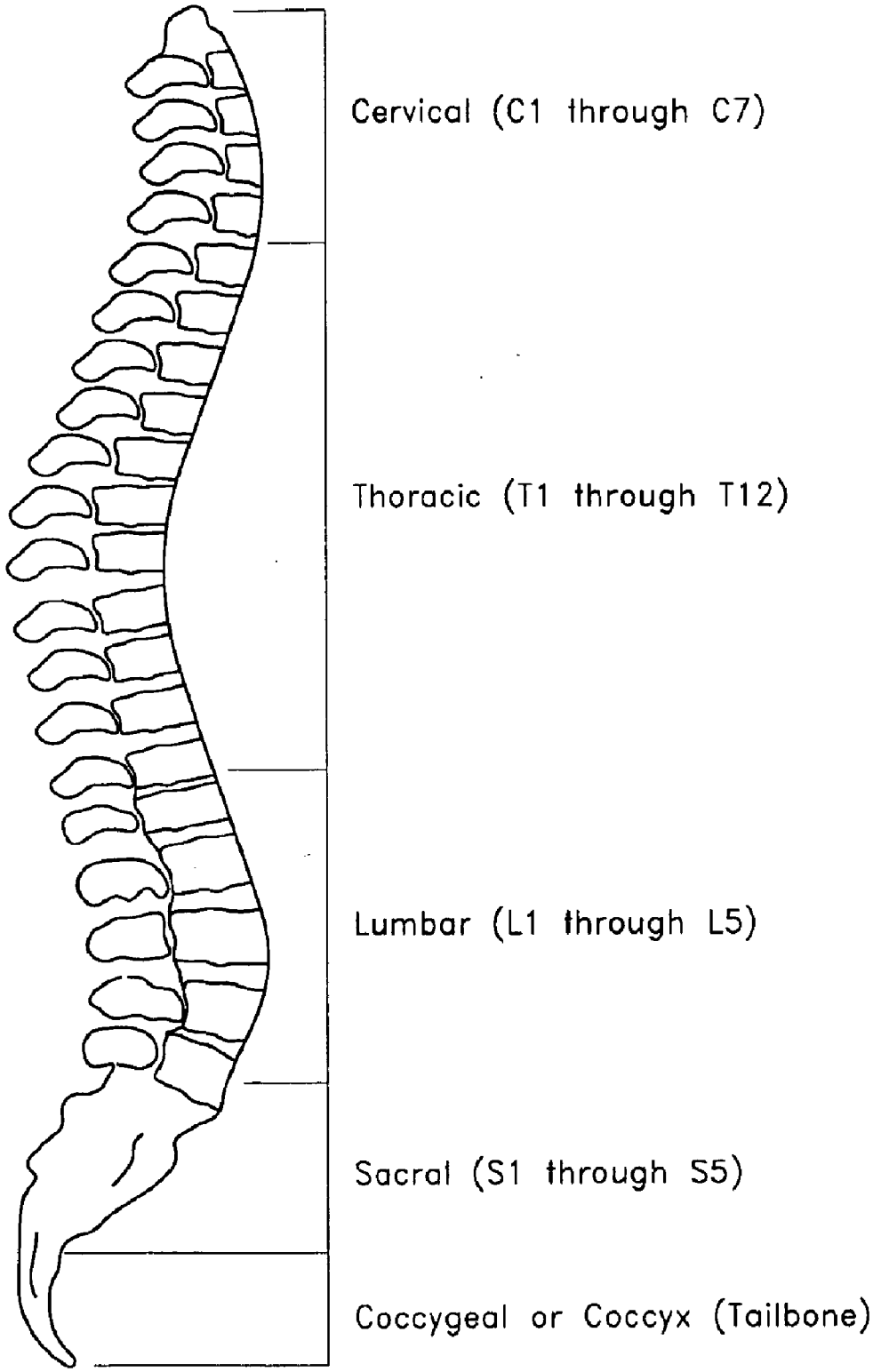
Cervical (C1 through C7)
Thoracic (T1 through T12)
Lumbar (L1 through L5)
Sacral (S1 through S5)
Coccygeal or Coccyx (Tailbone)

FIG. 1A

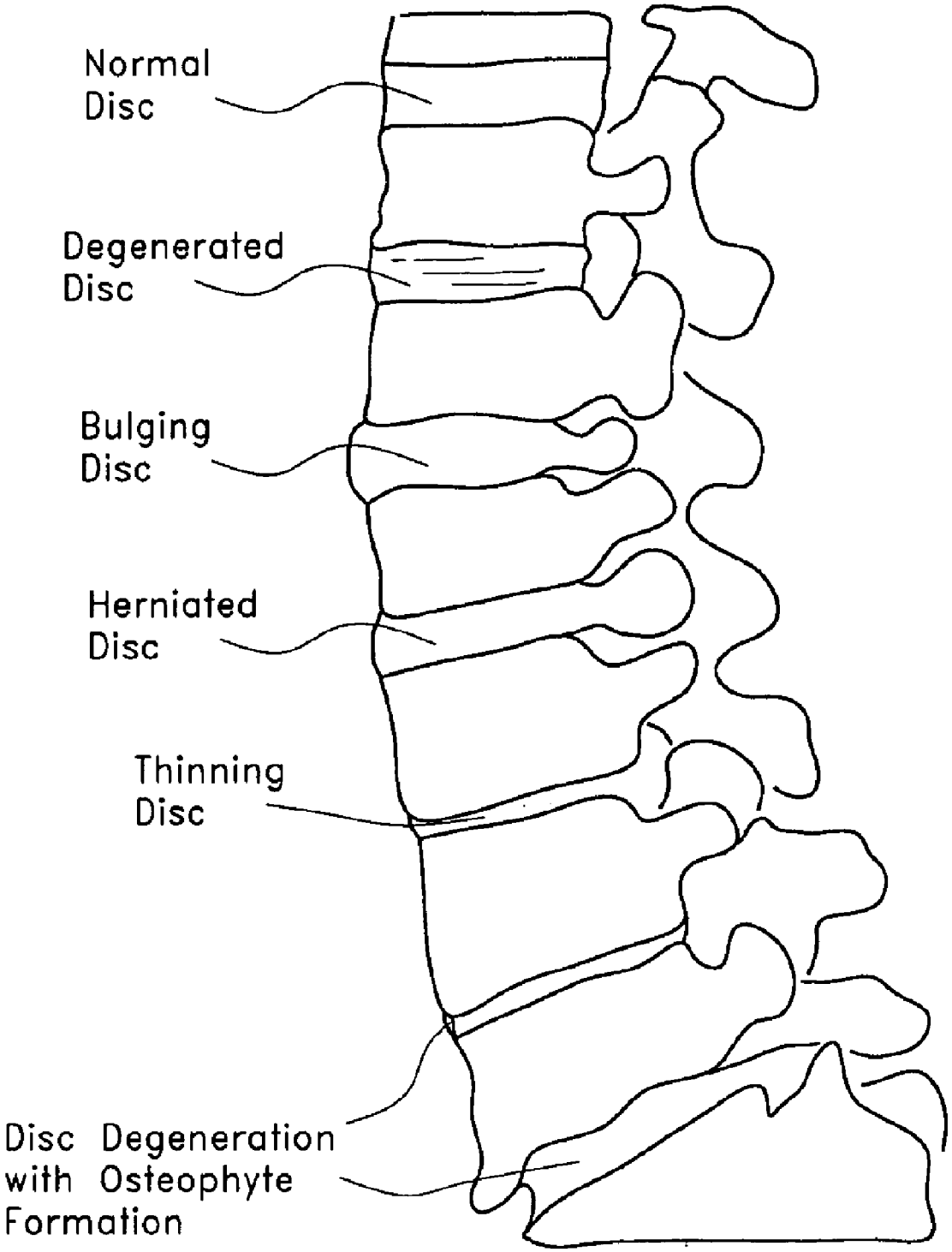
Normal
Disc
Degenerated
Disc
Bulging
Disc
Herniated
Disc
Thinning
Disc
Disc Degeneration
with Osteophyte
Formation

FIG. 1B

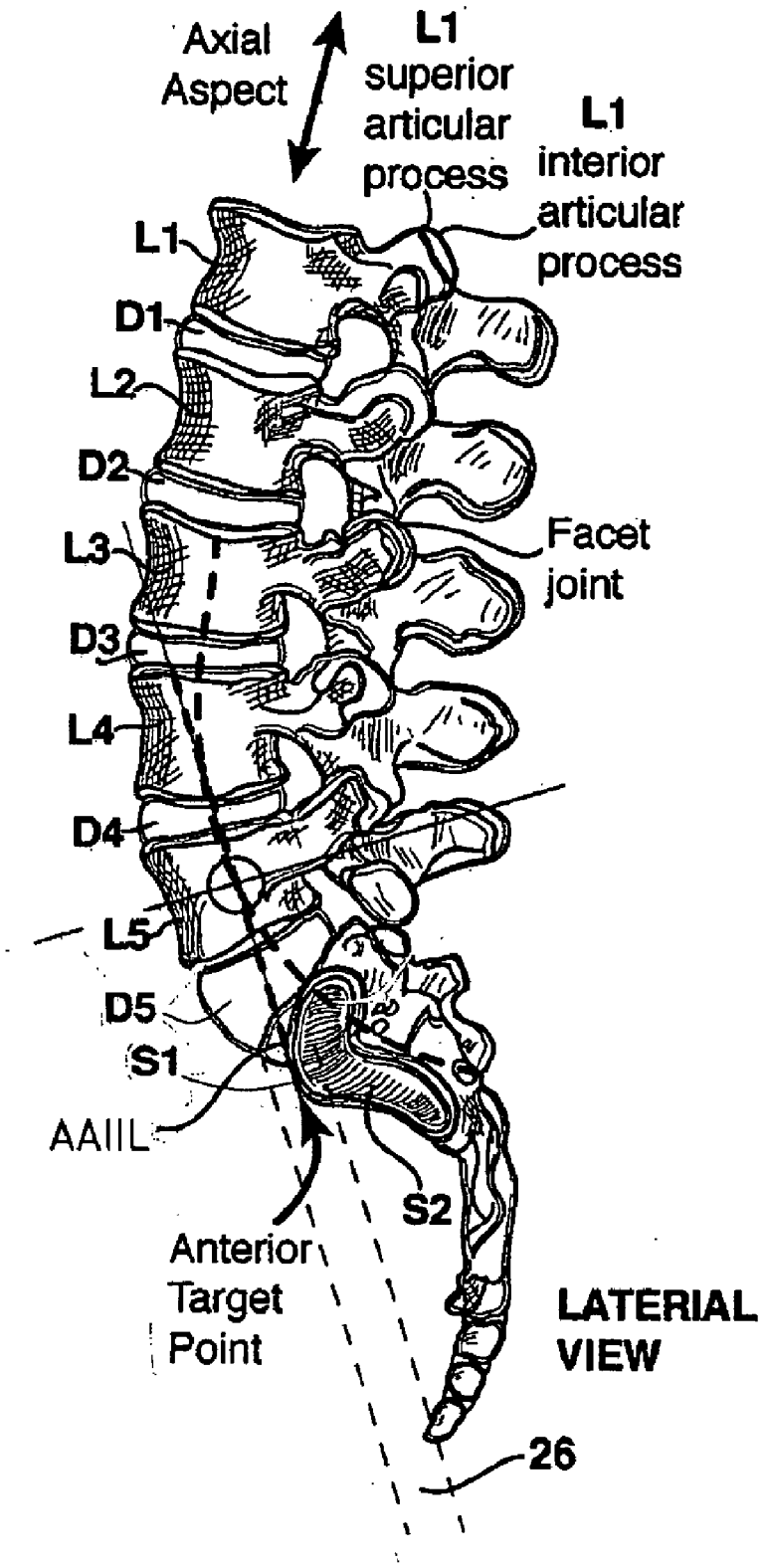
Axial
Aspect
L1
superior
articular
process
L1
interior
articular
process
L1
D1
L2
D2
L3
D3
L4
D4
L5
D5
S1
AAIIL
Facet
joint
S2
Anterior
Target
Point
LATERIAL
VIEW
26

FIG. 1C

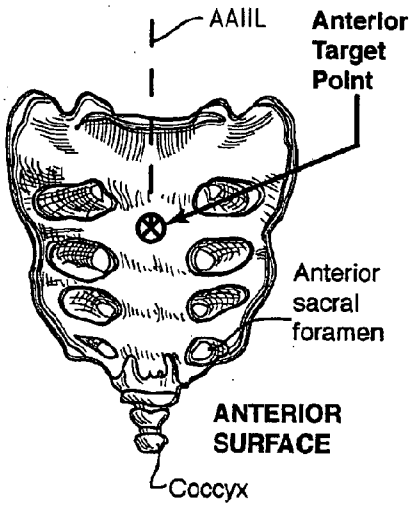

FIG. 1D

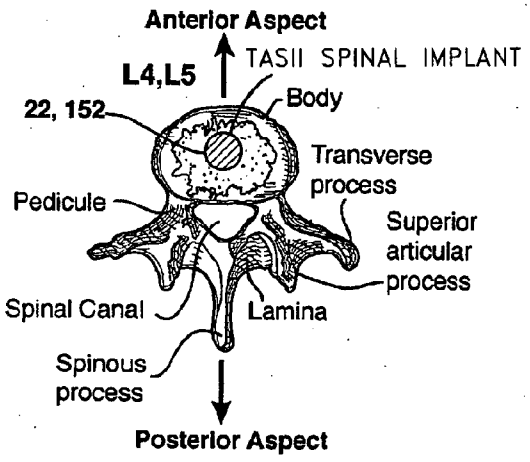

FIG. 1E

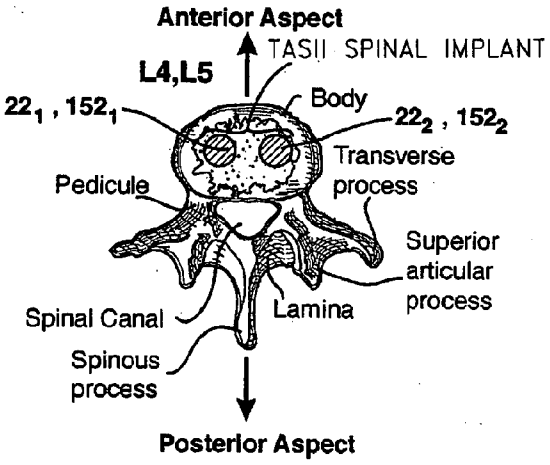

FIG. 1F

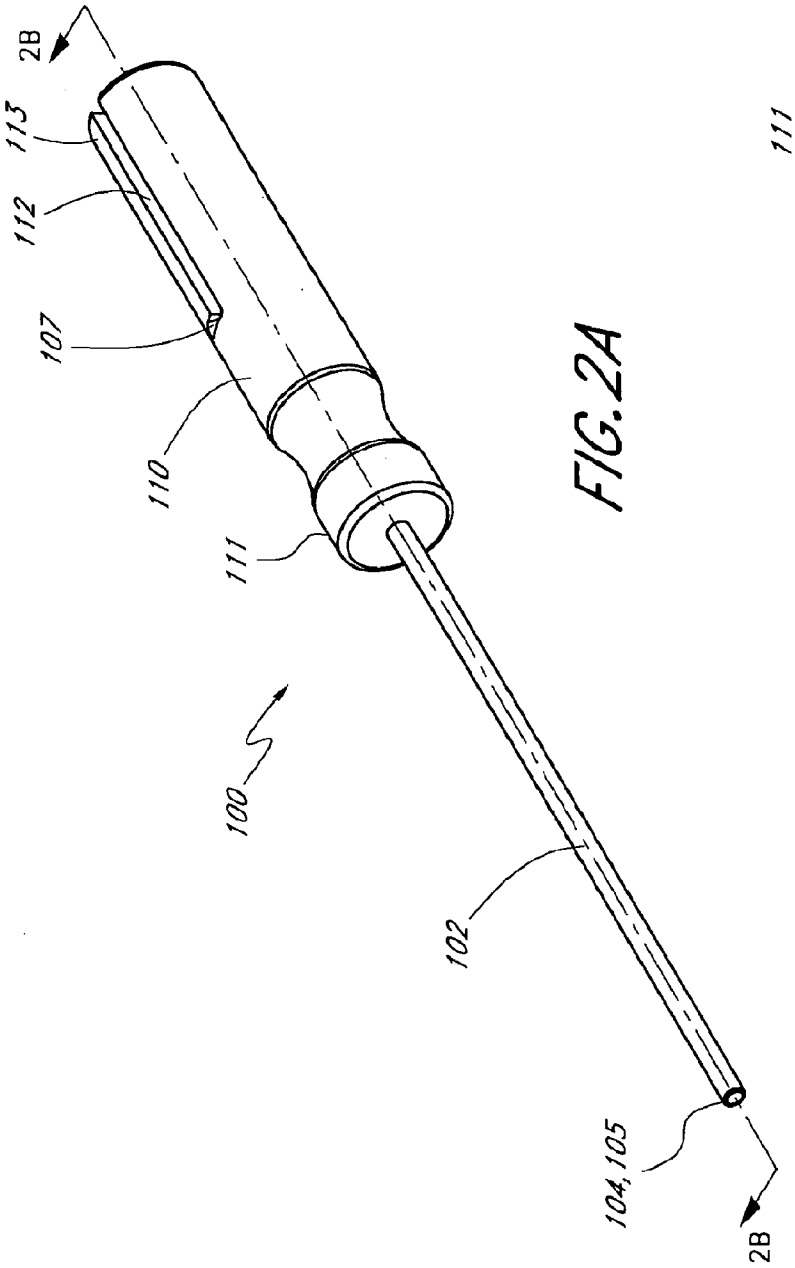
2B
113
112
107
110
111
100
102
104, 105
2B

FIG. 2A

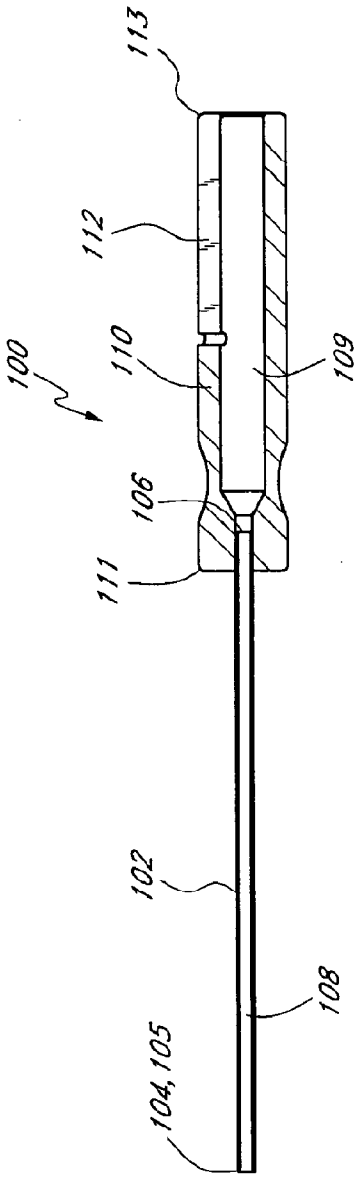
113
112
100
110
109
106
111
102
108
104, 105

FIG. 2B

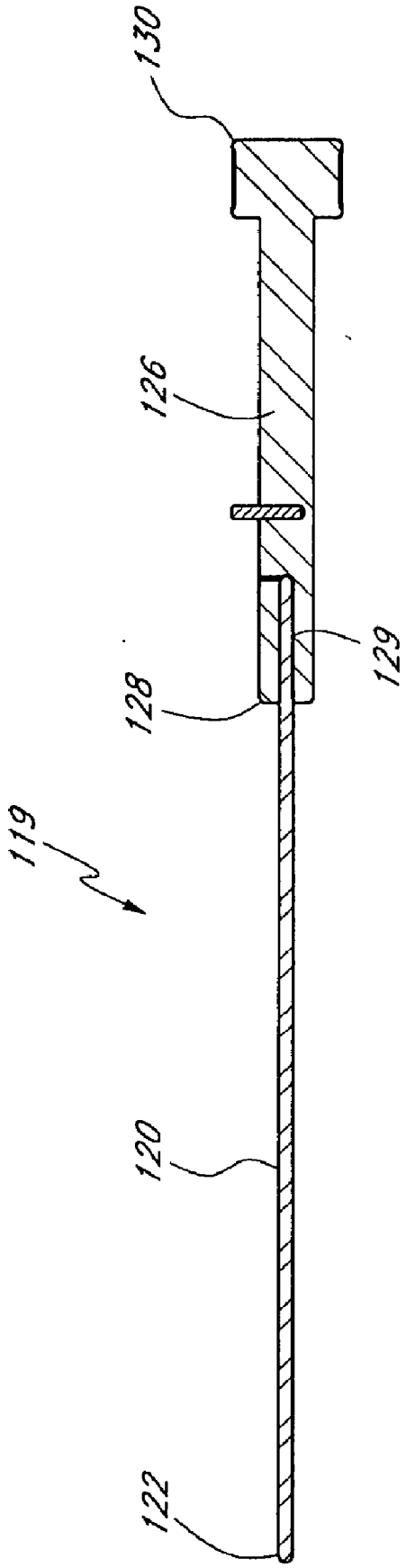

FIG. 2C

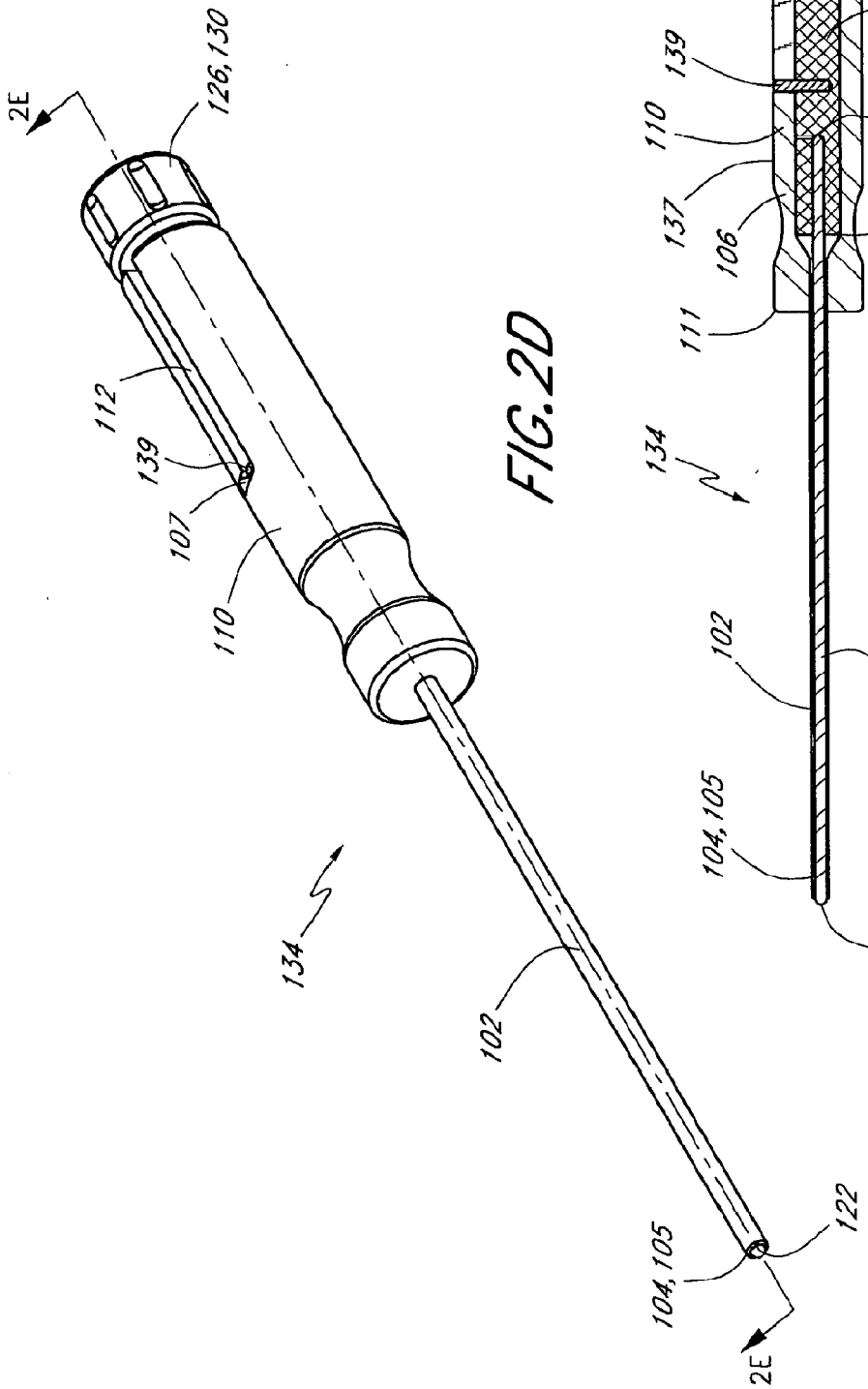
2E
126,130
112
139
107
110
134
102
104,105
122
2E

FIG. 2D

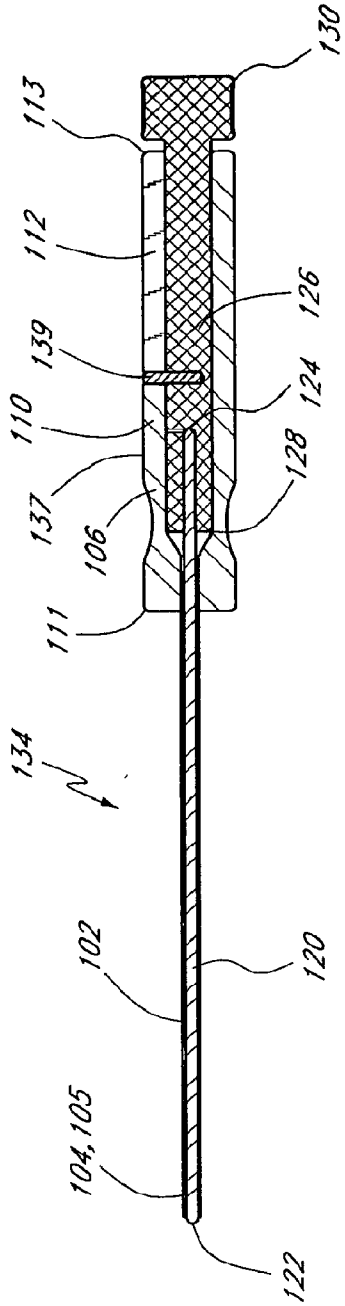
130
113
112
126
139
124
110
128
137
106
111
134
102
120
104,105
122

FIG. 2E

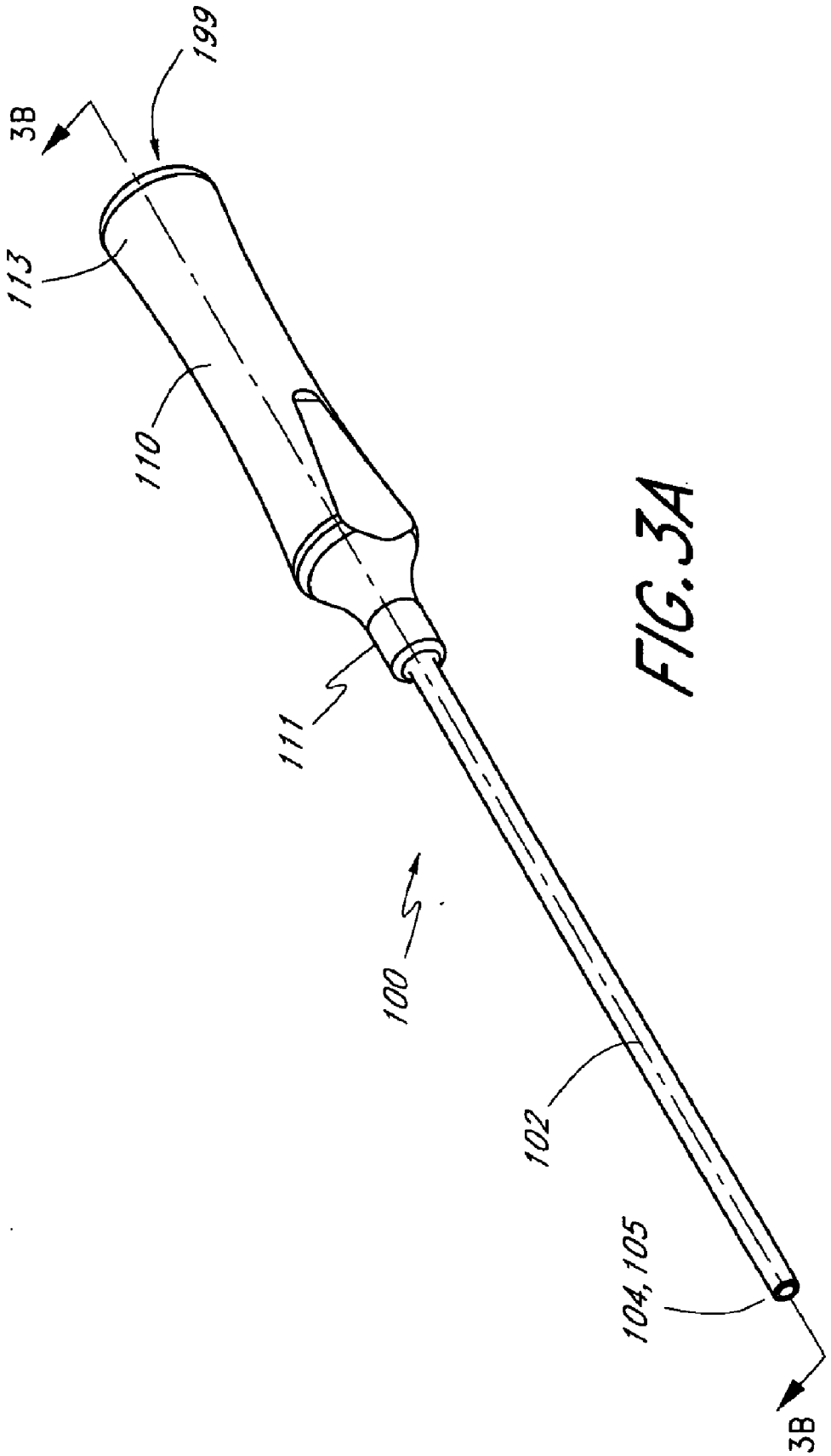

FIG. 3A

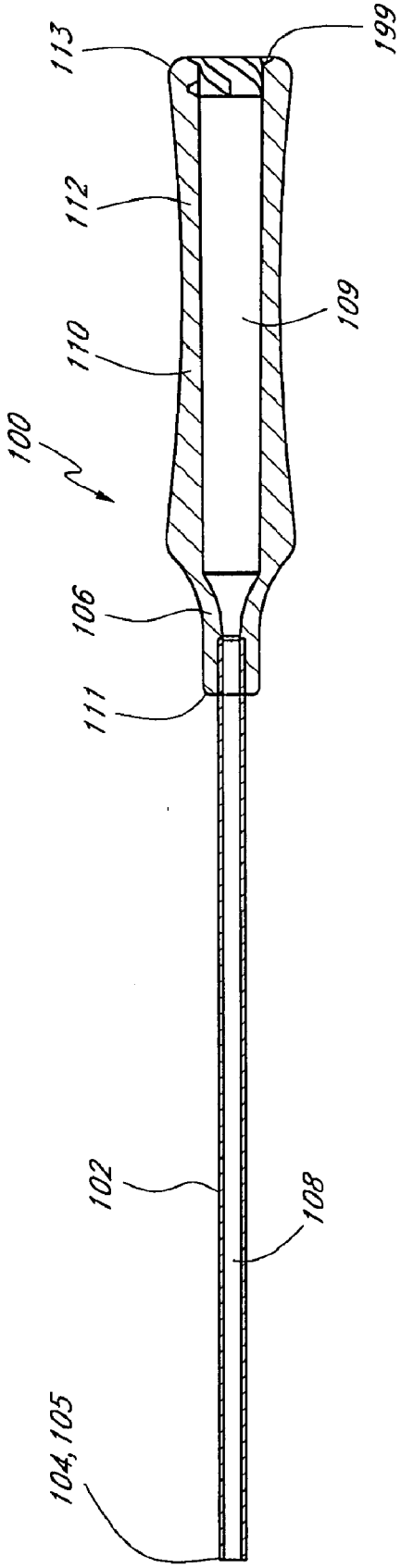

FIG. 3B

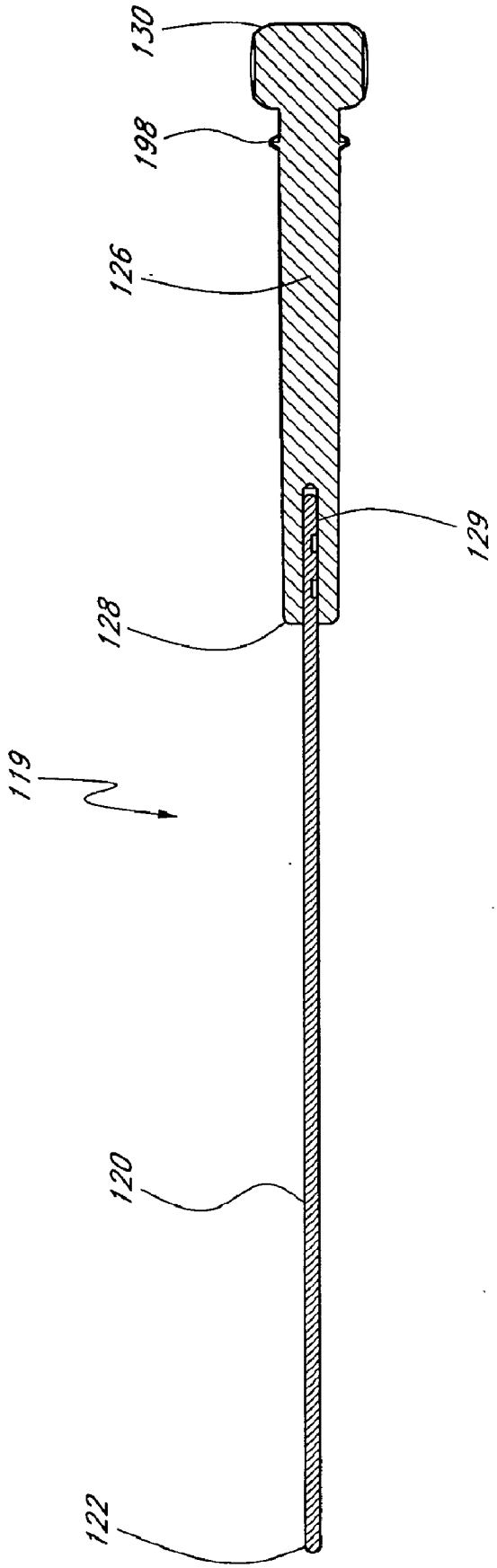

FIG. 3C

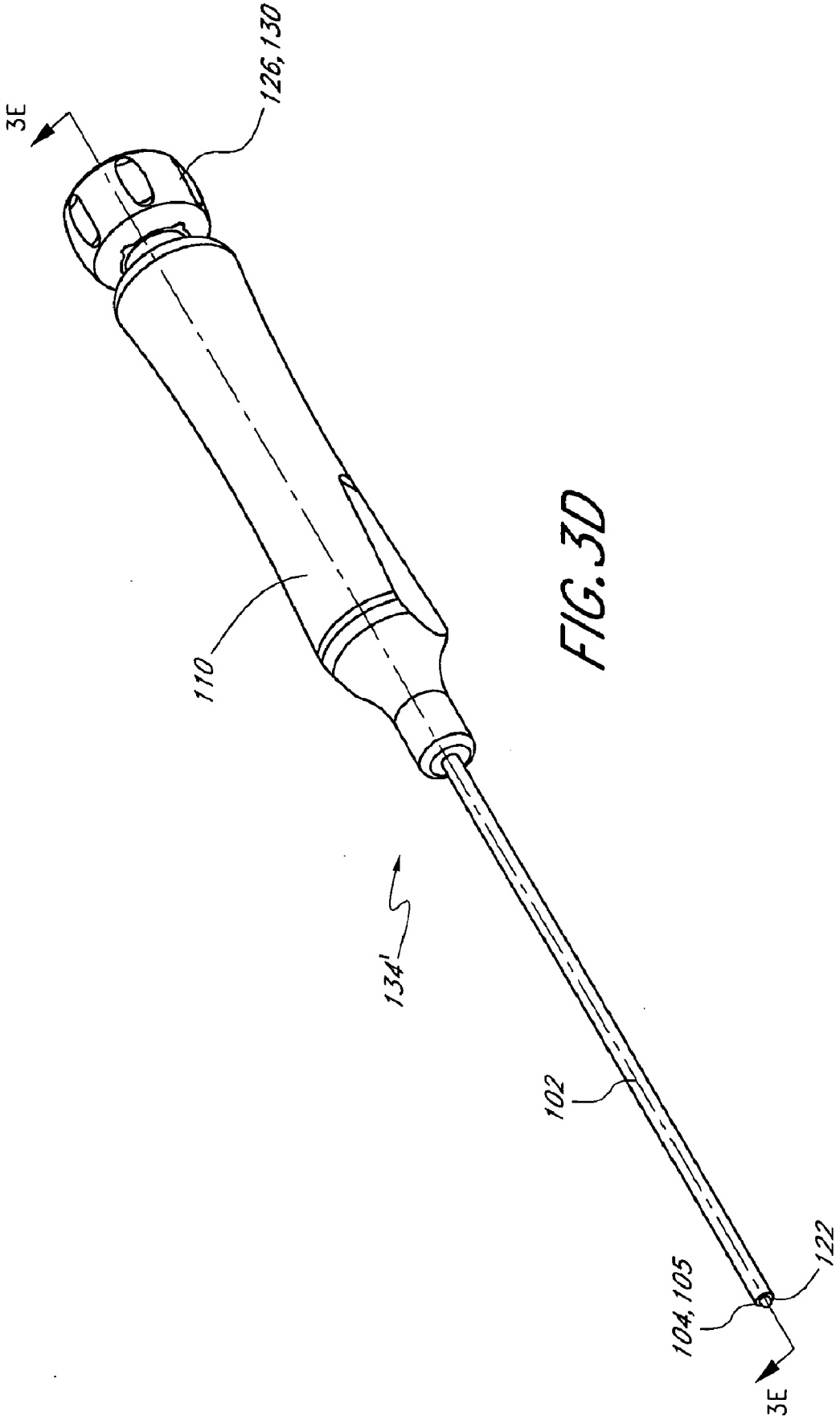

FIG. 3D

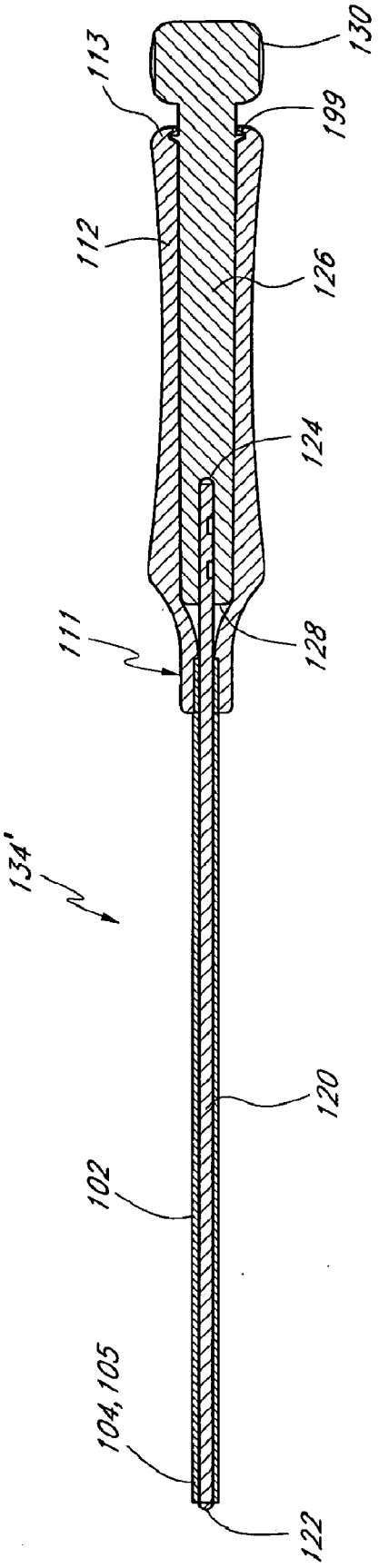

FIG. 3E

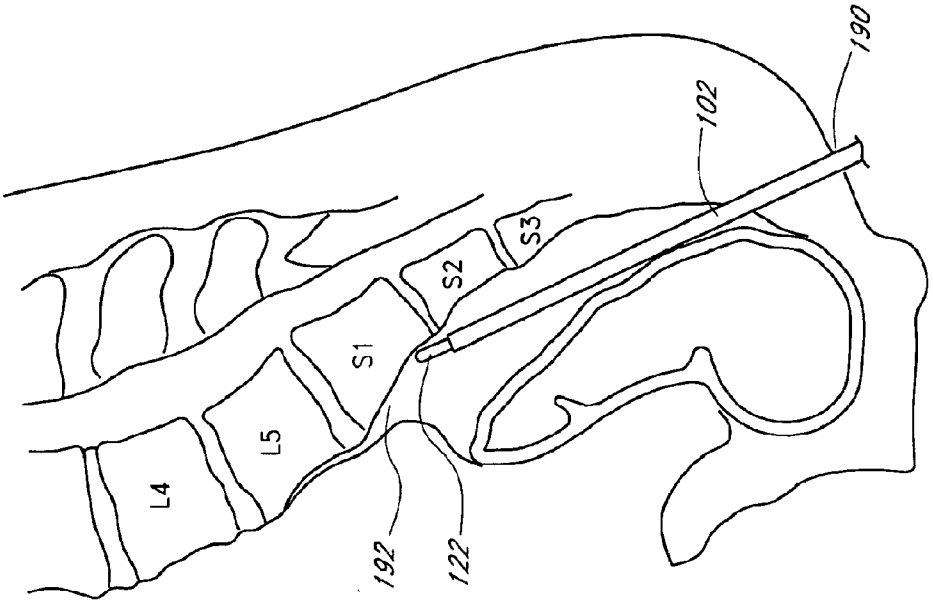

FIG. 5

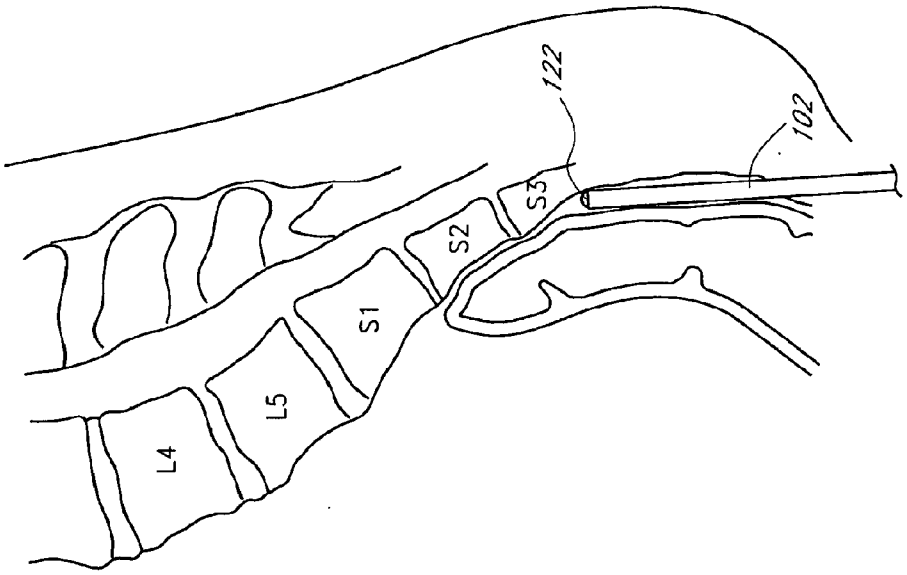

FIG. 4

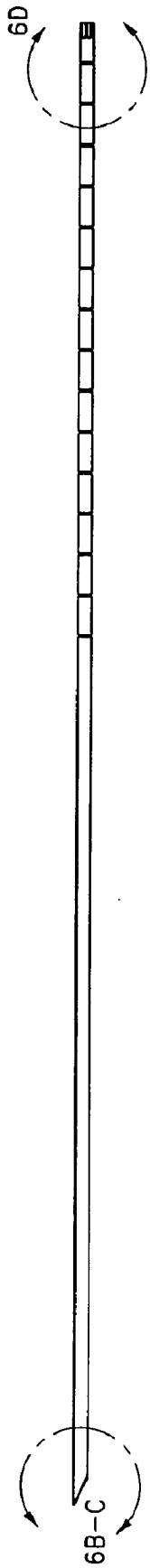

FIG. 6A

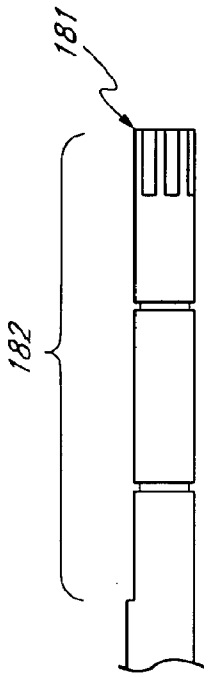

FIG. 6D

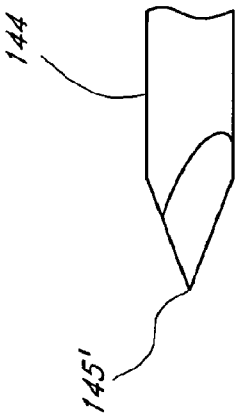

FIG. 6B

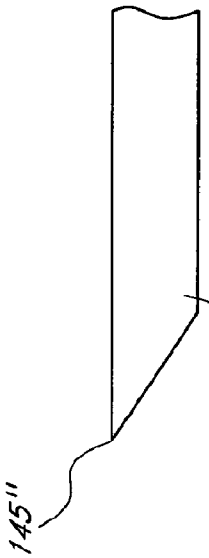

FIG. 6C

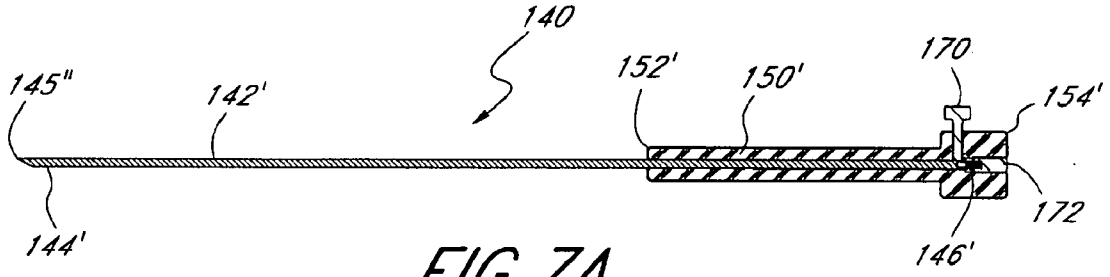

FIG. 7A

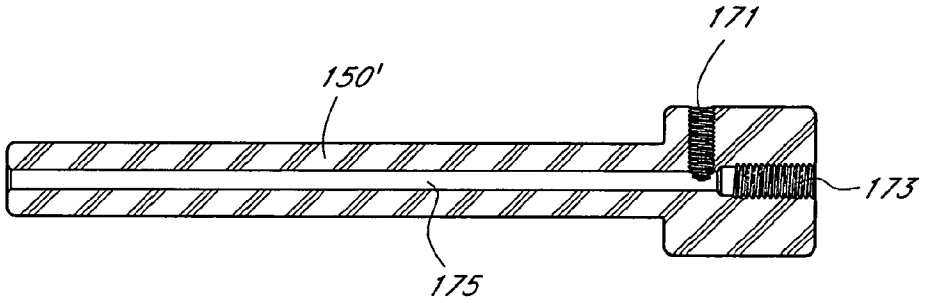

FIG. 7B

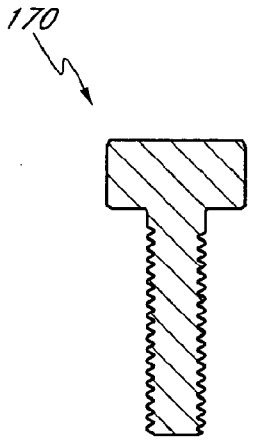

FIG. 7C

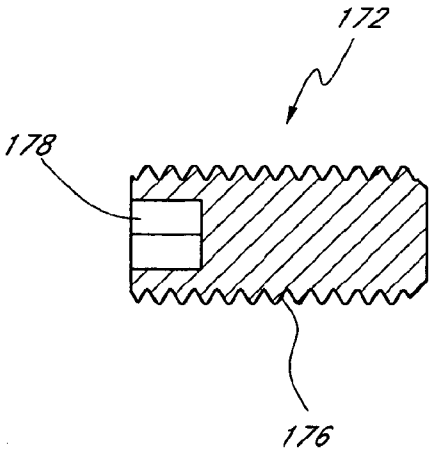

FIG. 7D

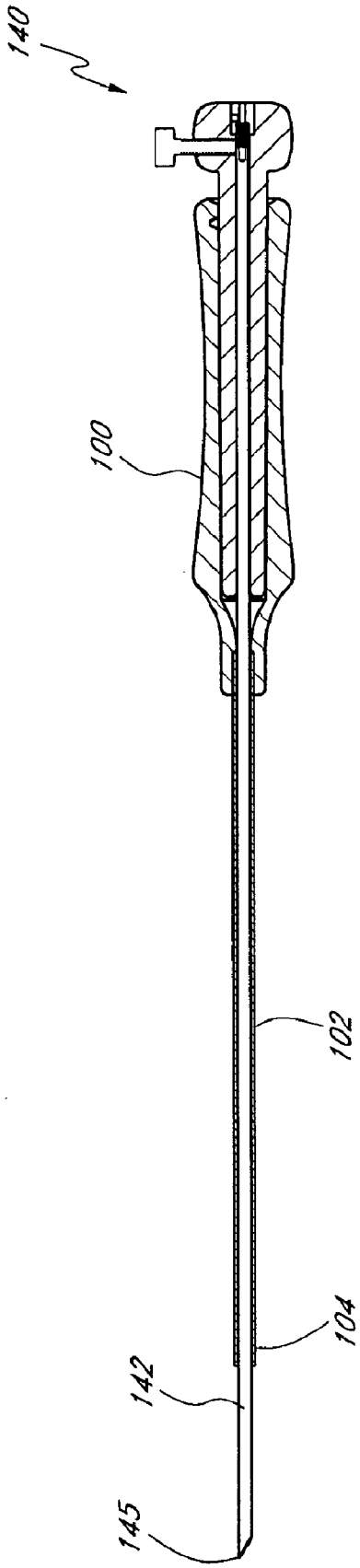

FIG. 7E

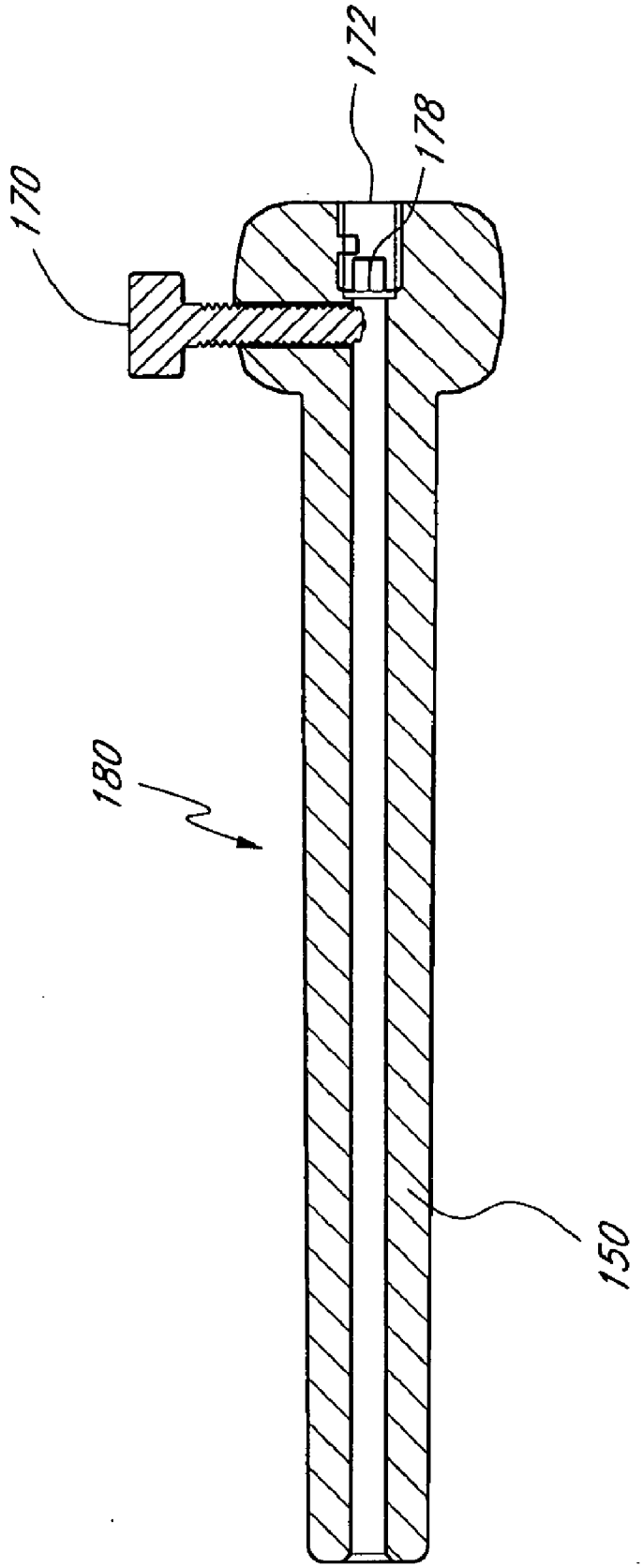

FIG. 7F

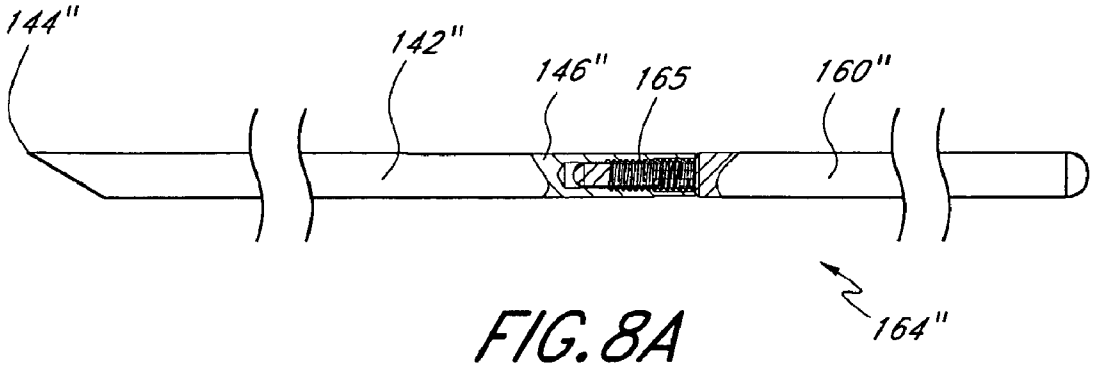

FIG. 8A

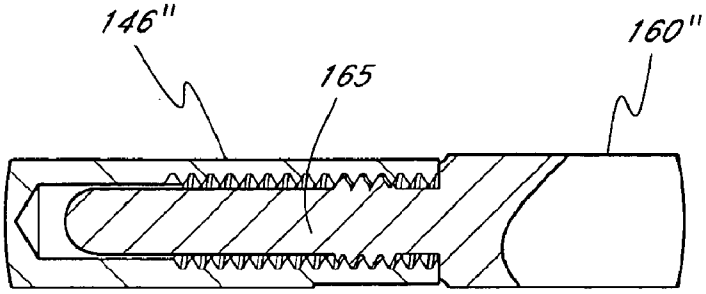

FIG. 8B

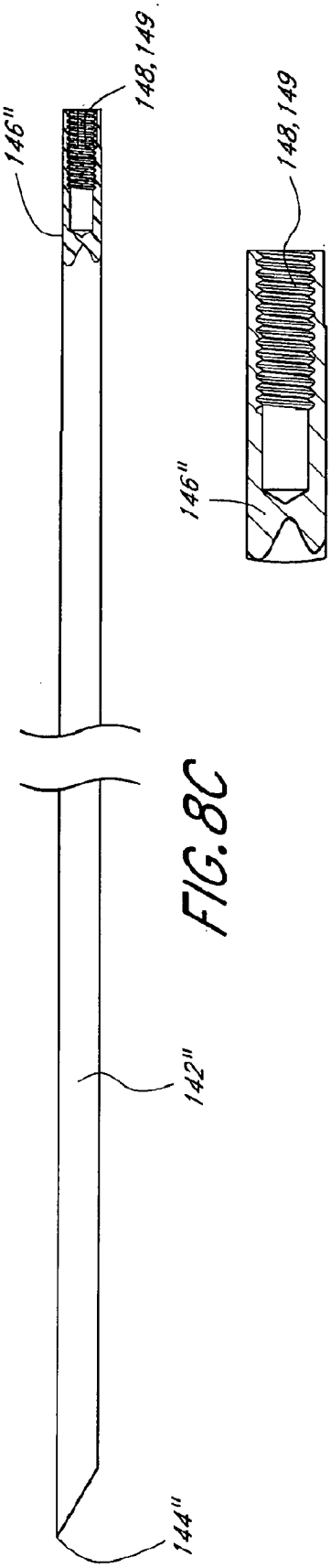

FIG. 8C

FIG. 8D

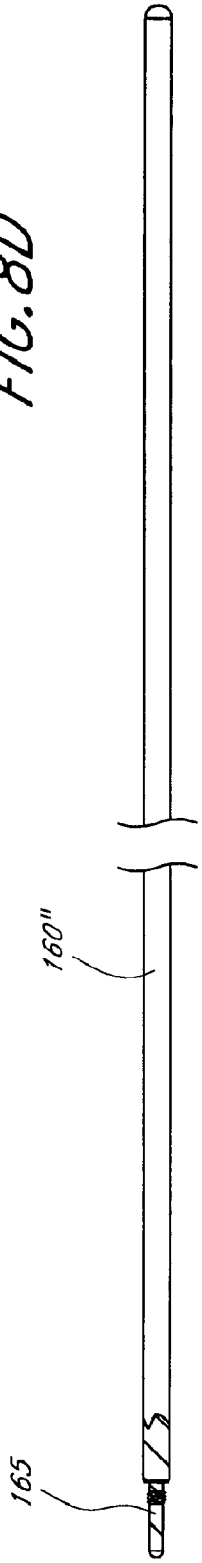

FIG. 8E

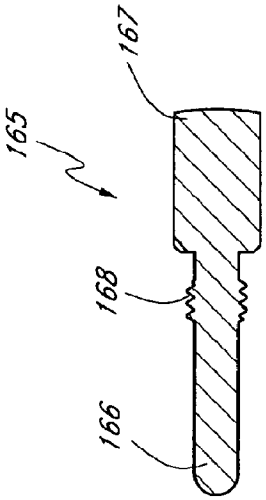

FIG. 8F

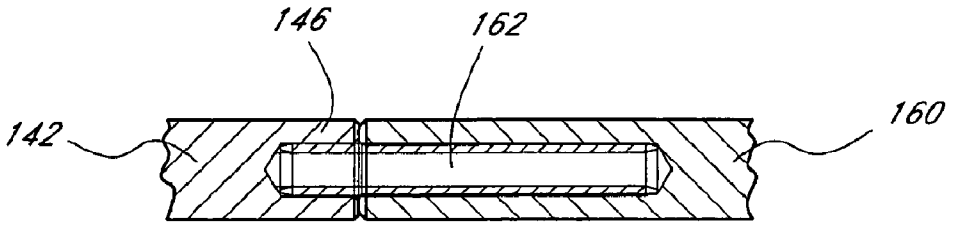

FIG. 8G

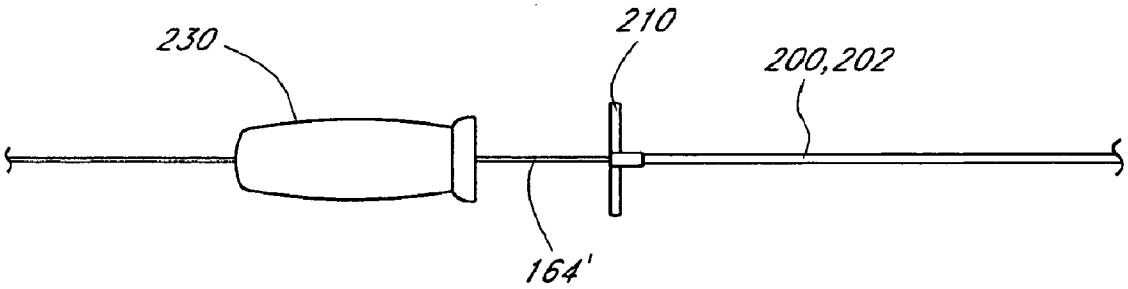

FIG. 9

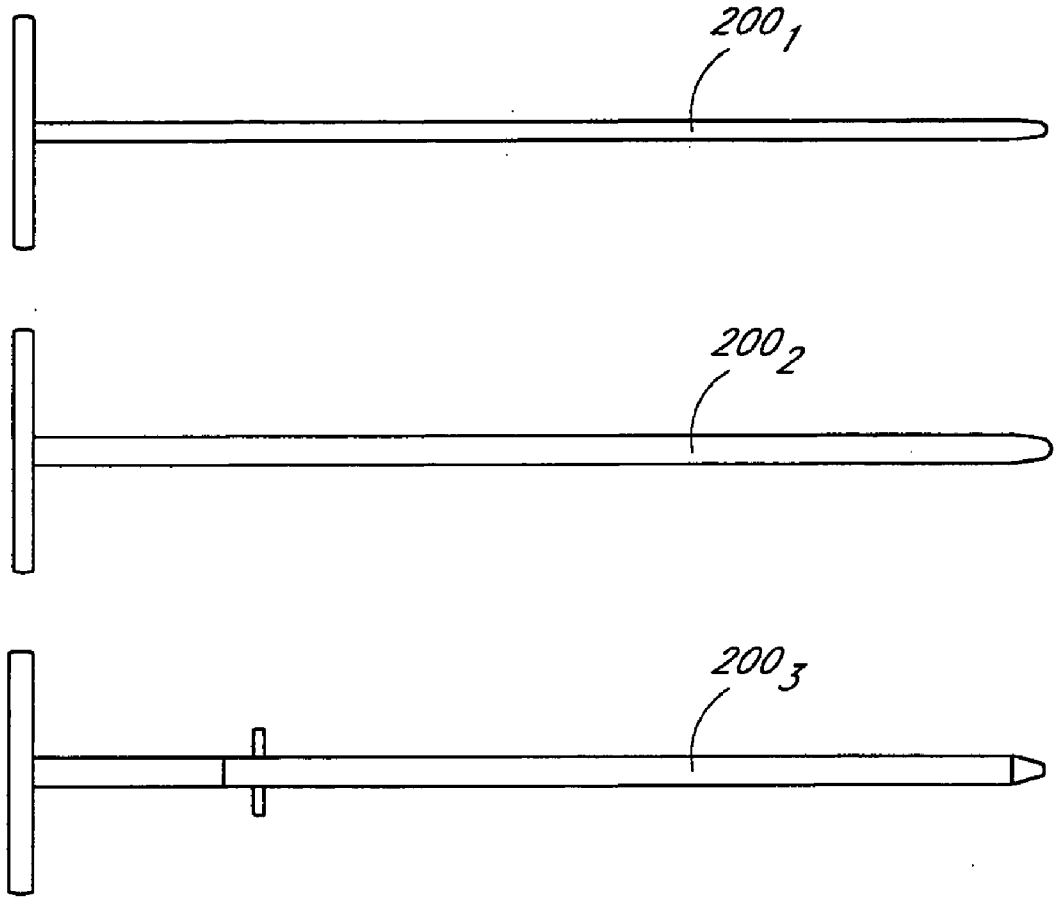

FIG. 10

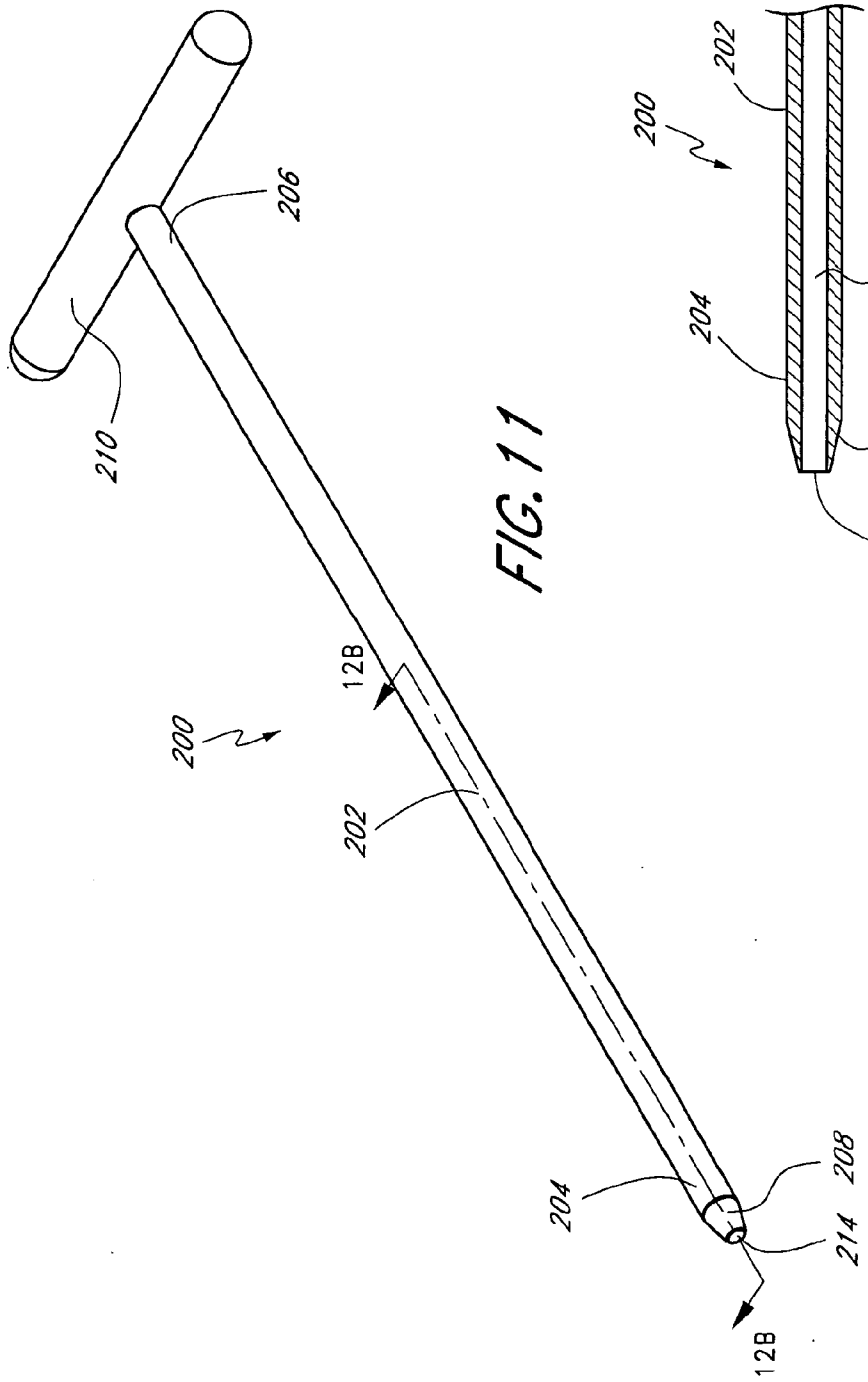

FIG. 11

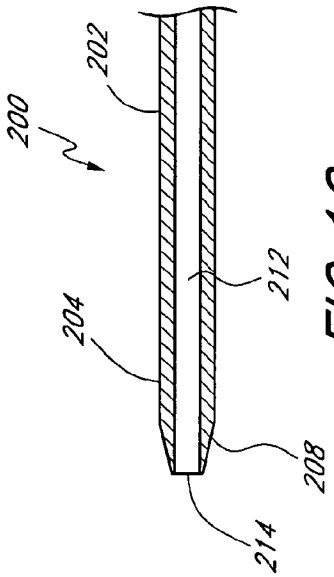

FIG. 12

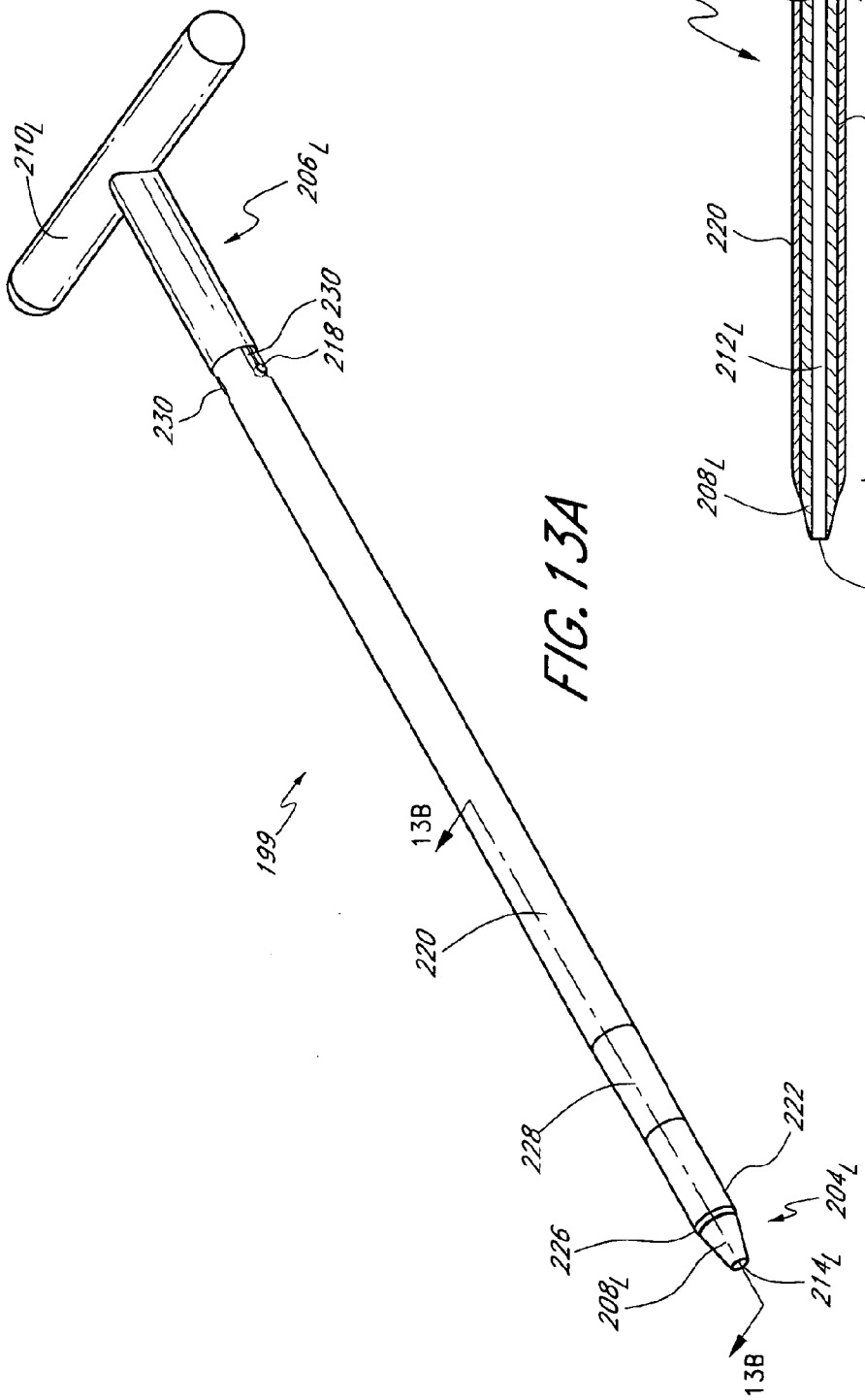

FIG. 13A

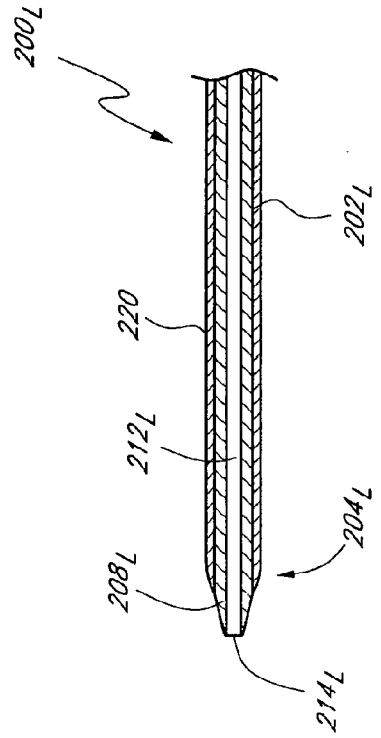

FIG. 13B

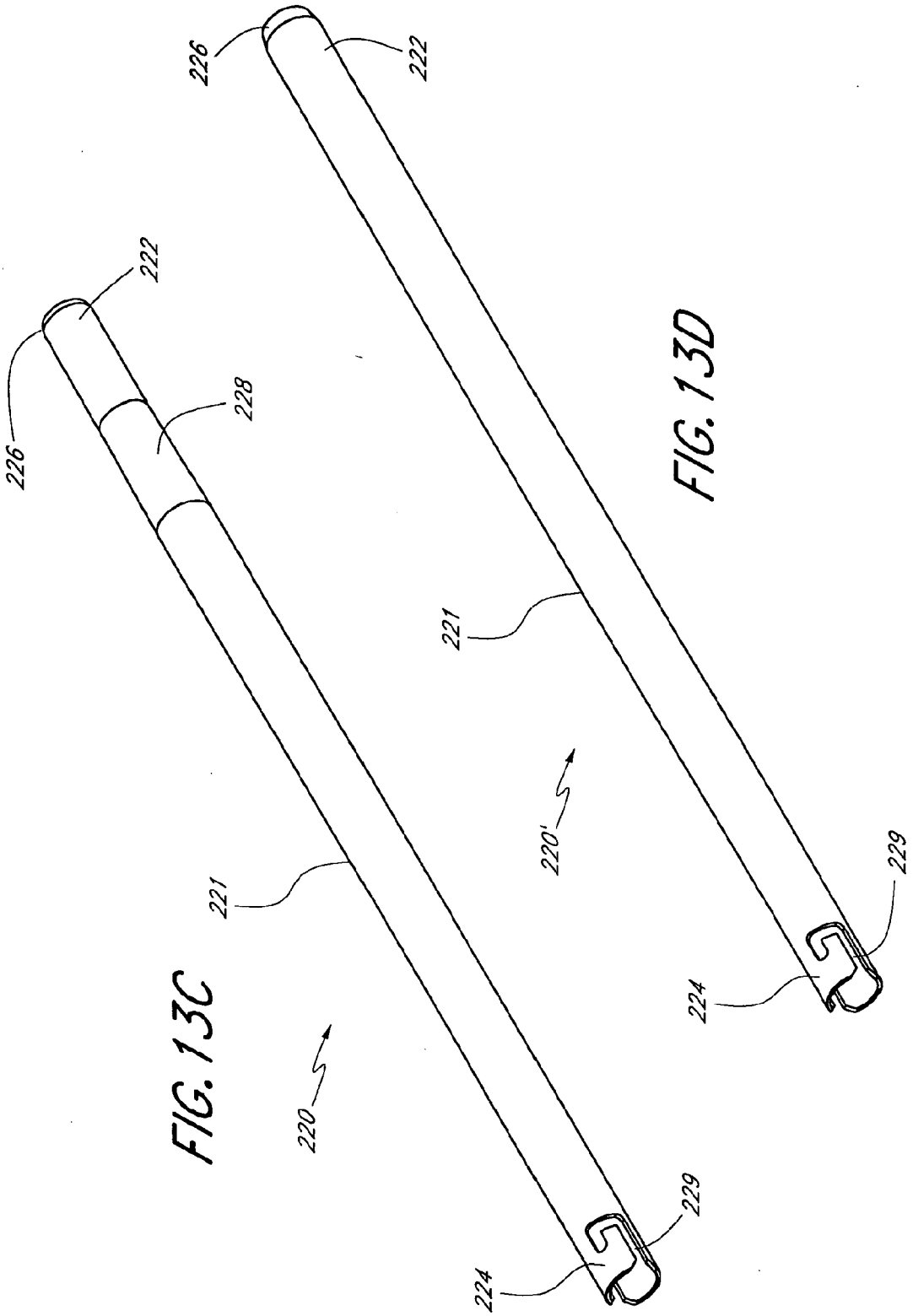

FIG. 13C

FIG. 13D

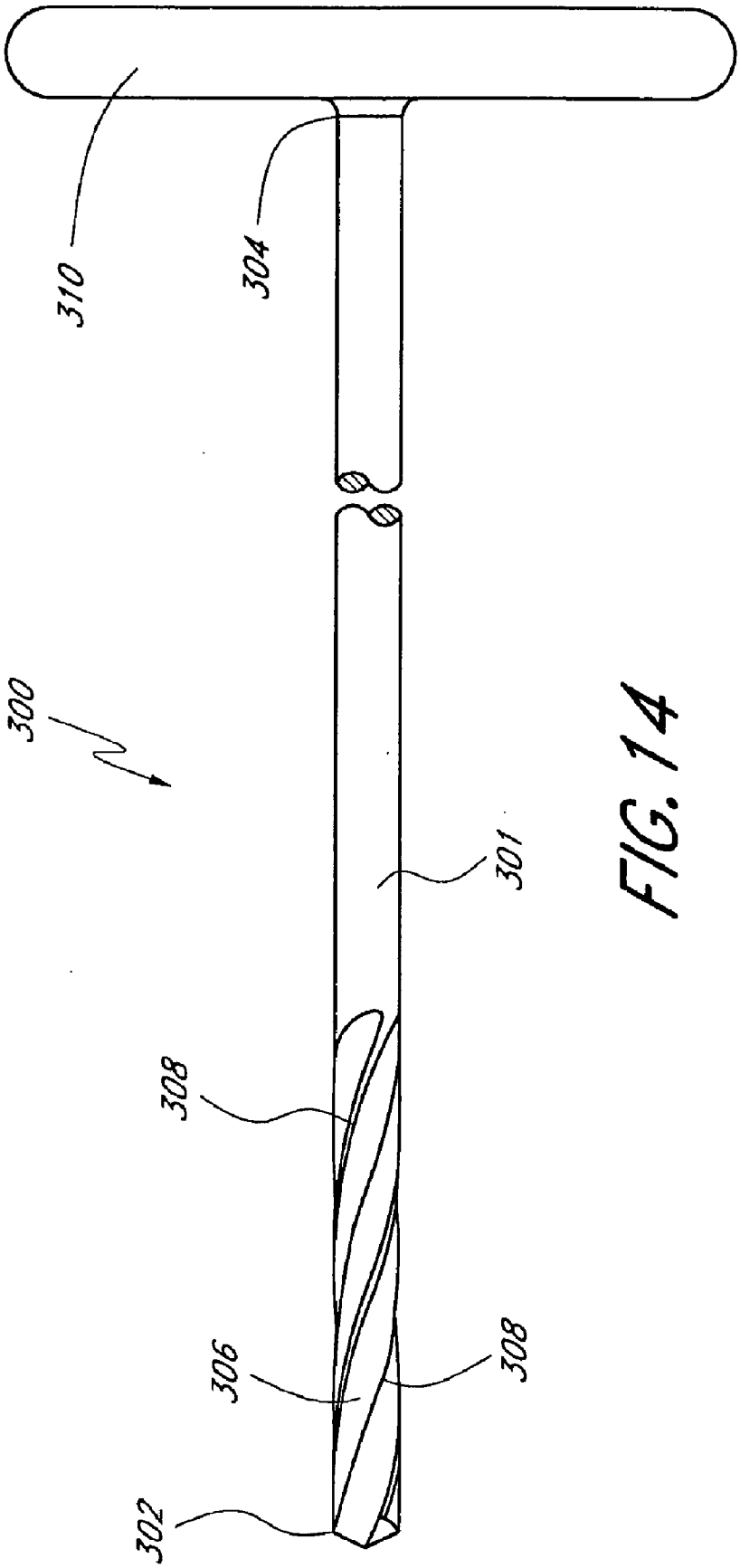

FIG. 14

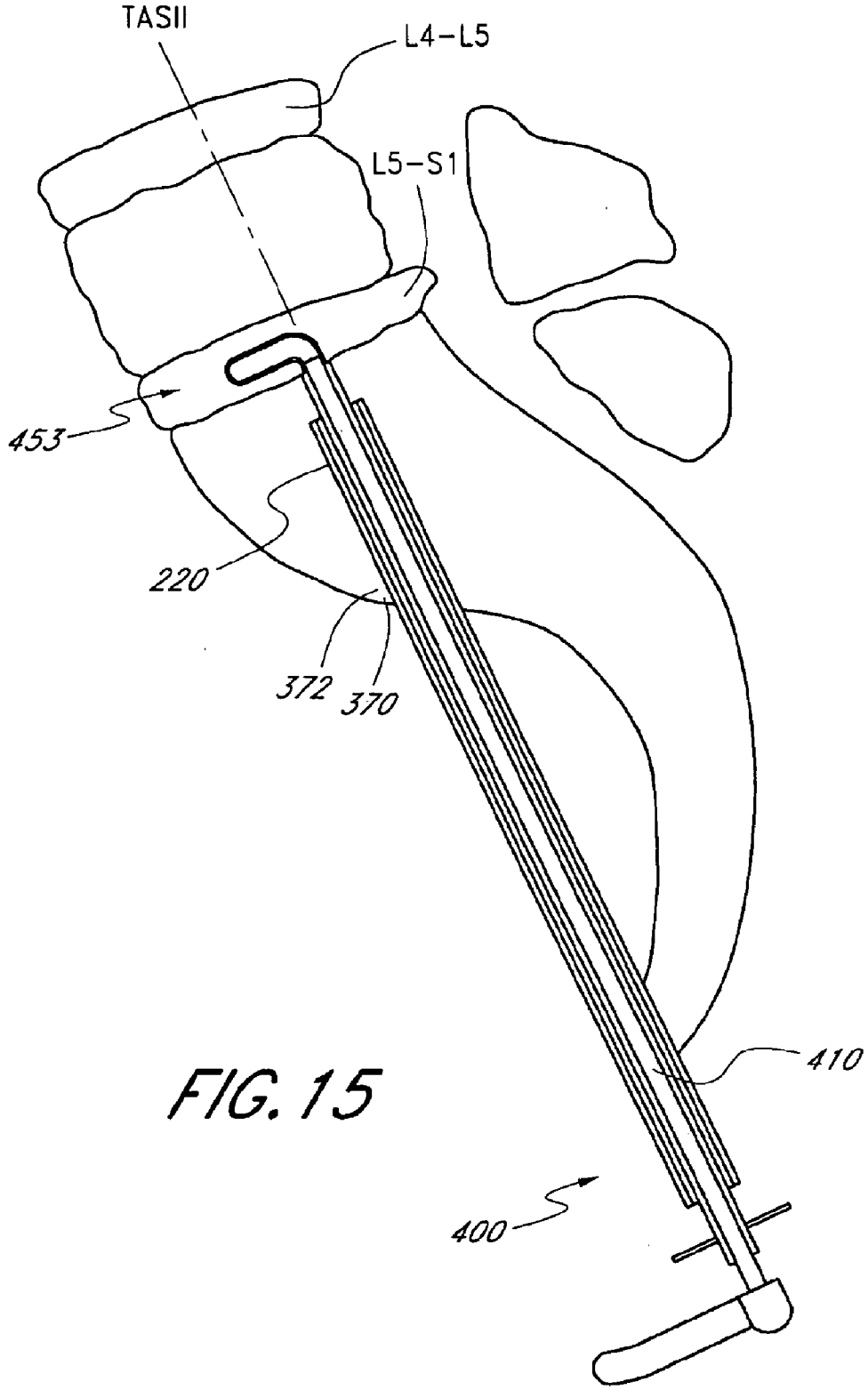

FIG. 15

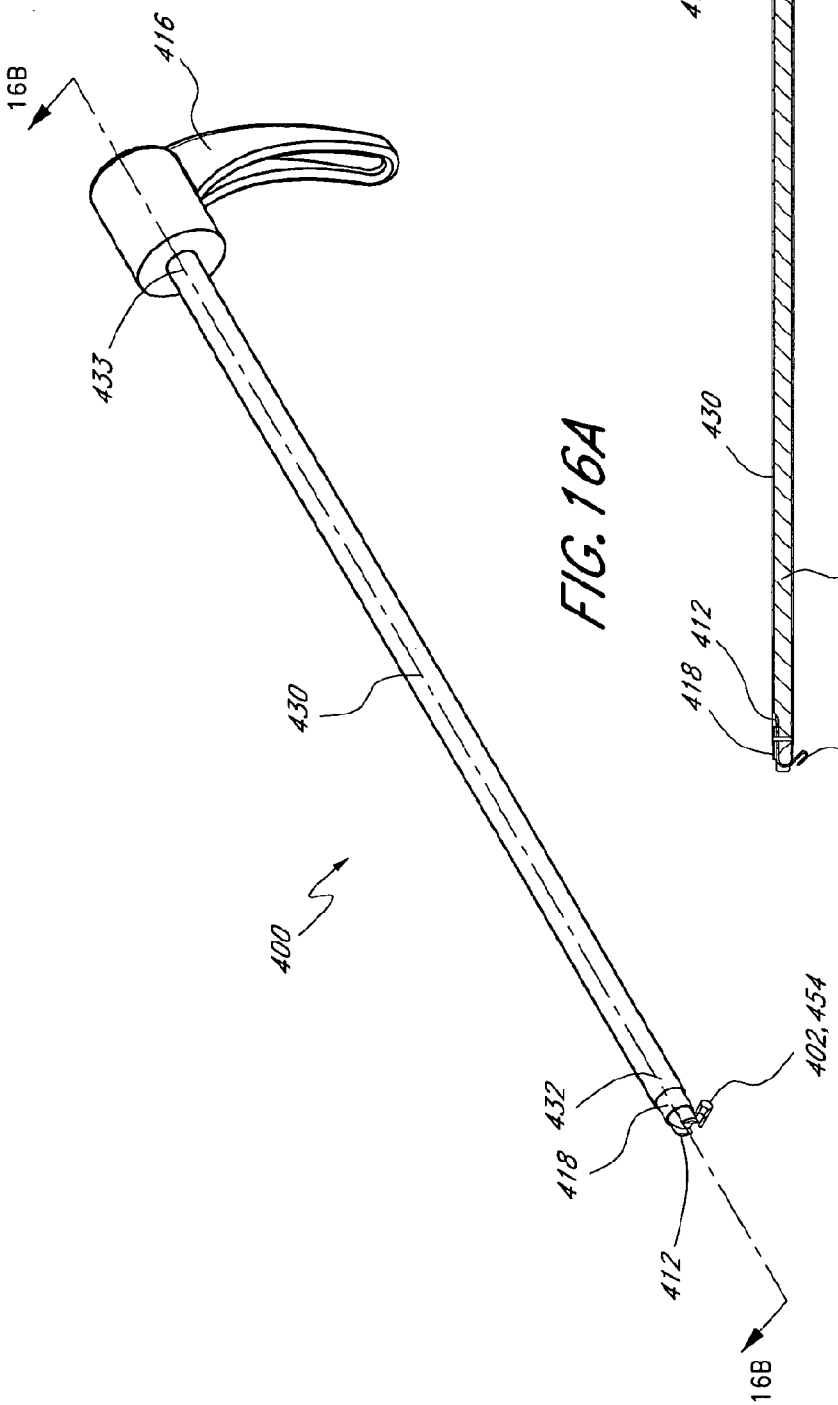

FIG. 16A

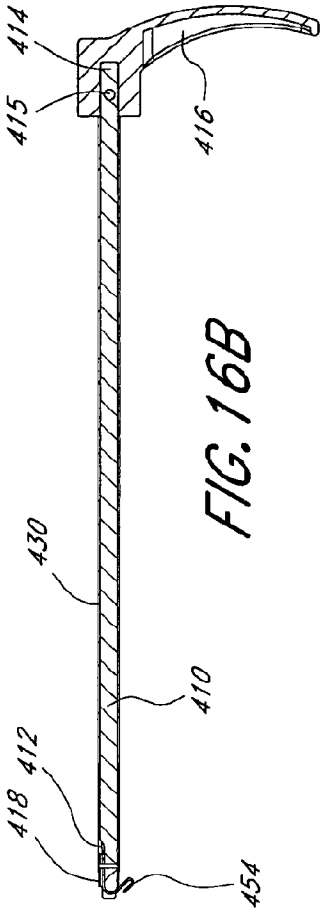

FIG. 16B

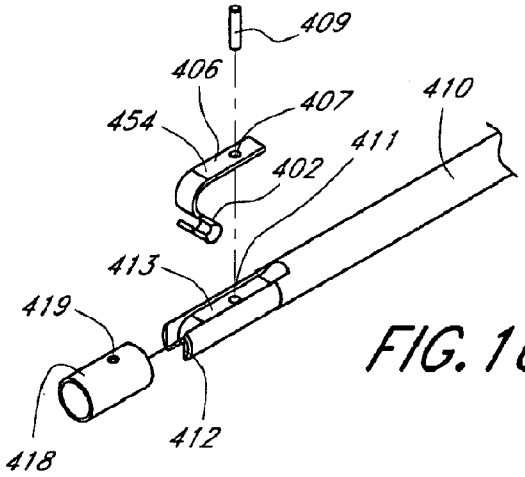

FIG. 16C

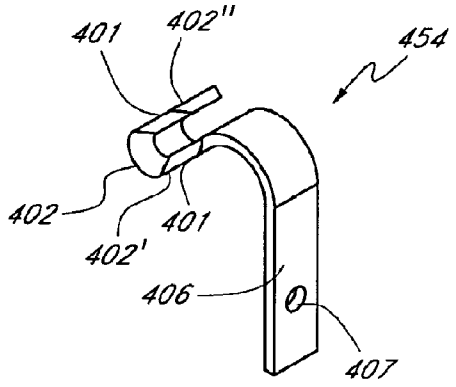

FIG. 16D

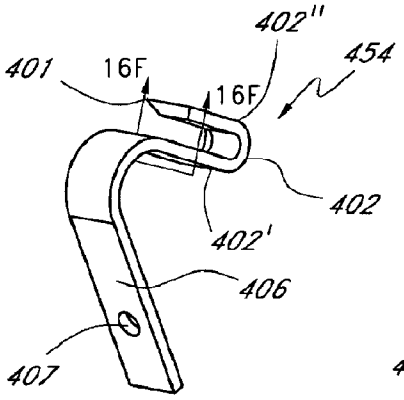

FIG. 16E

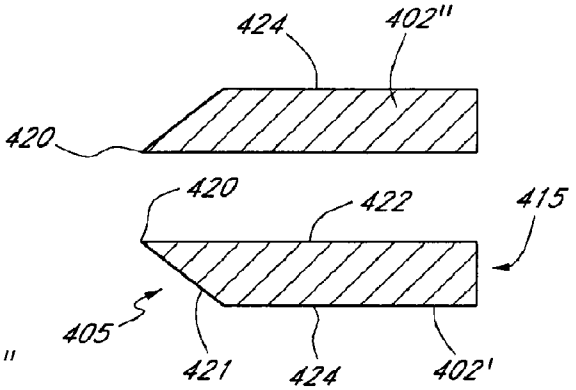

FIG. 16F

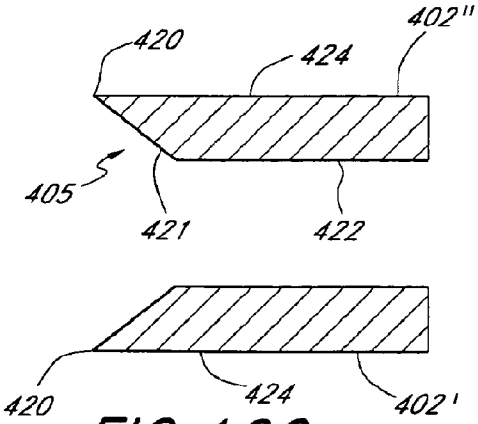

FIG. 16G

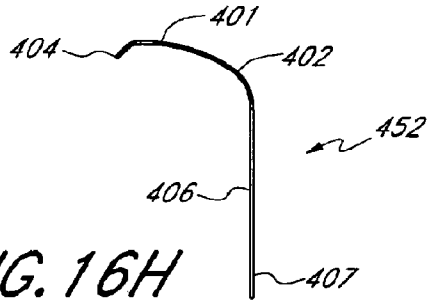

FIG. 16H

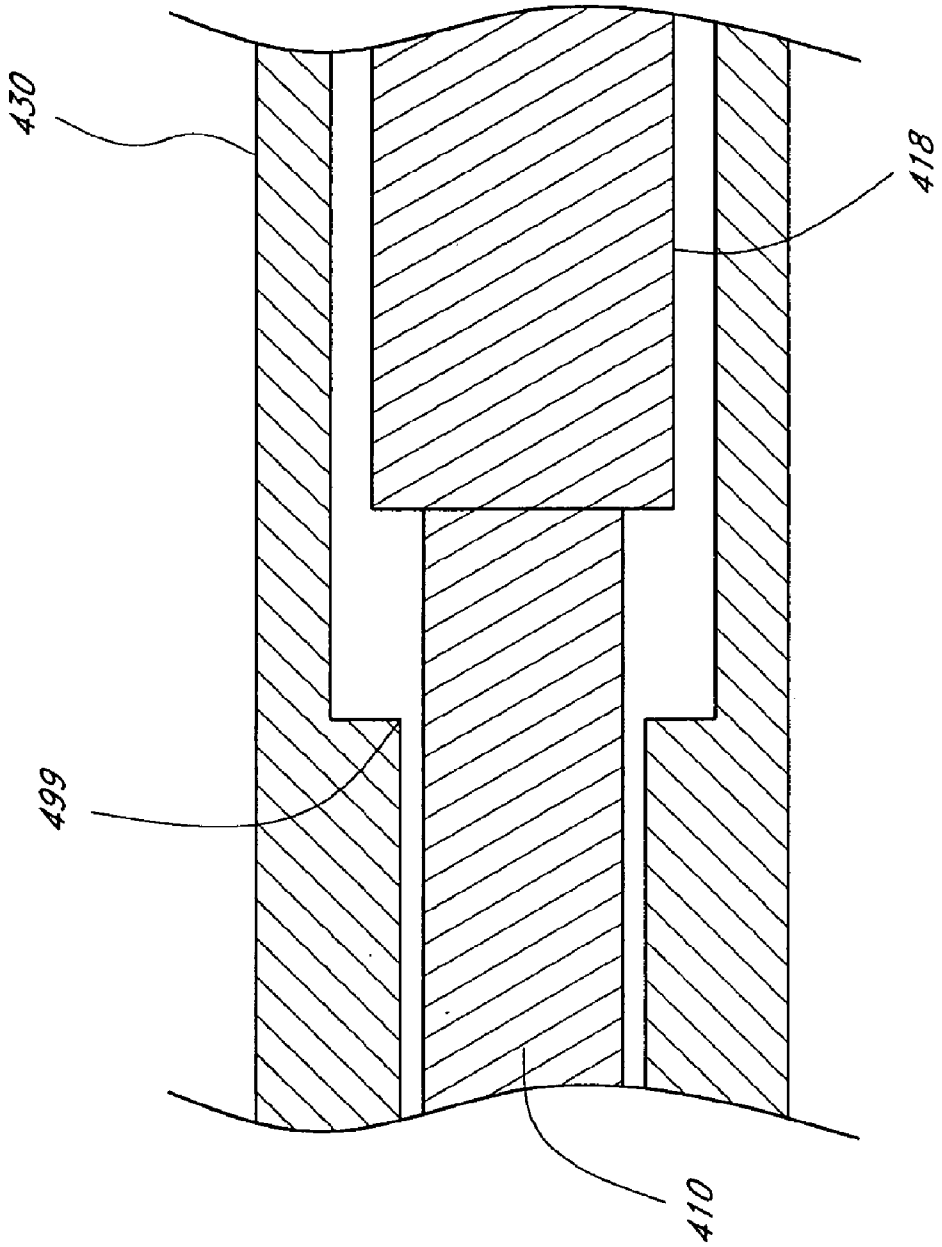

FIG. 16I

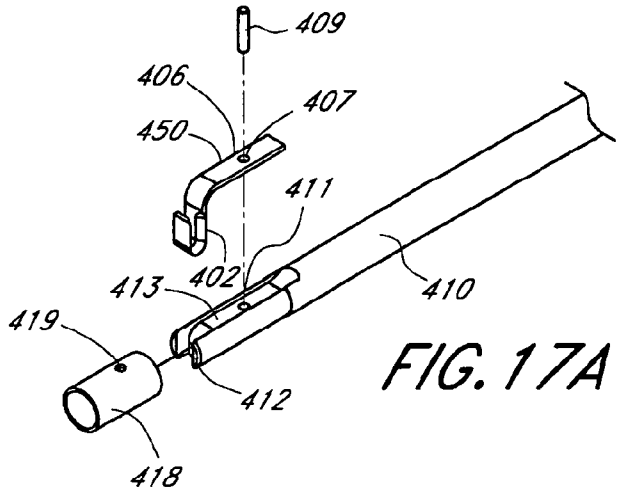

FIG. 17A

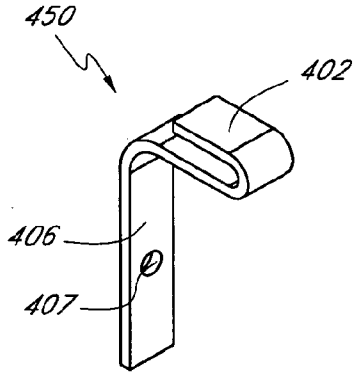

FIG. 17B

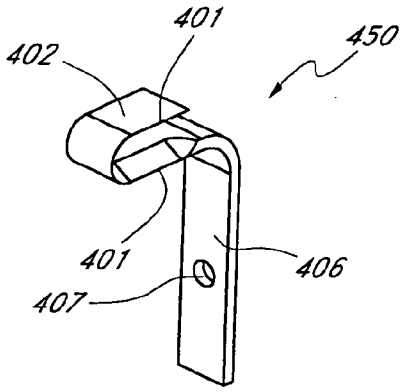

FIG. 17C

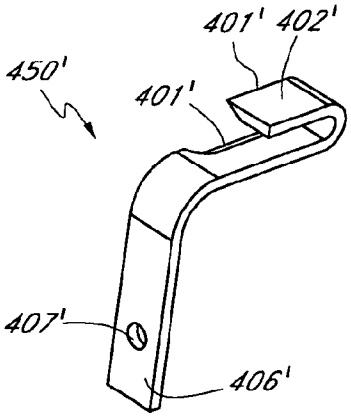

FIG. 17D

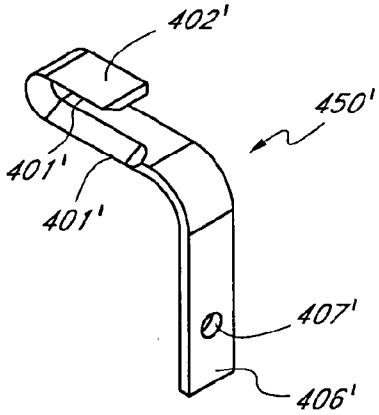

FIG. 17E

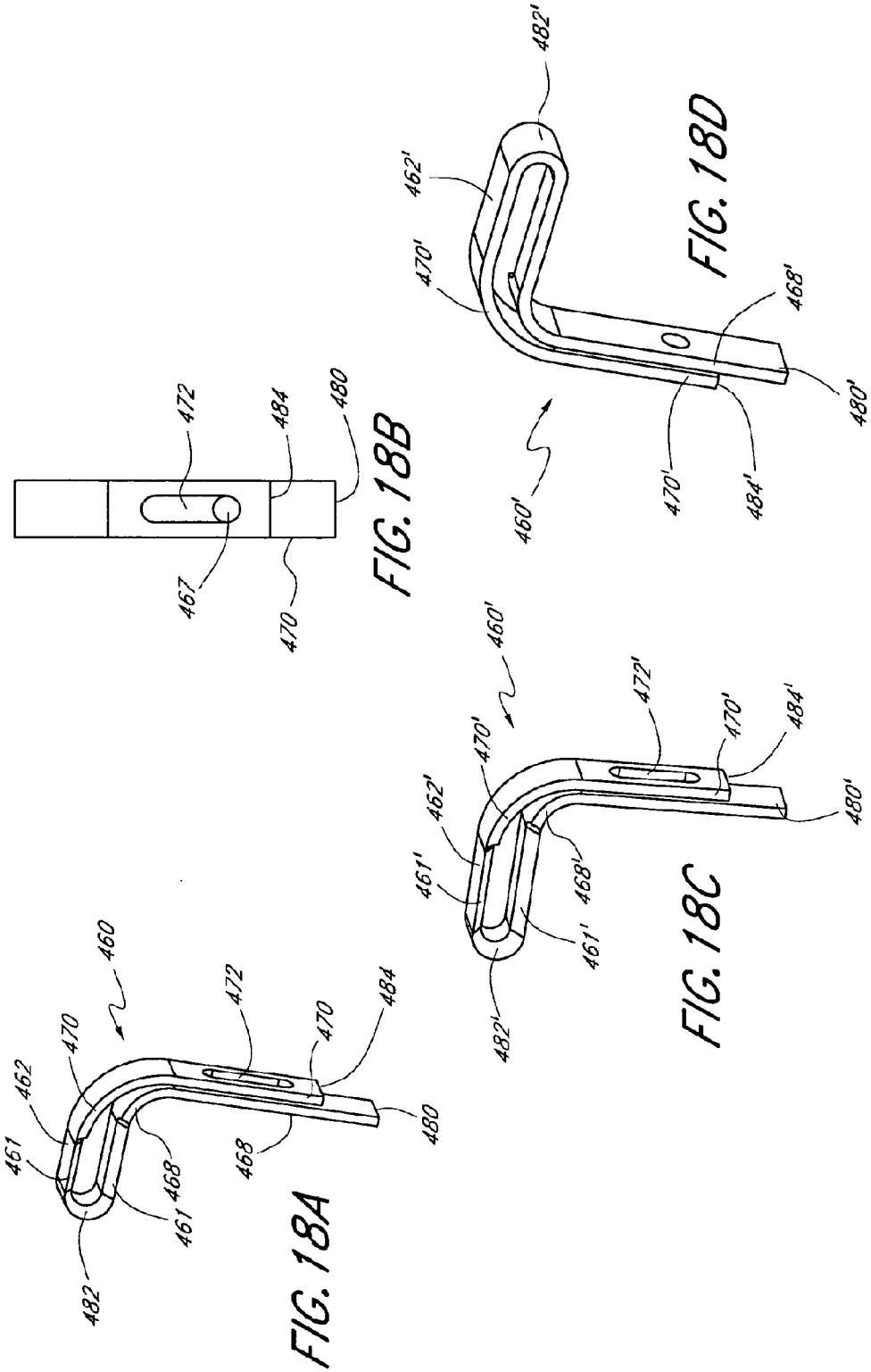

FIG. 18A

FIG. 18B

FIG. 18C

FIG. 18D

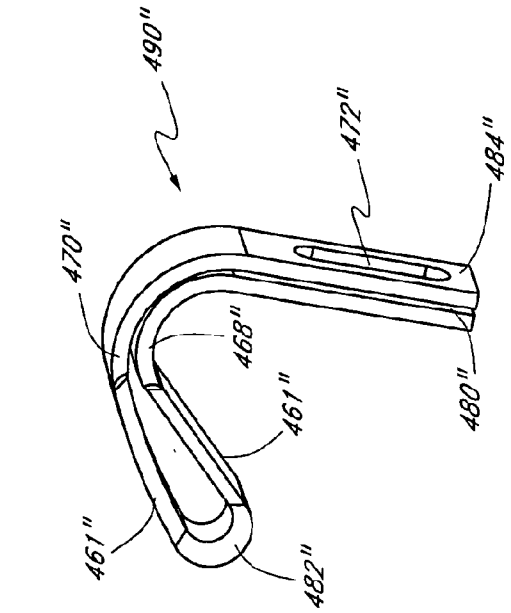

FIG. 18G

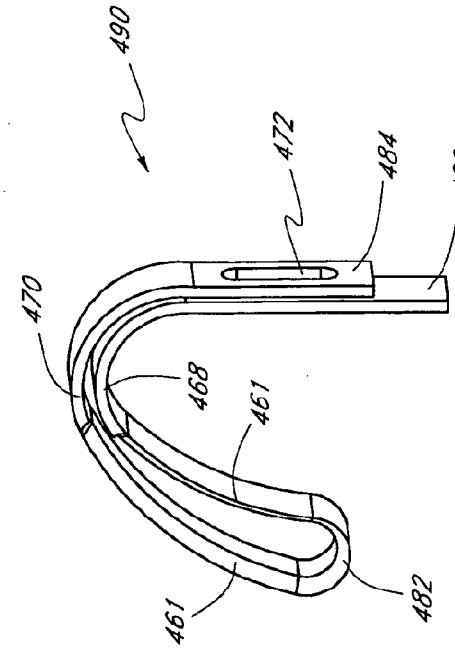

FIG. 18E

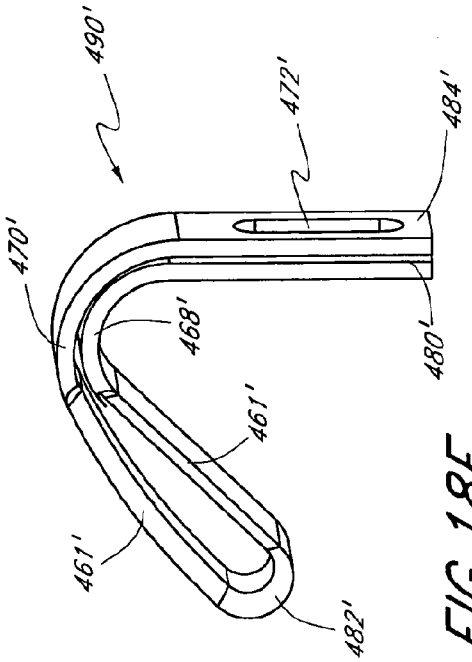

FIG. 18F

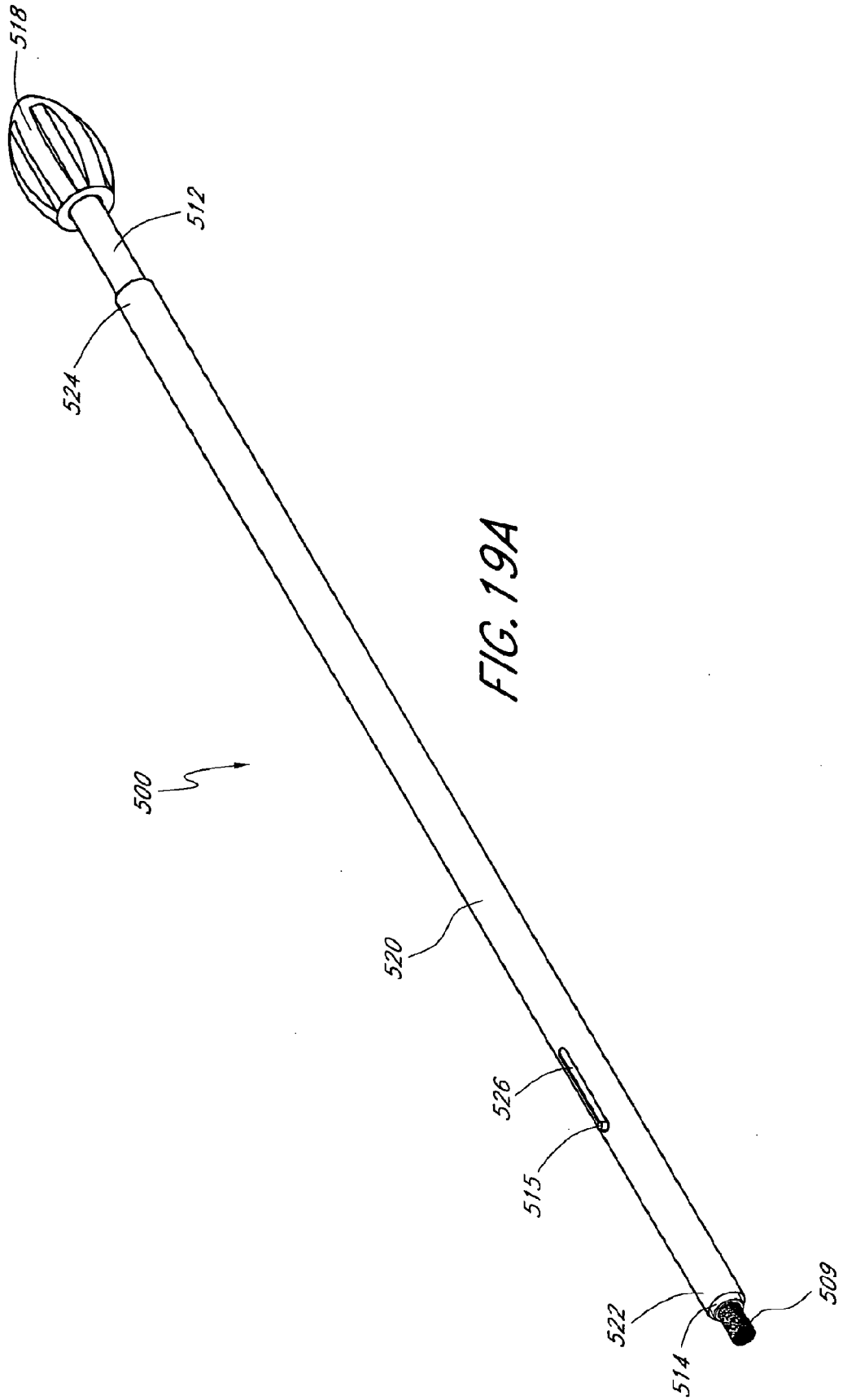

FIG. 19A

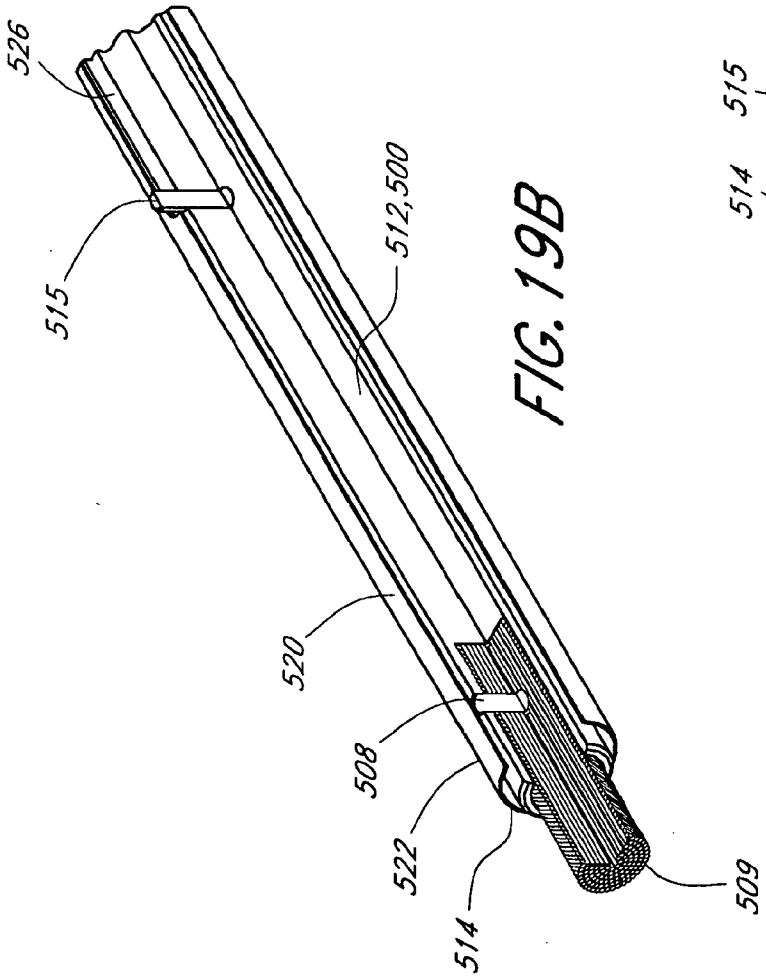

FIG. 19B

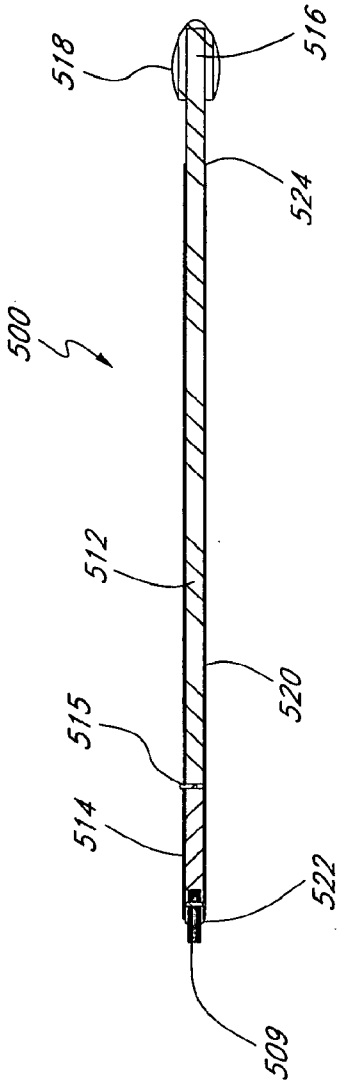

FIG. 19C

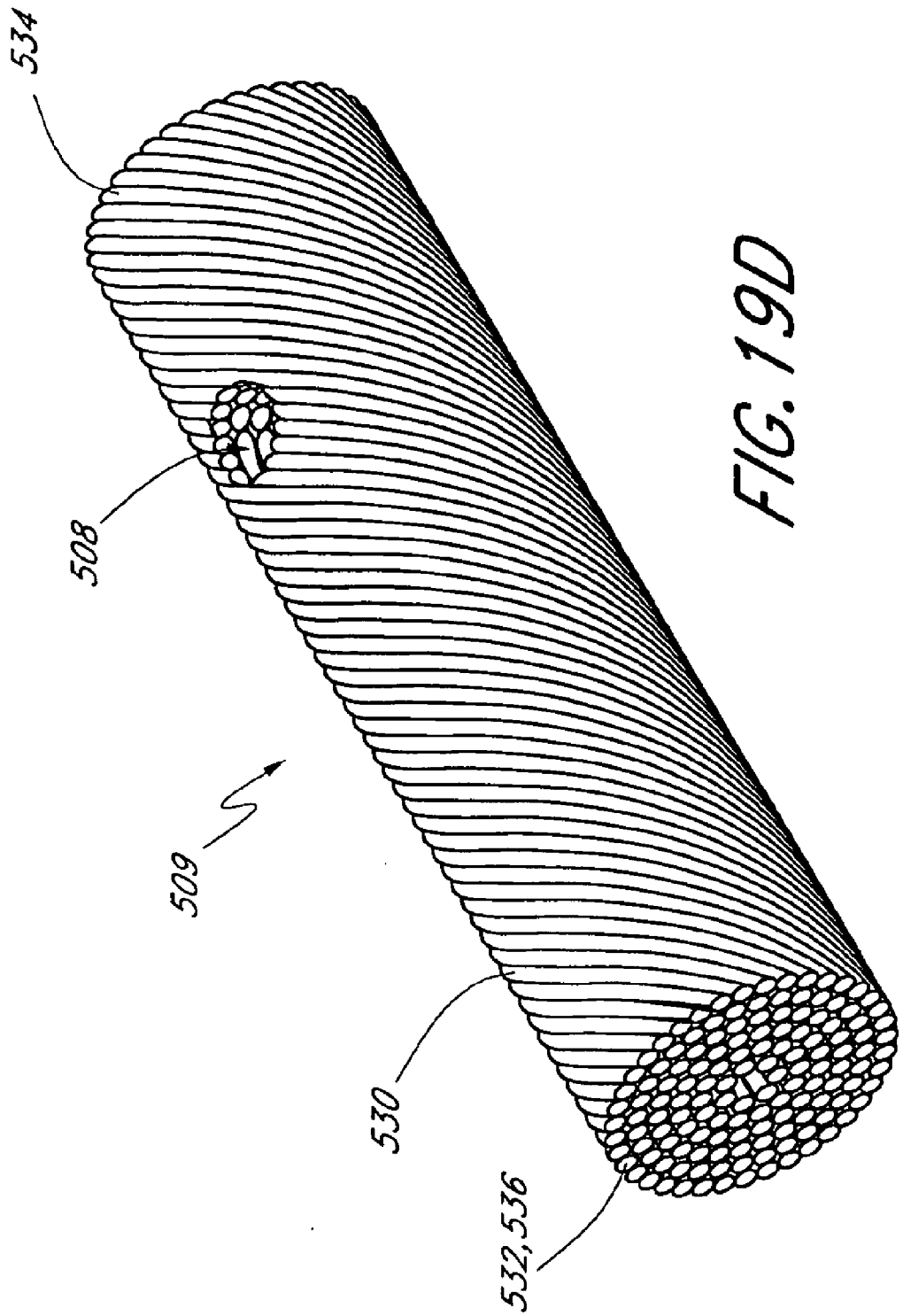

FIG. 19D

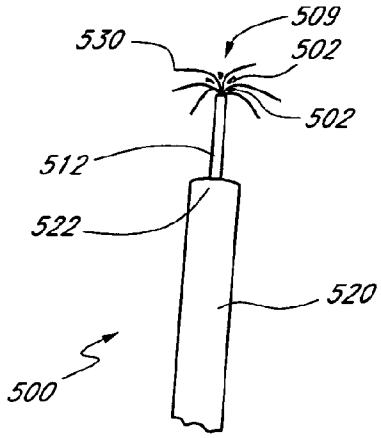

FIG.20

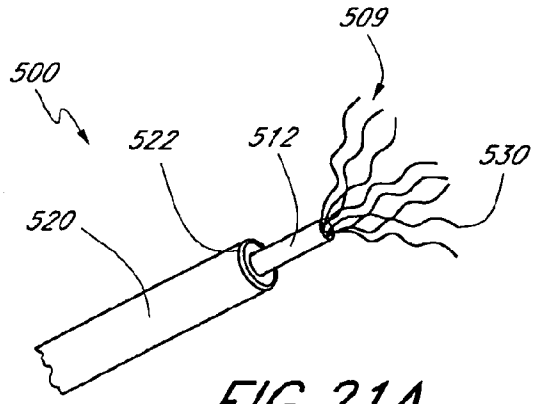

FIG.21A

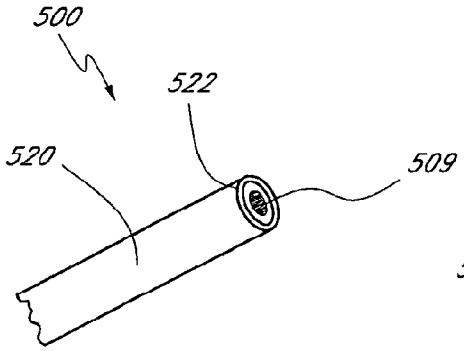

FIG.21B

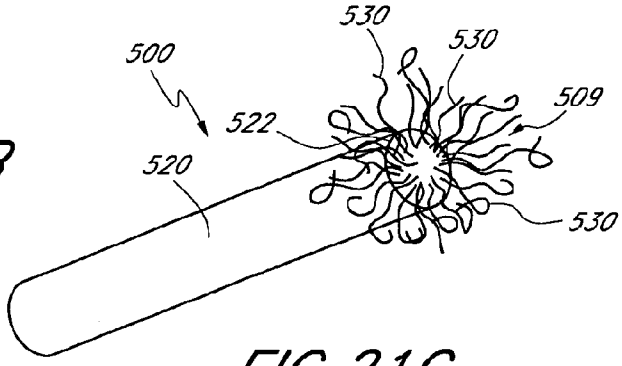

FIG.21C

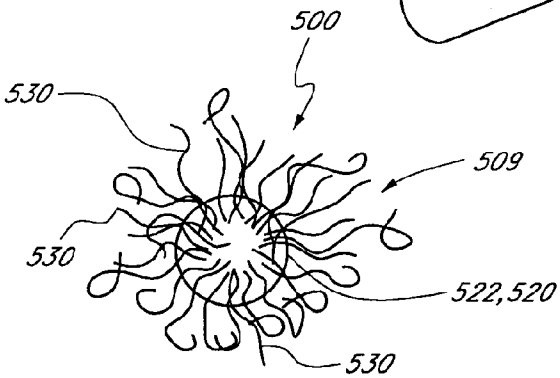

FIG.21D

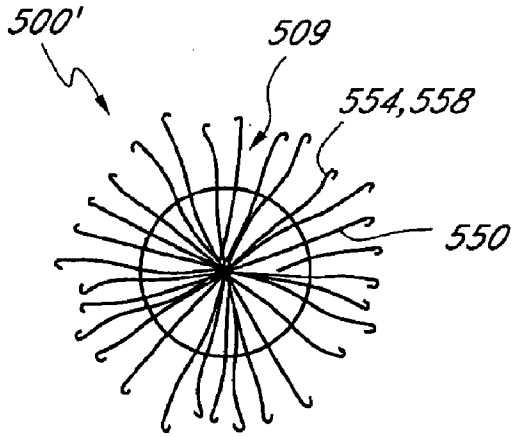

FIG. 22A

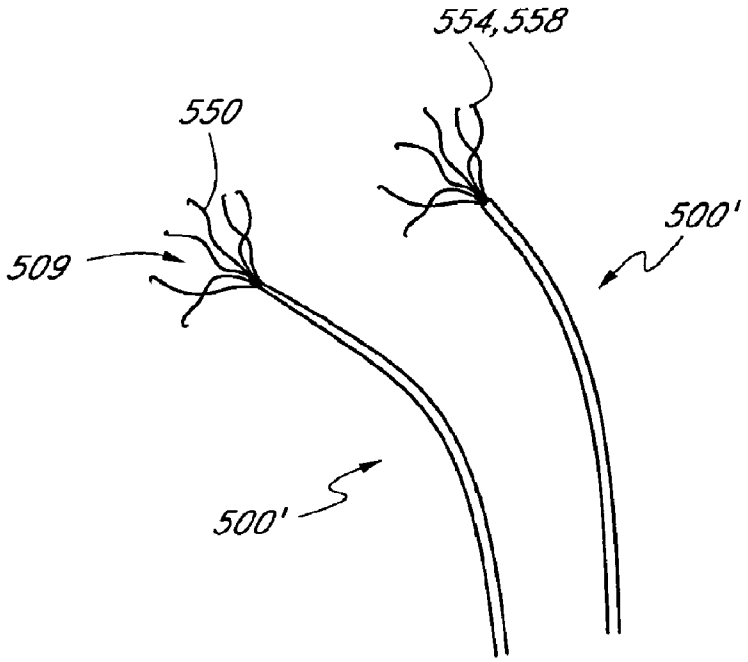

FIG. 22B

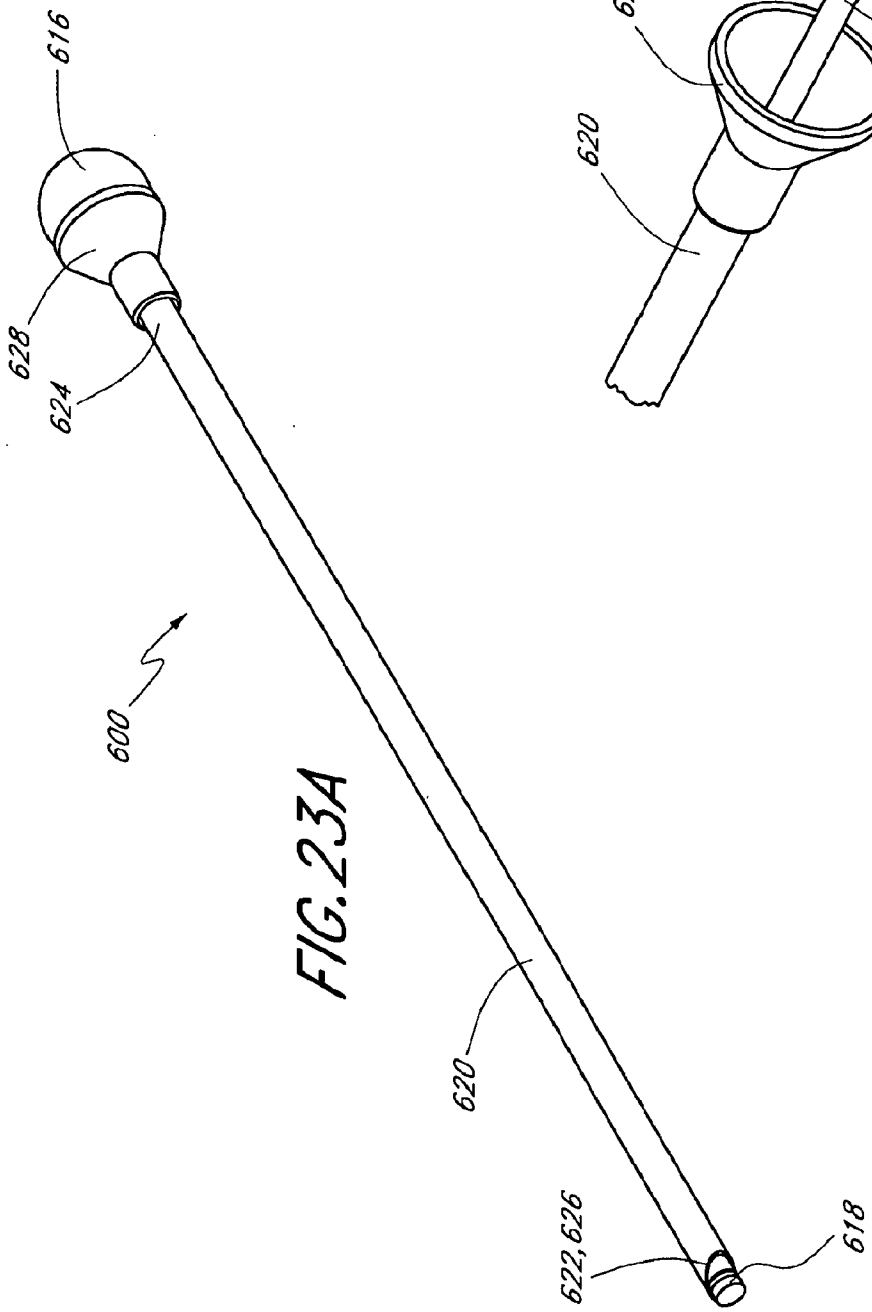

FIG. 23A

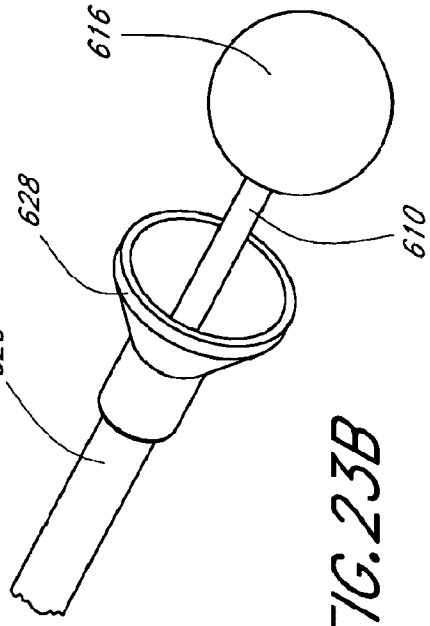

FIG. 23B

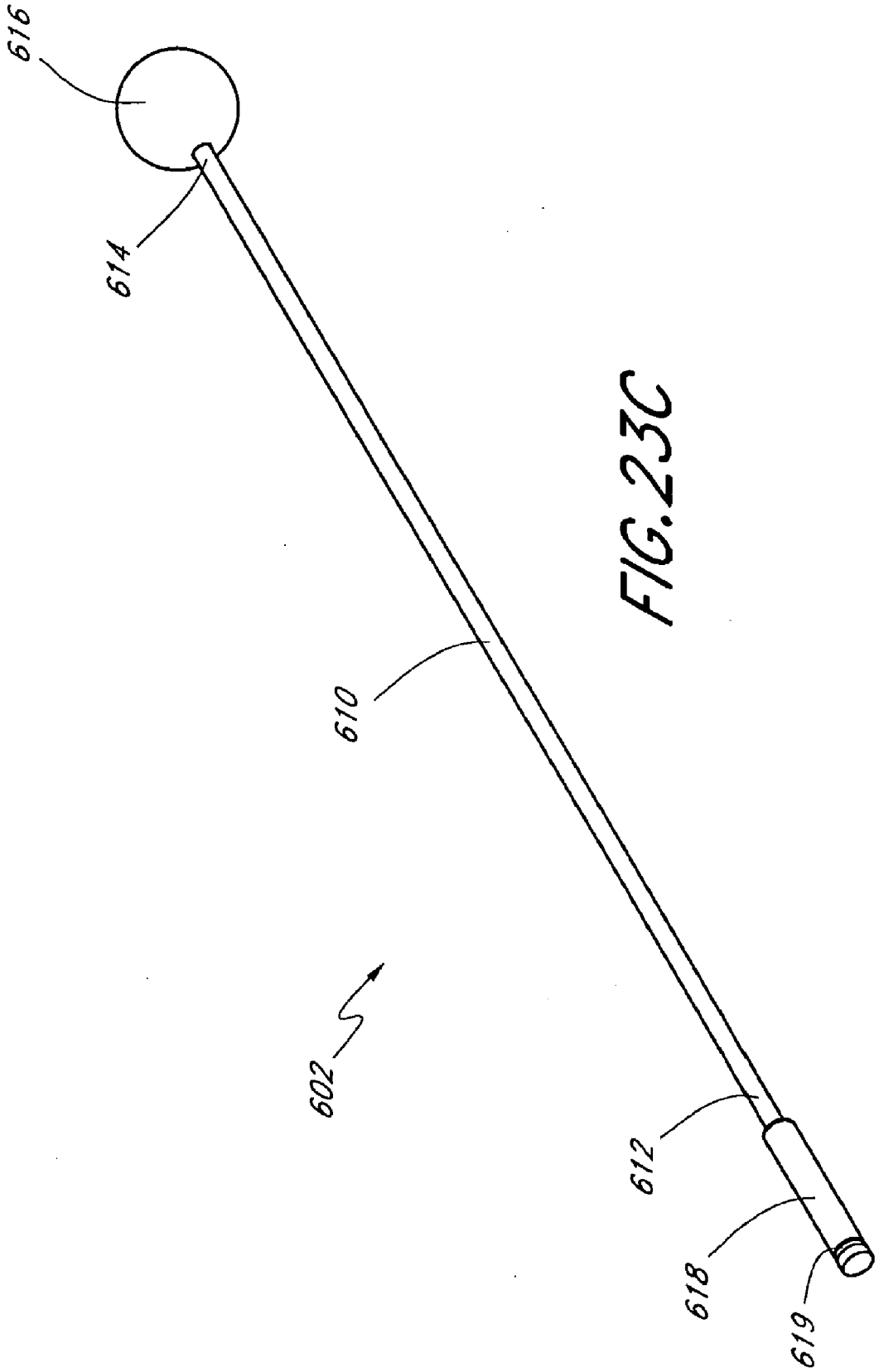

FIG. 23C

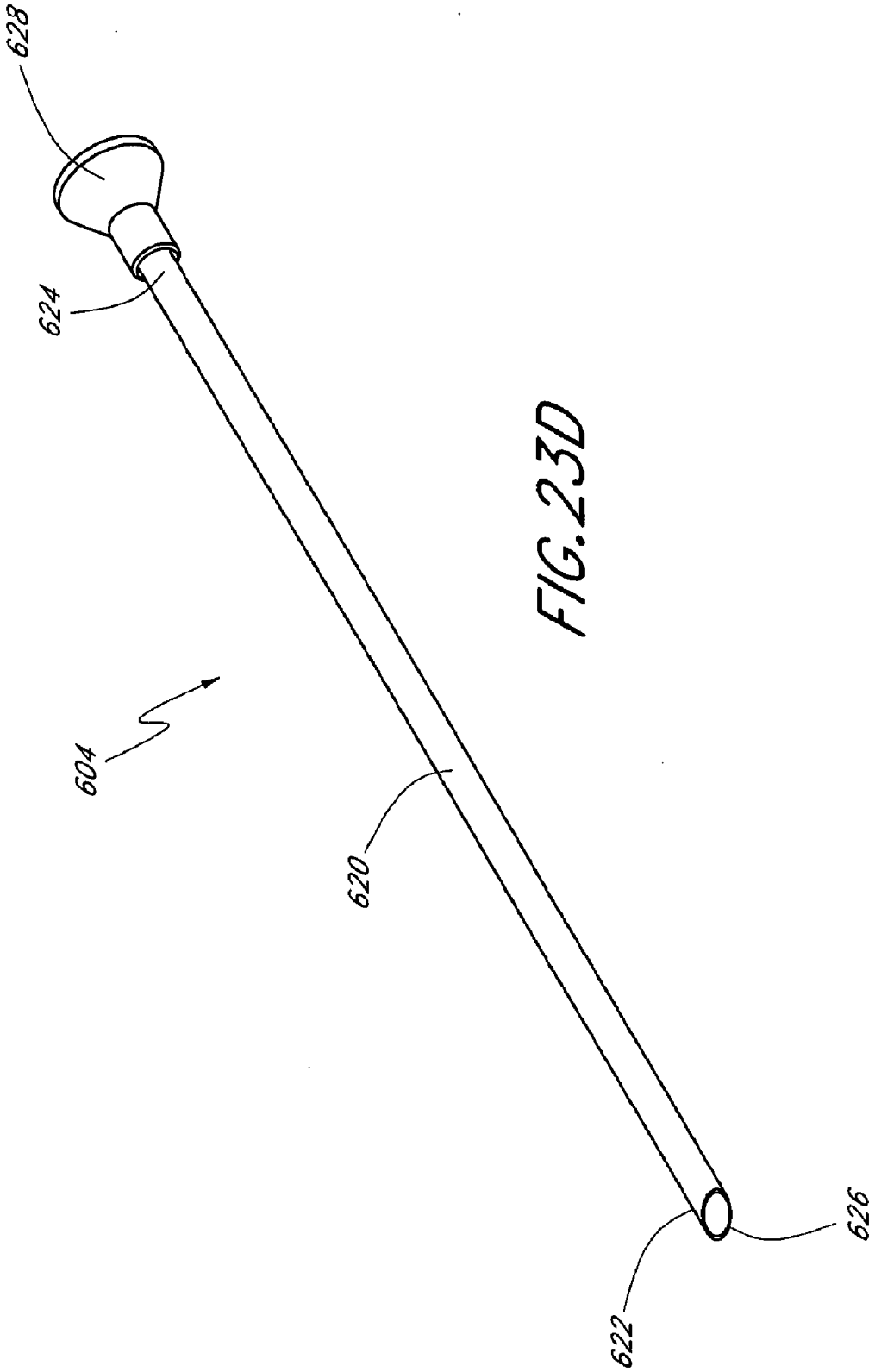

FIG. 23D

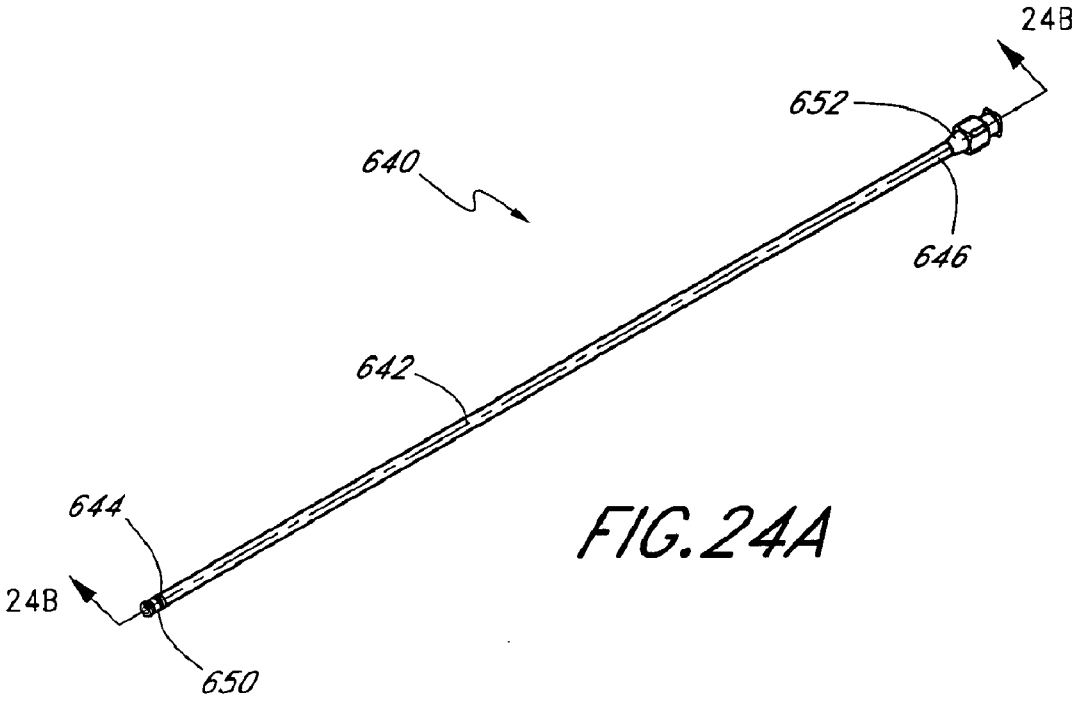

FIG. 24A

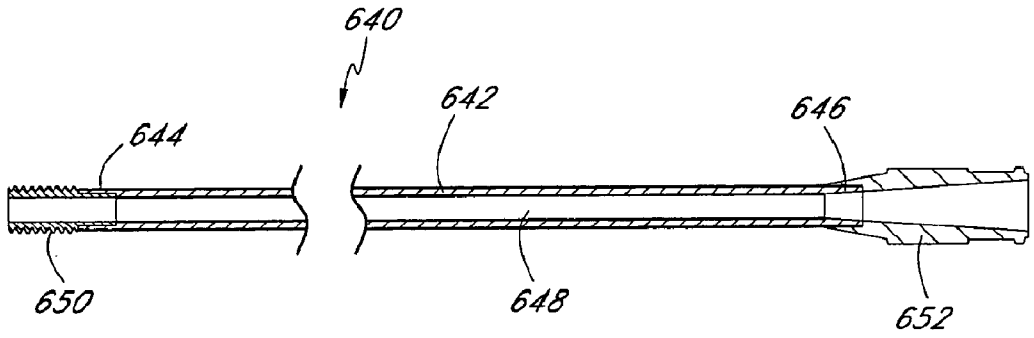

FIG. 24B

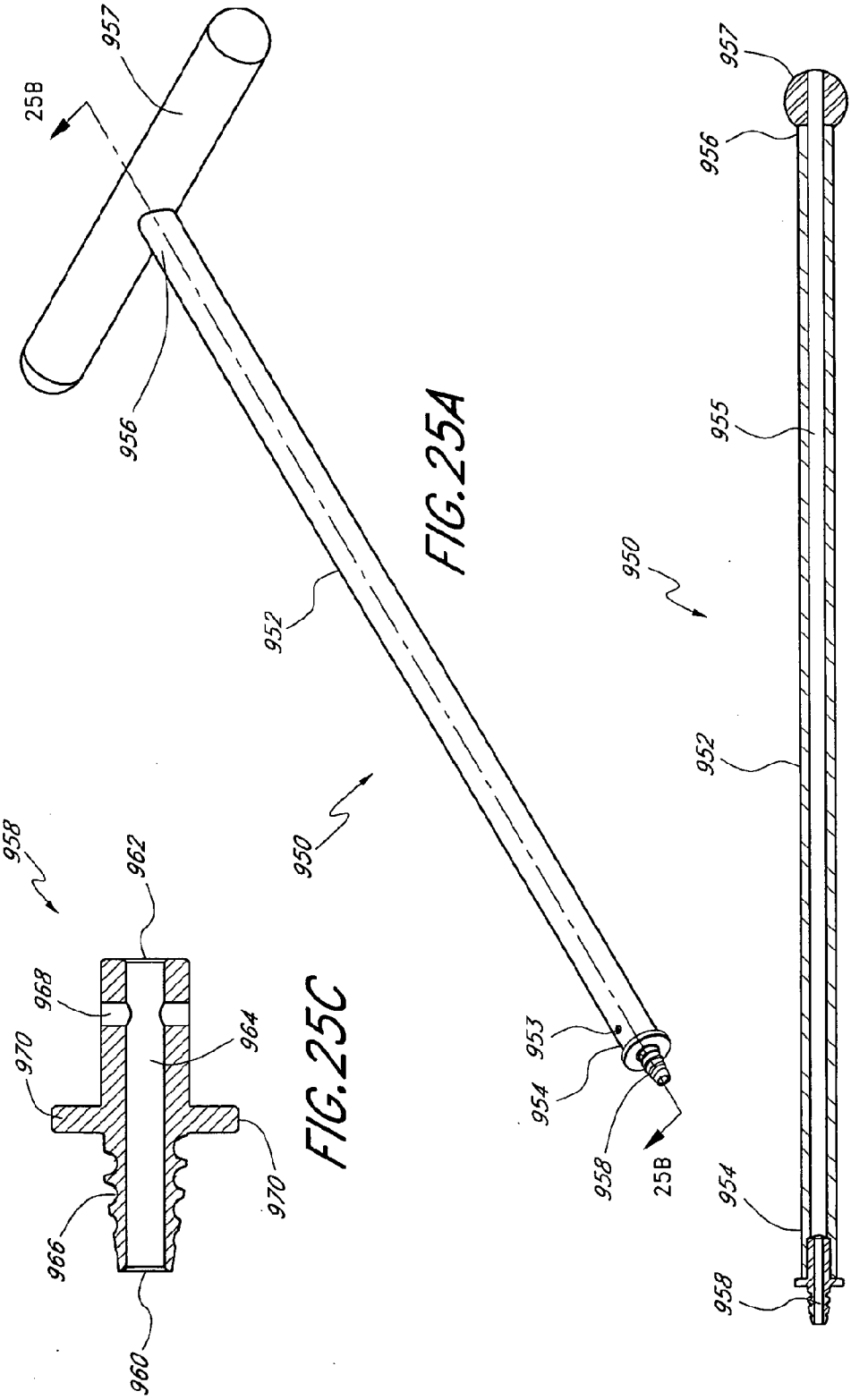

FIG. 25A

FIG. 25B

FIG. 25C

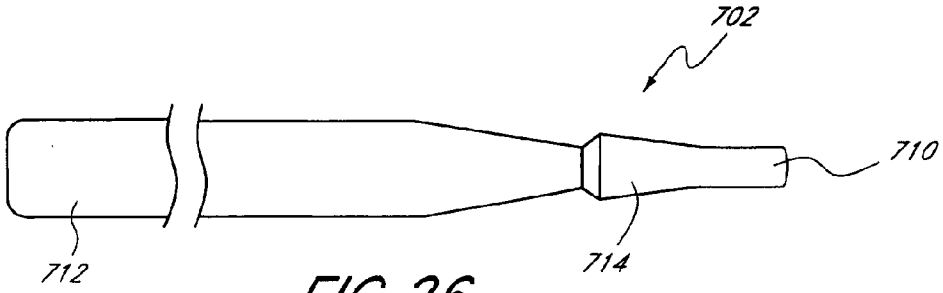

FIG.26

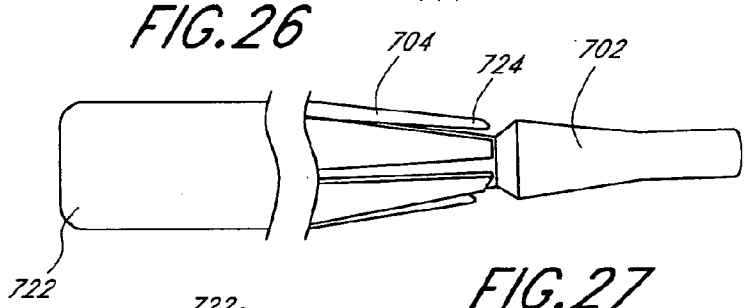

FIG.27

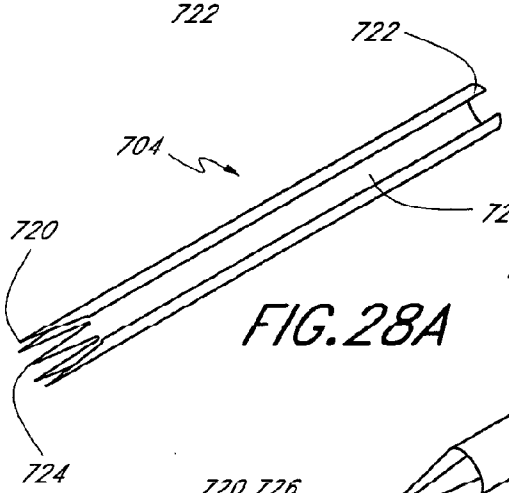

FIG.28A

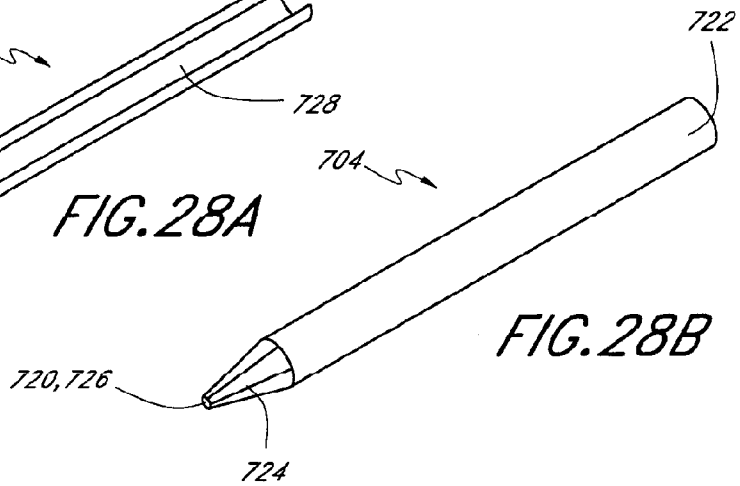

FIG.28B

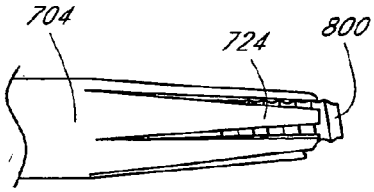

FIG.29A

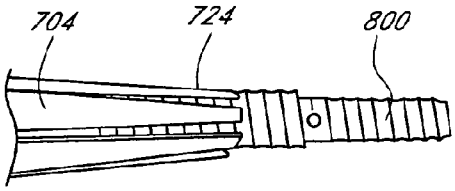

FIG.29B

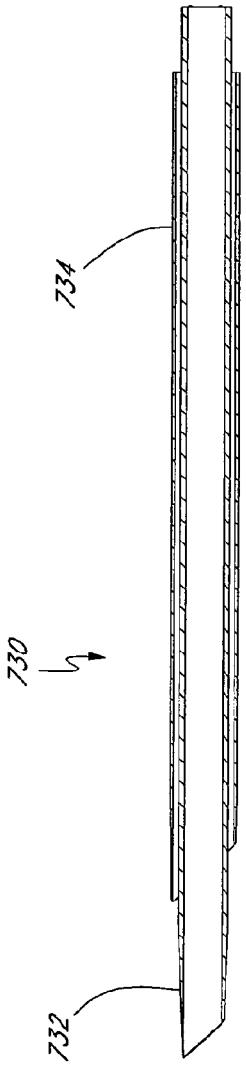

FIG. 30A

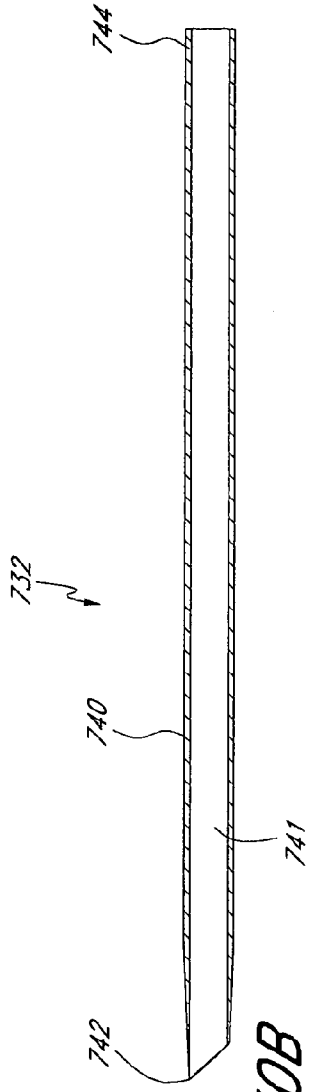

FIG. 30B

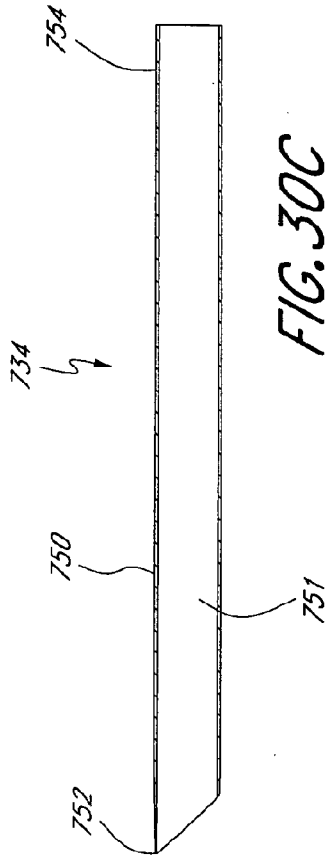

FIG. 30C

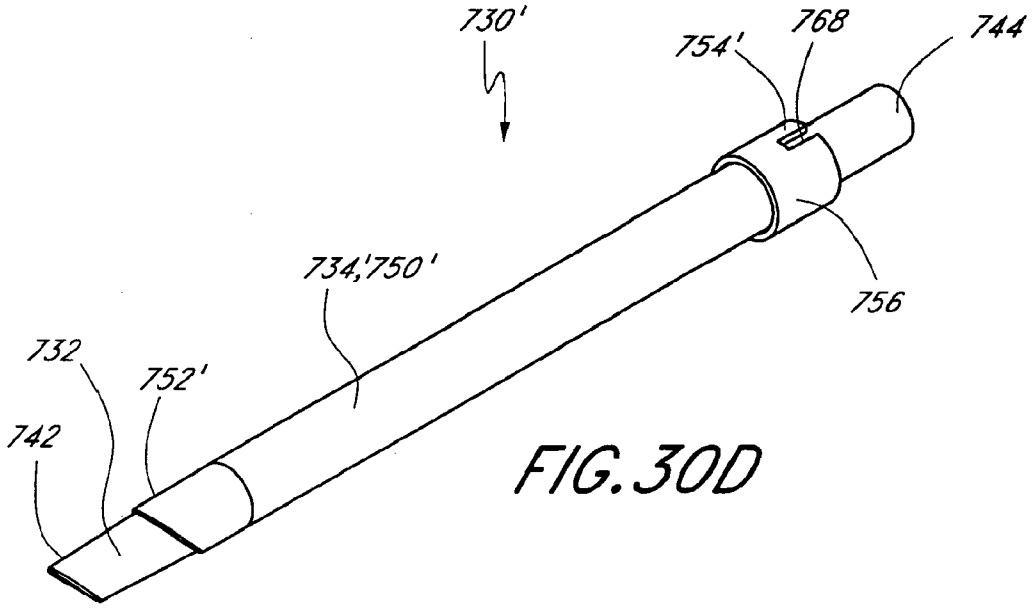

FIG. 30D

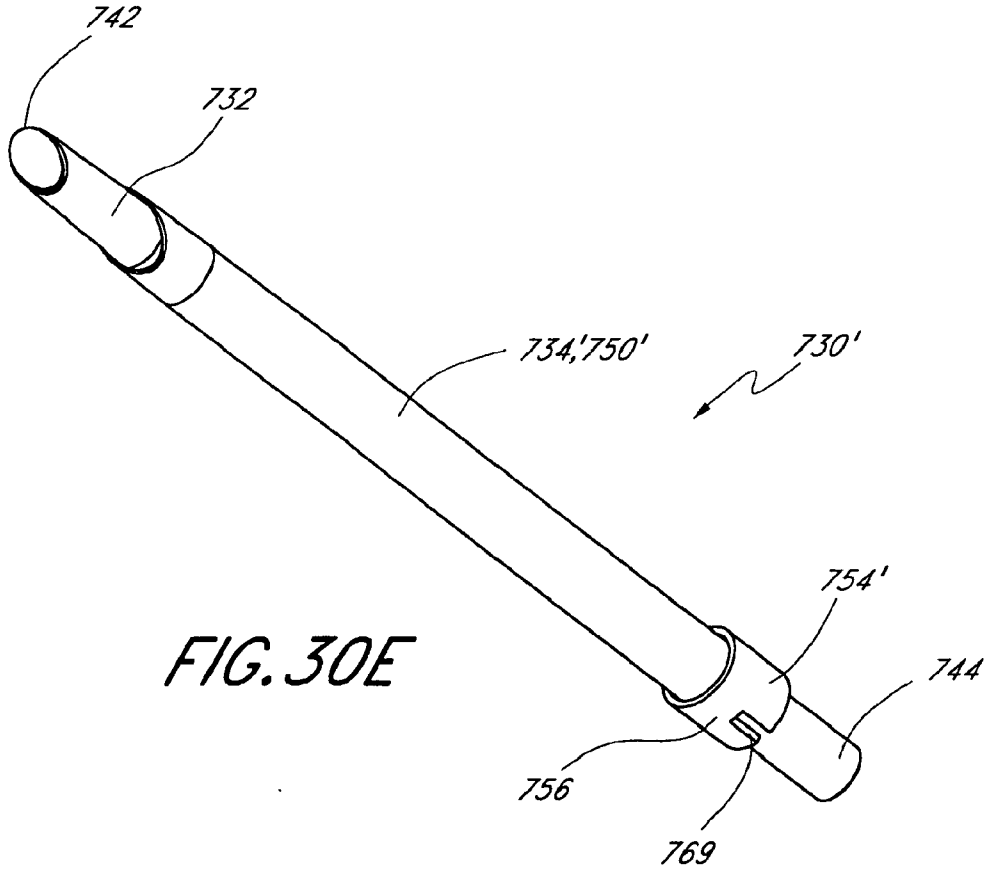

FIG. 30E

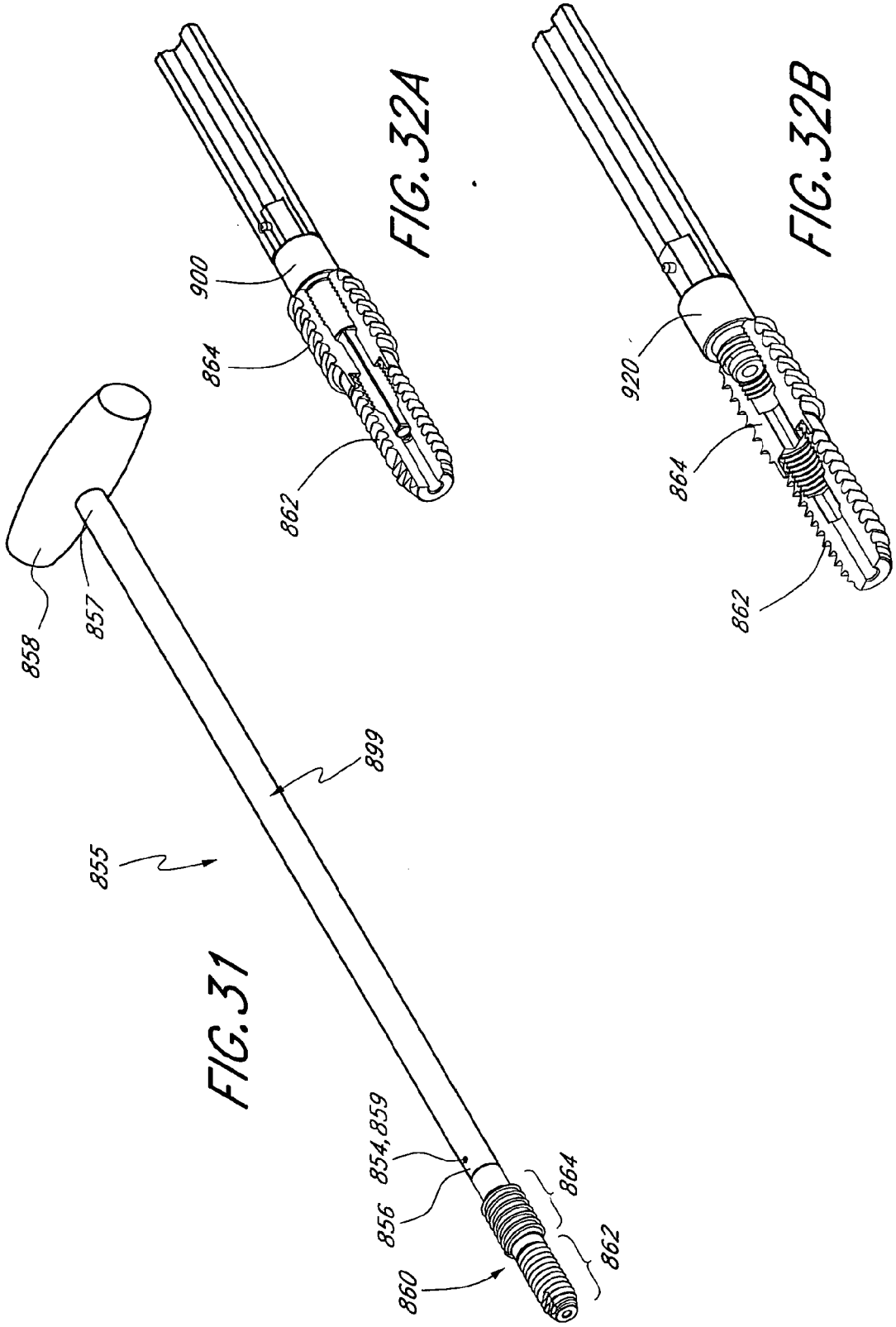

FIG. 32A

FIG. 32B

FIG. 31

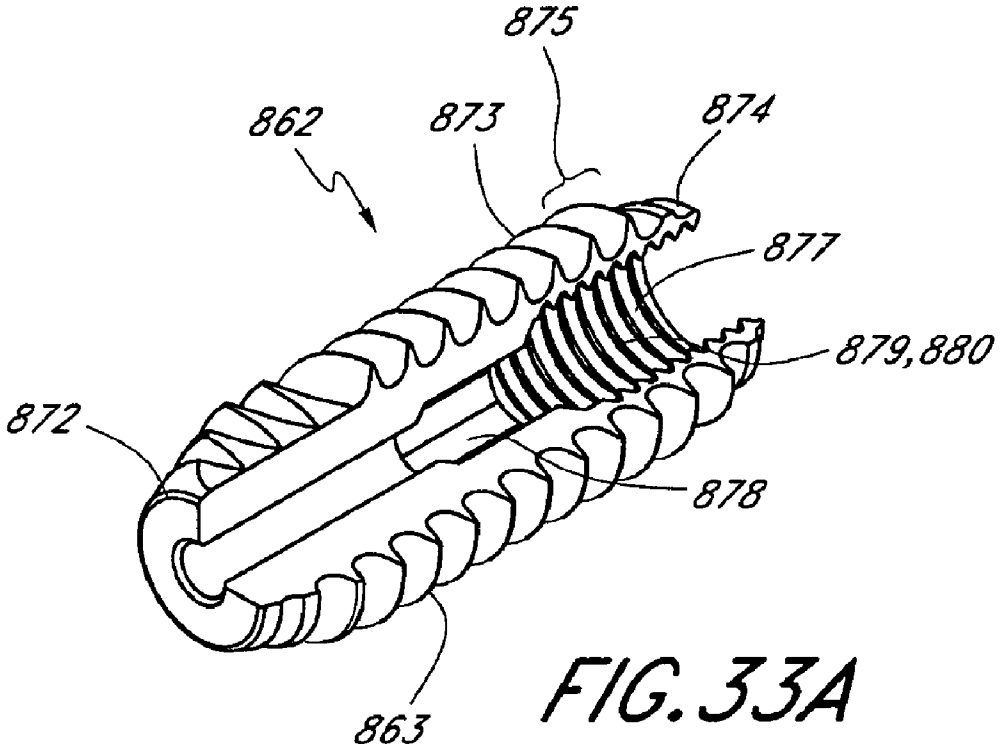

FIG. 33A

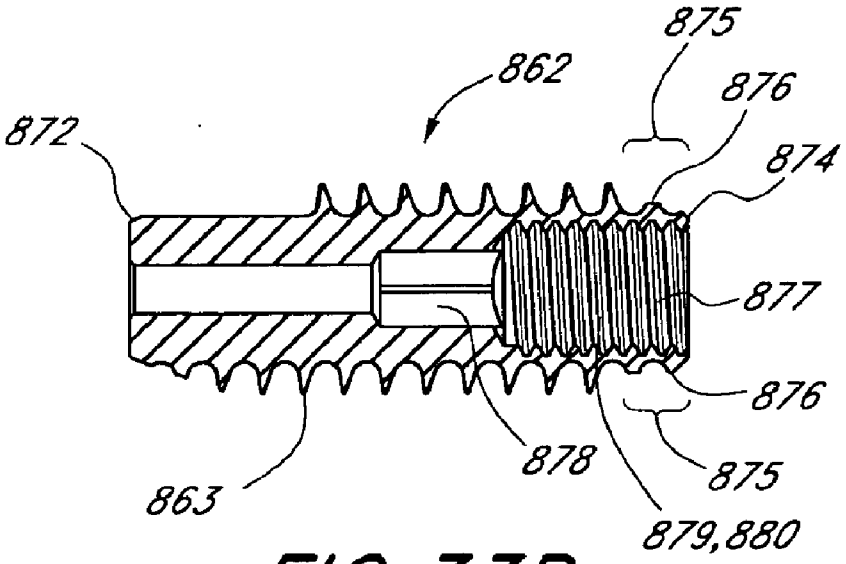

FIG. 33B

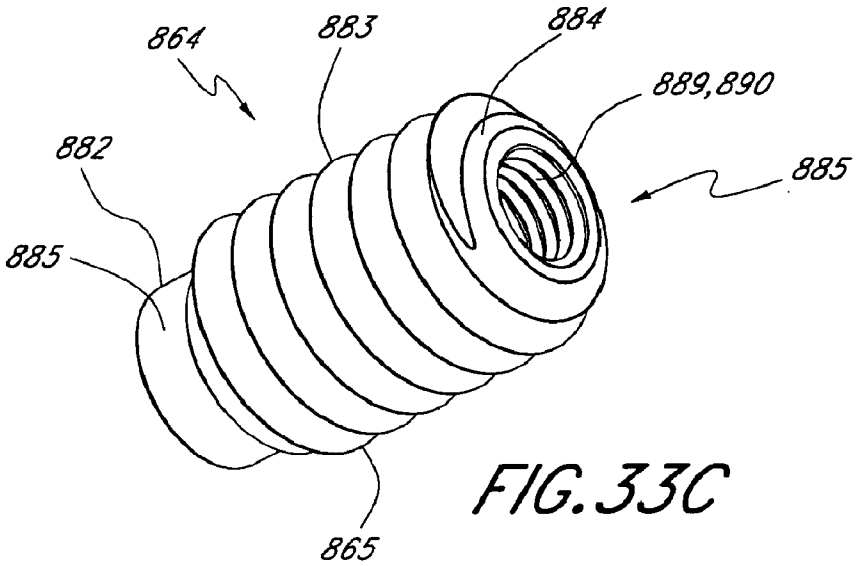

FIG. 33C

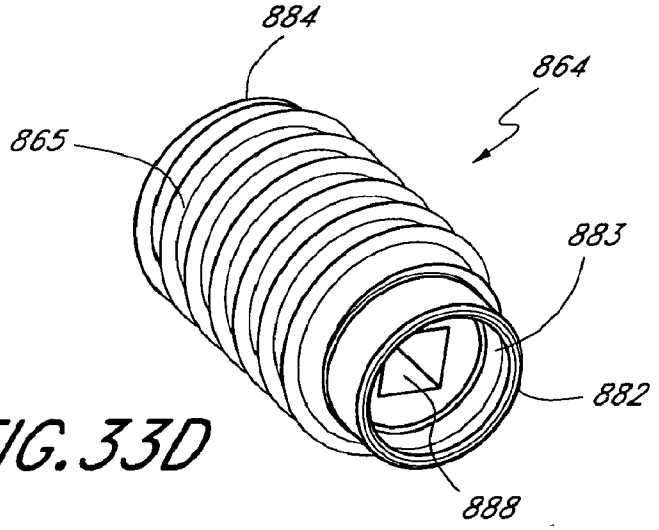

FIG. 33D

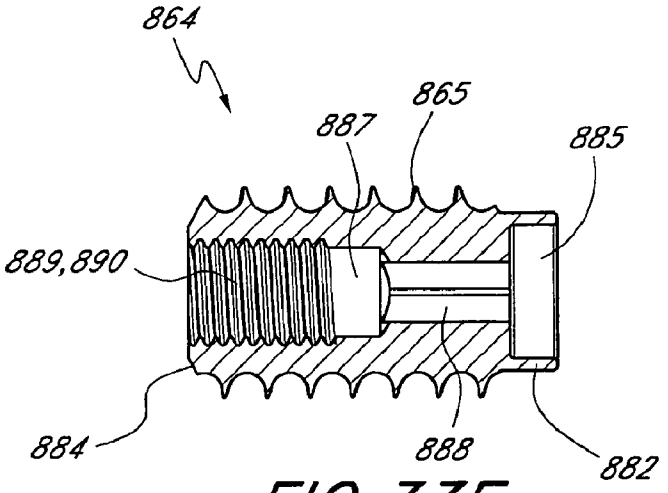

FIG. 33E

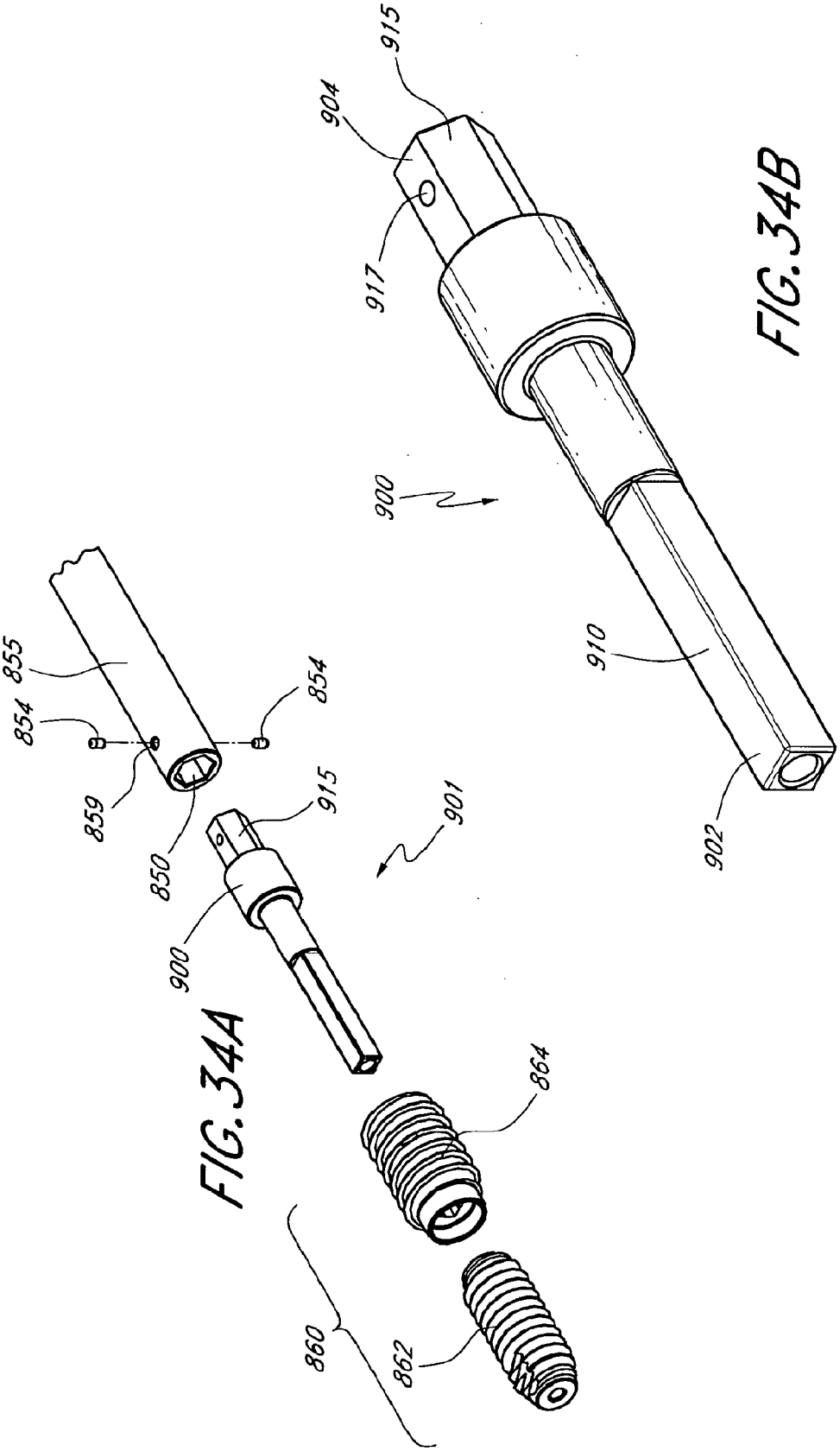

FIG. 34A

FIG. 34B

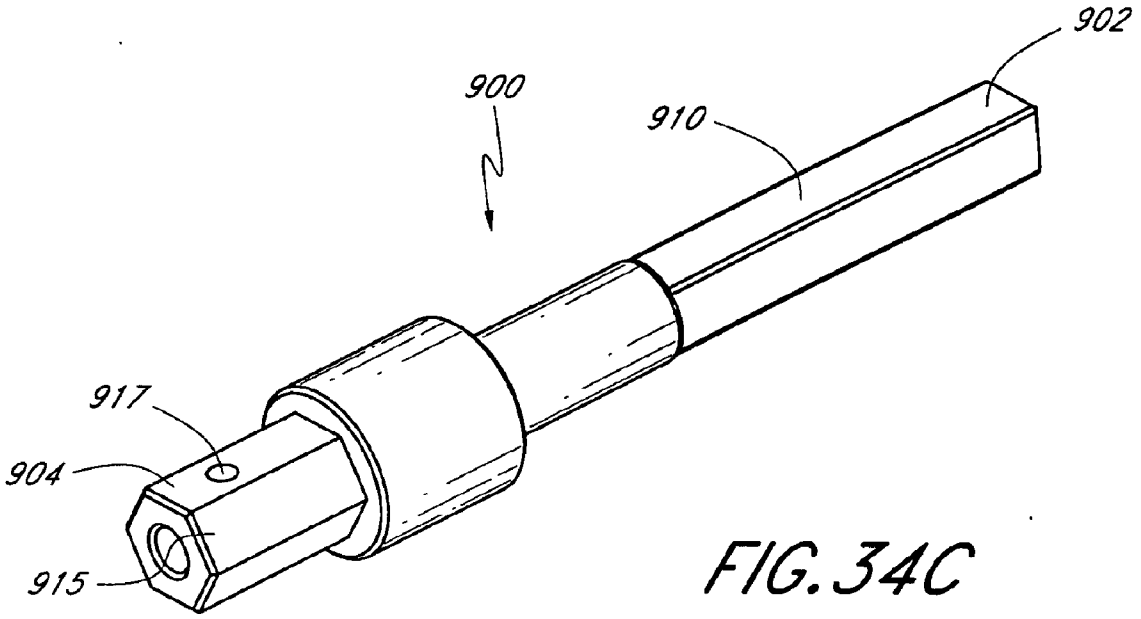

FIG. 34C

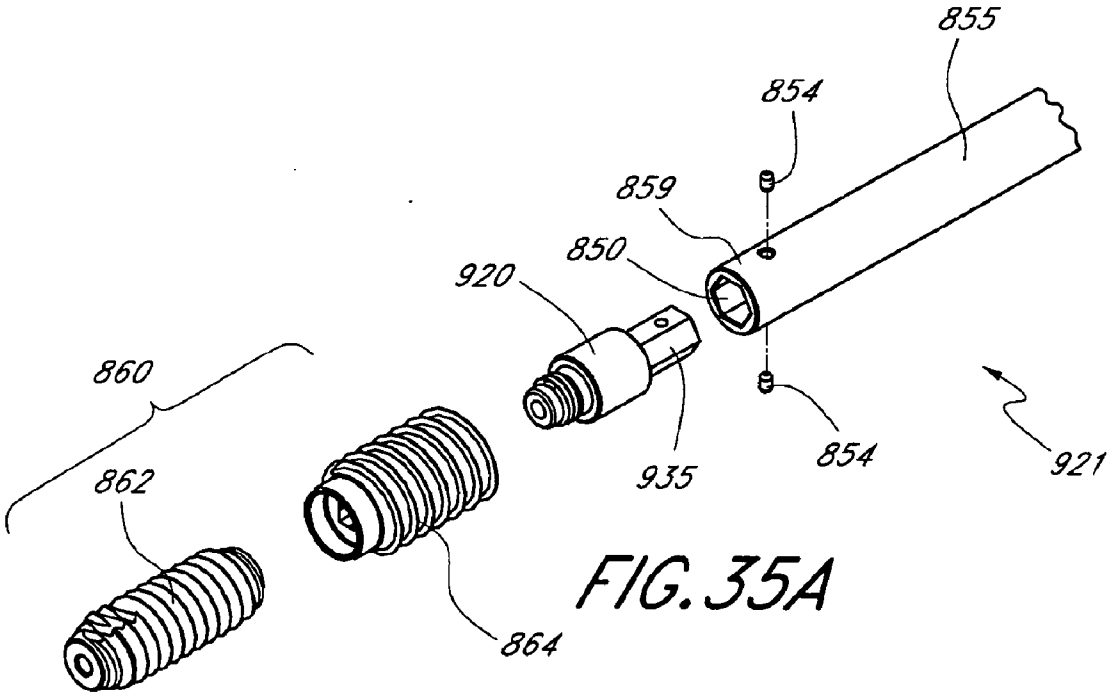

FIG. 35A

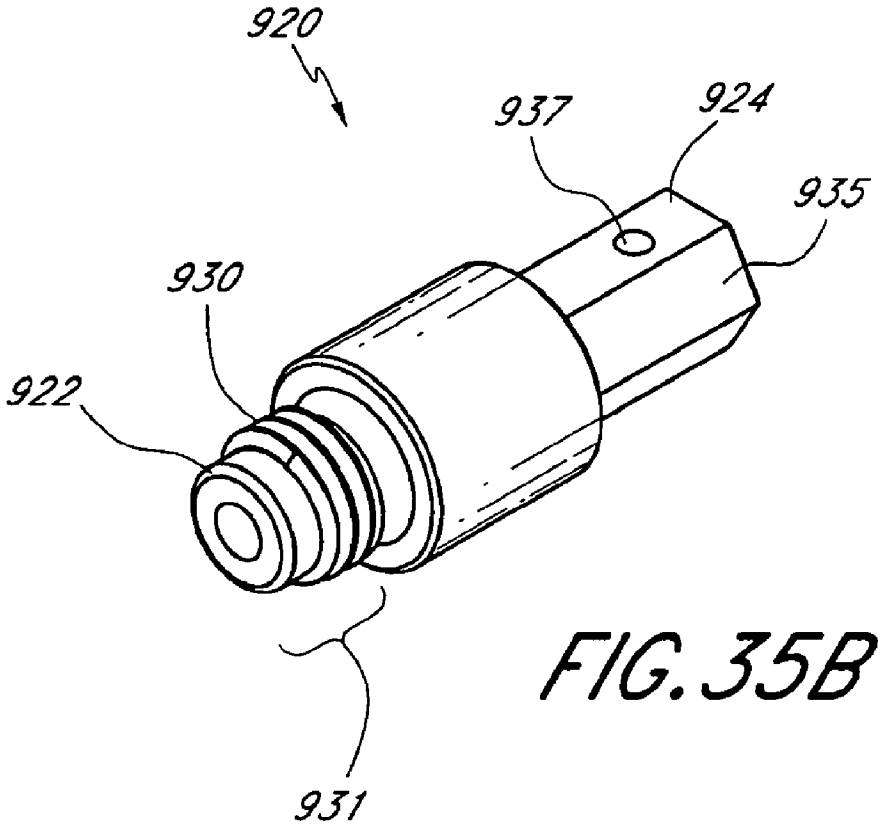

FIG. 35B

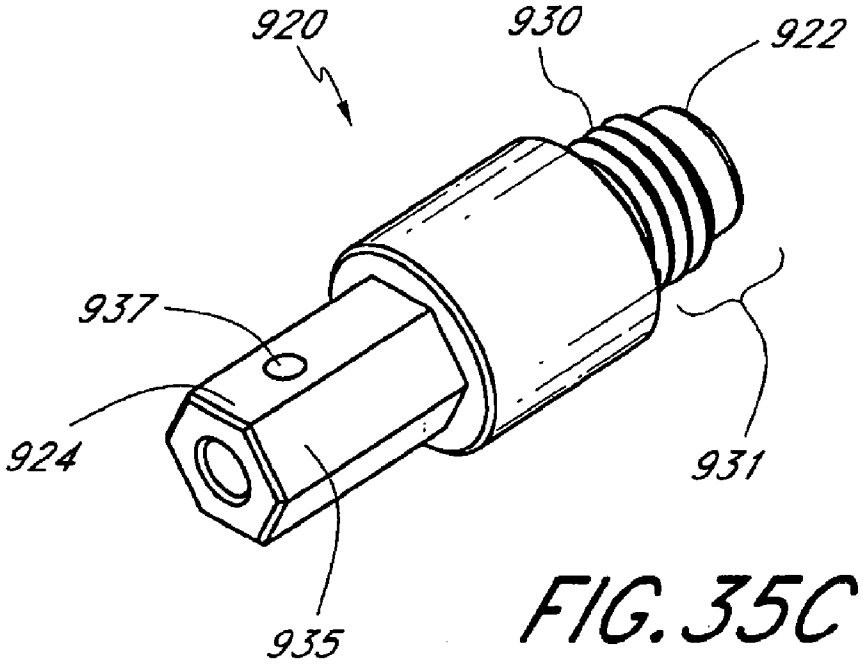

FIG. 35C

ACCESS ASSEMBLY FOR GUIDING INSTRUMENTATION THROUGH SOFT TISSUE TO A POINT ON THE SPINE

RELATED APPLICATIONS

[0001] This is a divisional application of U.S. patent application Ser. No. 10/971,779, filed Oct. 22, 2004, which claims priority benefit under 35 U.S.C. § 119(e) of Provisional Application 60/513,899, filed Oct. 23, 2003, the entire contents of each of the aforementioned U.S. patent applications are hereby incorporated by reference into this application.

BACKGROUND OF THE INVENTION

[0002] 1. Field of the Invention

[0003] The present invention relates generally to instrumentation systems and methods for accessing and preparing treatment sites within the spine (e.g., inter-vertebral motion segments) for subsequent therapeutic procedures, such as, for example, spinal arthroplasty, partial or total disc replacement, annulus repair, vertebroplasty, arthrodesis (fusion), or the like. Disclosed herein are various tools and methods of use (e.g., surgical cutting devices, tissue extractors, etc.) for performing any number of minimally-invasive treatment procedures (e.g., low trauma disc nucleectomy via transsacral axial access). The methods can involve, among other things, facilitating the removal of resulting tissue fragments, preparing an intervertebral disc space for subsequent deployment of spinal fusion designed to relieve lower back pain, or motion preservation devices, e.g., dynamic stabilization, devices, prosthetic nucleus devices and total disc replacements designed to relieve lower back pain and to restore physiological function of the lumbar spine, maintain and possibly improve disc health and prevent progression or transition of disease.

[0004] 2. Description of the Related Art

[0005] Chronic lower back pain is a primary cause of lost work days in the United States, and as such is a significant factor affecting both workforce productivity and health care expense. Therapeutic procedures for alleviating back pain range from conservative methods, e.g., with intermittent heat, rest, rehabilitative exercises, and medications to relieve pain, muscle spasm, and inflammation, to progressively more active and invasive surgical means which may be indicated if these treatments are unsuccessful, including various spinal arthroplasties, and eventually even spinal arthrodesis, i.e., surgical fusion.

[0006] There are currently over 700,000 surgical procedures performed annually to treat lower back pain in the U.S. In 2004, it is conservatively estimated that there will be more than 200,000 lumbar fusions performed in the U.S., and more than 300,000 worldwide, representing approximately a $1B endeavor in an attempt to alleviate patients' pain. In addition, statistics show that only about 70% of these procedures performed will be successful in achieving this end.

[0007] Moreover, there may be multiple causes for a patient's lower back pain, where the pain generators are hypothesized to comprise one or more of the following: bulging of the posterior annulus or PLL with subsequent nerve impingement; tears, fissures or cracks in the outer, innervated layers of the annulus; motion induced leakage of nuclear material through the annulus and subsequent irritation of surrounding tissue in response to the foreign body reaction, or facet pain. Generally it is believed that 75% of cases are associated with degenerative disc disease, where the intervertebral disc of the spine suffers reduced mechanical functionality due to dehydration of the nucleus pulposus.

[0008] The intervertebral discs, located anterior to the vertebral canal, are formed of fibrous cartilage, and comprise the posterior and anterior longitudinal ligaments and the annulus fibrosis, circumferentially enclosing a central mass, the. The nucleus pulposus provides for cushioning and dampening of compressive forces to the spinal column. In a healthy adult spine, it comprises 80% water.

[0009] Surgical procedures, such as spinal fusion and discectomy, may alleviate pain, but do not restore normal physiological disc function.

[0010] With reference to FIGS. **1**A and **1**B, the vertebrae are the bony building blocks of the spine. Between each of the vertebral bodies are the spinal discs and this unit, comprising two vertebral bodies interfaced by an intermediate spinal disc, is known as a spinal motion segment. The spine has seven vertebrae in the neck (cervical vertebrae), twelve vertebrae in the mid-back (thoracic vertebrae), and five vertebrae in the low back (lumbar vertebrae). All of the vertebrae and discs are held together or surrounded by means of ligaments, which are strong fibrous soft tissues that firmly attach bones to bones. Ligaments contribute to the normal physiologic range of motion of the spine, and if injured, e.g., due to disc degeneration (described below) and ensuing impact on distribution of physiologic loads, they similarly may contribute to the resulting pain.

[0011] Thus, the bony spine is designed so that vertebrae "stacked" together can provide a movable support structure while also protecting the spinal cord's nervous tissue that extends down the spinal column from the brain from injury. Each vertebra has a spinous process, which is a bony prominence behind the spinal cord that shields the cord's nerve tissue. The vertebrae also have a strong bony "body" in front of the spinal cord to provide a platform suitable for weight-bearing.

[0012] The spinal discs serve as "dampeners" between each vertebral body that minimize the impact of movement on the spinal column. Each disc is comprised of the nucleus pulposus, a central, softer component, contained with in the, a surrounding outer ring.

[0013] With age, the water and protein content of the body's cartilage changes resulting in thinner, more fragile cartilage. Hence, the spinal discs and the facet joints that stack the vertebrae, both of which are partly composed of cartilage, are subject to similar degradation over time. The gradual deterioration of the disc between the vertebrae is known as degenerative disc disease, or spondylosis. Spondylosis is depicted on x-ray tests or MRI scanning of the spine as a narrowing of the normal "disc space" between adjacent vertebrae.

[0014] Radiculopathy refers to nerve irritation caused by damage to the disc between the vertebrae. This occurs because of degeneration of the annulus fibrosis of the disc, or due to traumatic injury, or both. Weakening of the annulus may lead to disc bulging and herniation, i.e., the nucleus

pulposus or softer portion of the disc can rupture through the annulus and abut the spinal cord or its nerves as they exit the bony spinal column. When disc herniation occurs, the rupture of the nucleus pulposus the annulus fibrosis may irritate adjacent nervous tissue, causing local pain, or discogenic pain, in the affected area. Any level of the spine can be affected by disc degeneration. When disc degeneration affects the spine of the neck, it is referred to as cervical disc disease, while when the mid-back is affected, the condition is referred to as thoracic disc disease. Disc degeneration that affects the lumbar spine causes pain localized to the low back and is sometimes common in older persons and known as lumbago Degenerative arthritis (osteoarthritis) of the facet joints is also a cause of localized lumbar pain that can be diagnosed via x-ray analysis.

[0015] The pain from degenerative disc or joint disease of the spine may be treated conservatively with intermittent heat, rest, rehabilitative exercises, and medications to relieve pain, muscle spasm, and inflammation, but if these treatments are unsuccessful, progressively more active interventions may be indicated, including spinal arthroplasty including prosthetic nucleus device implantation; annulus repair, and total disc replacement, and eventually, even spinal arthrodesis, The intervention performed depends on the overall status of the spine, and the age and health of the patient. Procedures include removal of the herniated disc with laminotomy (a small hole in the bone of the spine surrounding the spinal cord), laminectomy (removal of the bony wall), by needle technique through the skin (percutaneous discectomy), disc-dissolving procedures (chemonucleolysis), and others.

[0016] When narrowing of the spaces in the spine results in compression of the nerve roots or spinal cord by bony spurs or soft tissues, such as discs, in the spinal canal this condition is known as spinal stenosis. Spinal stenosis occurs most often in the lumbar spine, i.e., the lower back, but also occurs in the cervical spine and less often in the thoracic spine. It is most often caused by degeneration of the discs between the vertebrae due to osteoarthritis. Rheumatoid arthritis usually affects people at an earlier age than osteoarthritis does and is associated with inflammation and enlargement of the soft tissues of the joints. The portions of the vertebral column with the greatest mobility, i.e., the cervical spine, are often the ones most affected in people with rheumatoid arthritis. Non-arthritic causes of spinal stenosis include tumors of the spine, trauma, Paget's disease of bone, and fluorosis

[0017] In the context of the present invention, therapeutic procedures to alleviate pain are restore function are described in a progression of treatment from spinal arthroplasty to spinal arthrodesis. As used herein, spinal arthroplasty encompasses options for treating disc degeneration when arthrodesis is deemed too radical an intervention based on an assessment of the patient's age, degree of disc degeneration, and prognosis.

[0018] A wide variety of efforts have been proposed or attempted in the prior art, in an effort to relieve back pain and restore physiological function. Notwithstanding these efforts, there remains a need for methods and tools for accessing and preparing an intervertebral motion segment for subsequent therapeutic procedures, which can be accomplished in a minimally invasive manner.

SUMMARY OF THE INVENTION

[0019] The preferred embodiments of the invention involve surgical tools sets and methods for accessing and preparing vertebral elements, such as inter-vertebral motion segments located within a human lumbar and sacral spine, for therapeutic procedures. In the context of the present invention, "motion segments" comprise adjacent vertebrae separated by intact or damaged spinal discs.

[0020] In particular embodiments of the present invention, instrumentation system components and their means of use, individually and in combination and over or through one another, form or enlarge a posterior or anterior percutaneous tract; access, fragment and extract tissue (e.g., nucleus pulposus,); or otherwise prepare vertebral elements and inter-vertebral motion segments for fusion or dynamic stabilization via implantation of therapeutic agents and materials and spinal devices, are disclosed. It will be noted that the tools described can be used for and with the introduction of any number of devices, such as, for example, fusion devices, mobility devices, etc. Instrumentation is introduced and aligned (e.g., via preferably fluoroscopy, endoscopy, or other radio-imaging means, used as guidance to insure that the channel is positioned mid-line or along another desired reference axis relative to the anterior/posterior and lateral sacral view) through the percutaneous pathways and according to the trans-sacral axial access methods disclosed by Cragg, in commonly assigned U.S. Pat. Nos. 6,558,386, 6,558,390, and 6,575,979, each incorporated herein in their entirely by reference.

[0021] In another aspect, the present invention provides a series of surgical tools and devices, wherein the preferred embodiments of each are configured and constructed (e.g., cannulated; solid; blunt; beveled; angled; retractable; fixed; tilted; axially aligned; offset; extendible; exchangeable; stiff; flexible; deformable; recoverable; anchored; removable; biocompatible; able to be sterilized & machined; moldable; reusable; disposable) in accordance with optimal intended function and in deference to biomechanical and safety constraints.

[0022] Certain of the surgical tools take the form of elongated solid body members extending from proximal to distal ends thereof. Such solid body members may be used in combination or sequentially with elongated, cannulated body members. Hence, for example, design constraints, in addition to outside diameter (O.D.) tolerances and limitations imposed by virtue of patient anatomies, such as tube wall thickness, material selection/mechanical strength, and inside diameter (I.D.) also become considerations, e.g., to enable unrestricted passage over guide members or through hollow body members without incurring deformation that may impair or otherwise preclude intended function. Certain of these solid body and hollow body members can have distal means, mechanisms, or apertures that may be configured or manipulated for either precluding or facilitating engagement with tissue; the latter including piercing; tapping; dilating; excising; fragmenting; extracting; drilling; distracting (e.g. elevating); repairing; restoring; augmenting; tamping; anchoring; stabilizing; fixing, or fusing tissue. Certain of these solid body and hollow body members can have proximal means, mechanisms, pins, slots or apertures that may be configured or manipulated to engage; grasp; twist; pilot; angle; align; extend; expose, retract; drive;

attach or otherwise interact to enable or facilitate the functionality of other components within the surgical tools set, e.g., the distal means and mechanisms noted above in this paragraph. In accordance with the certain embodiments disclosed herein, the individual components comprised in the tools sets, or kits, may include a guide pin introducer; guide pins with various distal end and proximal end configurations (e.g., tips; handles, respectively); soft tissue and bone dilators and dilator sheath(s); cutters; tissue extraction tools; twist drills; exchange systems comprising exchange bushing and exchange cannula assemblies; distraction tools; augmentation materials, and repair tools.

[0023] In a particularly preferred procedure, these instrumentation system components are aligned axially, under visualization, and progressively inserted into a human lumbar-sacral spine through the minimally invasive percutaneous entry site adjacent the coccyx to access the L5-S1 or L4-L5 disc space to perform a partial or total nucleectomy, without compromising the annulus fibrosis, unlike current surgical discectomy procedures. Conventional discectomies are performed through a surgically created or enlarged hole in the annulus that remains post-operatively, and represents a undesirable pathway due to the potential for extrusion and migration of natural or augmented tissue, or implants, and that also compromise the biomechanics of the physiological disc structure.

[0024] Moreover, in accordance with the techniques and surgical tool sets, and in particular the cutters and extraction tool configurations disclosed herein, a substantially greater amount (volume) of intradiscal material e.g., nucleus pulposus and cartilage, in comparison with other discectomy procedures in practice, may be removed, as needed. In particular, the instrumentation systems and techniques embodied in the present invention more effectively, with less immediate trauma, and without residual negative physiological impacts that may occur as a result of invasion of the annulus, prepare an inter-vertebral motion segment for subsequent receipt of therapeutic procedures, and enables axial placement of implants close to and in alignment with the human spine's physiological center of rotation.

[0025] Other specific advantages over current practice include: the patient is in a prone position that is easily adaptable to other posterior instrumentation; blood loss is minimal soft tissue structures, e.g., veins, arteries, nerves are preserved, and substantially less surgical and anesthesia time are required compared with conventional procedures.

[0026] In accordance with one aspect of the present invention, there is provided an access assembly for guiding instrumentation through soft tissue to a point on the spine. The assembly comprises an elongate tubular guide pin introducer, and a blunt tipped stylet, slidably positionable within the guide. A guide pin is also slidably positionable within the guide pin introducer. The guide pin may comprise a beveled distal end, and a proximal handle. The handle may be removably carried by the guide pin. The stylet may comprise a proximal handle.

[0027] The guide pin may comprise a sharpened distal tip. The proximal handle on the stylet may be releasably engagable with the guide pin introducer. The guide pin may comprise a proximal connector for connection to a guide pin extension. A distal end of the stylet may be exposed beyond a distal end of the guide pin introducer, when the stylet is engaged with the guide pin introducer.

[0028] In accordance with a further aspect of the present invention, there is provided a guide pin introducer. The introducer comprises an introducer tube, having a proximal end, a distal end, and a central lumen extending therethrough. A handle is provided on the proximal end. A blunt tipped stylet is axially movably positionable within the introducer tube. A lock is provided, for releasably retaining the stylet within the introducer tube.

[0029] The blunt tip of the stylet may be exposed beyond the distal end when the stylet is locked within the introducer tube. The lock may comprise a first surface structure carried by the stylet, which is releasably engageable with a second complimentary surface structure carried by the introducer tube. One of the first and second surface structures may comprise a pin, and the other of the first and second surface structures may comprise a slot. The introducer tube may comprise a beveled tip.

[0030] These and other advantages and features of the surgical tools sets and techniques disclosed in the present invention will be more readily understood from the following detailed description of the preferred embodiments thereof, when considered in conjunction with the accompanying figures.

BRIEF DESCRIPTION OF THE DRAWINGS

[0031] FIG. 1A provides a lateral view of a normal spinal column.

[0032] FIG. 1B illustrates examples of normal, degenerated, bulging, herniated, and thinning spinal discs.

[0033] FIG. 1C is a lateral view of the lumbar and sacral portion of the spinal column depicting the visualized anterior axial instrumentation/implant line (AAIIL) extending cephalad and axially from the anterior laminectomy site target point.

[0034] FIG. 1D is an illustration of an anterior target point on the sacrrum

[0035] FIGS. 1E and 1F are cross-sectional caudal views of a lumbar vertebrae depicting one and two trans sacral axial implants respectively within corresponding TASII bores formed in parallel with the visualized AAIIL of FIG. 1C.

[0036] FIGS. 2A and 2B are a perspective view and a side cross-sectional view of one embodiment of a guide pin introducer, respectively, with pin and slot configuration.

[0037] FIG. 2C is a side cross-sectional view of one embodiment of a stylet with pin configuration.

[0038] FIG. 2D is a perspective view of one embodiment of a guide pin introducer-stylet-pin and slot configured assembly.

[0039] FIG. 2E is a side cross-sectional view of the assembly of FIG. 2D.

[0040] FIG. 3A is a perspective view of one embodiment of a guide pin introducer.

[0041] FIG. 3B is a side cross-sectional view of the guide pin introducer of FIG. 3A.

[0042] FIG. 3C is a side cross-sectional view of one embodiment of a stylet with multi-start thread configuration.

[0043] FIG. 3D is a perspective view of one embodiment of a guide pin introducer-stylet multi-start thread configured assembly.

[0044] FIG. 3E is a side cross-sectional view of the assembly of FIG. 3D.

[0045] FIGS. 4 and 5 are lateral, partial cross-sectional views of the lumbar and sacral portion of the spine depicting delivery of the distal end of guide pin introducer-stylet-assembly to the anterior surface of the S1 vertebral body.

[0046] FIG. 6A is a side view of a guide pin detailing distal and proximal ends.

[0047] FIG. 6B is a side view of the distal end of one embodiment of a guide pin with a trocar tip configuration.

[0048] FIG. 6C is a side view of the distal end of an embodiment of a guide pin with a beveled tip configuration.

[0049] FIG. 6D is a side view of the proximal end of a preferred embodiment of a guide pin with a hex and flat configuration as means for tip alignment and axial and rotational locking.

[0050] FIG. 7A is a cross sectional view of a guide pin-guide pin handle assembly.

[0051] FIG. 7B is a cross sectional view of a guide pin handle.

[0052] FIG. 7C depicts the thumb screw, for locking the guide pin.

[0053] FIG. 7D illustrates a means for guide pin stop and steering.

[0054] FIG. 7E depicts a guide pin assembly inserted within an introducer illustrating the guide pin tip extending beyond the distal end of the introducer.

[0055] FIG. 7F is a cross section view illustrating a guide pin handle assembly, showing a releasable engagement means with the guide pin.

[0056] FIG. 8A illustrates a guide pin-guide pin extension assembly with a threaded engagement coupling.

[0057] FIG. 8B is a detailed view of guide pin-guide pin extension assembly with a threaded engagement coupling.

[0058] FIG. 8C illustrates a guide pin with a cross-sectional view of female thread engagement coupling.

[0059] FIG. 8D is an enlarged view of the female thread engagement coupling in FIG. 8C.

[0060] FIG. 8E illustrates the guide pin extension with a cross-sectional view of a male thread engagement coupling.

[0061] FIG. 8F is an enlarged view of the male thread engagement in FIG. 8E.

[0062] FIG. 8G illustrates an alternative embodiment of a guide pin-guide pin extension assembly with a friction fit engagement coupling.

[0063] FIG. 9 is a side view of a slap hammer and a dilator handle on an extended guide pin.

[0064] FIG. 10 is an elevated view of three differently sized dilators.

[0065] FIG. 11 is a perspective view of one embodiment of a dilator.

[0066] FIG. 12 is a side cross-sectional view of the distal portion of the dilator in FIG. 11.

[0067] FIG. 13A is a perspective view of one embodiment of a large dilator with a dilator sheath.

[0068] FIG. 13B is a side cross-sectional view of a distal portion of the large dilator within the dilator sheath of FIG. 13A.

[0069] FIG. 13C is a perspective view of the sheath of the large dilator of FIG. 13A.

[0070] FIG. 13D is a perspective view of another embodiment of a large dilator sheath.

[0071] FIG. 14 is a side view of one embodiment of a twist drill.

[0072] FIG. 15 shows a cutter extending through a dilator sheath (docking cannula) in the L5-S1 disc space.

[0073] FIG. 16A is a perspective view of one embodiment of a cutter assembly that comprises a down-cutter.

[0074] FIG. 16B is a side cross-sectional view of the cutter assembly of FIG. 16A.

[0075] FIG. 16C is an exploded, perspective view of the distal portion of the cutter assembly of FIG. 16A.

[0076] FIGS. 16D and 16E are elevated views of one embodiment of a small down-cutter.

[0077] FIG. 16F is a cross sectional view of a proximal cutter blade arm (402') for nucleectomy prior to a mobility preservation procedure taken along the line 16F-16F in FIG. 16E.

[0078] FIG. 16G is a cross sectional view of a proximal cutter blade arm (402') for nucleectomy prior to a fusion procedure taken along the line 16F-16F in FIG. 16E. The inclined plane (421) is a mirror image of that in of FIG. 16F.

[0079] FIG. 16H illustrates one embodiment of an upcutter (452).

[0080] FIG. 16I is a cross sectional view of a distal sleeve-shaft configuration showing a retraction stop mechanism for both a tissue cutter.

[0081] FIG. 17A is an exploded, perspective view of the distal portion of a cutter assembly that comprises a debulker.

[0082] FIGS. 17B-17C are elevated views of the debulker of the cutter assembly of FIG. 17A.

[0083] FIGS. 17D-17E are elevated views of one embodiment of a large debulker.

[0084] FIG. 18A is an elevated view of one embodiment of a large teardrop debulker.

[0085] FIG. 18B is a rear elevational view of the portion teardrop debulker of FIG. 18A which attaches to the rotatable shaft.

[0086] FIG. 18C is another elevated view of a larger teardrop debulker of FIG. 18A.

[0087] FIG. 18D is an elevated view of one embodiment of a standard or medium size teardrop debulker.

[0088] FIG. 18E is a side isometric view of one embodiment of a large teardrop down-cutter.

[0089] FIG. 18F is a side isometric view of one embodiment of a medium teardrop down-cutter.

[0090] FIG. 18G is a side isometric view of one embodiment of a small teardrop down-cutter.

[0091] FIG. 19A is a side elevated perspective view of one embodiment of an extractor assembly unit.

[0092] FIG. 19B is a side elevated, partial cut-away view of the extractor assembly unit of FIG. 19A.

[0093] FIG. 19C is a side cross-sectional view of the extractor assembly unit of FIG. 19A.

[0094] FIG. 19D is a side elevated view of an extractor head prior to having its component wires unwound.

[0095] FIG. 20 illustrates the distal end of one embodiment of an extraction tool with tissue fragments within its wire strands.

[0096] FIGS. 21A-B illustrate one embodiment of an extractor tool with its head extended into an exposed position and then pulled back into a delivery sleeve.

[0097] FIGS. 21C-D illustrate another embodiment of an extractor tool with its head in the extended position.

[0098] FIGS. 22A-B illustrate another embodiment of an extraction tool.

[0099] FIG. 23A is a perspective view of one embodiment of an insertion tool assembly comprising a packing instrument and a delivery cannula.

[0100] FIG. 23B illustrates engagement of the packing instrument with the delivery cannula, both from FIG. 23A.

[0101] FIG. 23C is perspective view of the packing instrument of FIG. 23A.

[0102] FIG. 23D is a perspective view of the delivery cannula of FIG. 23A.

[0103] FIG. 24A is a perspective view of one embodiment of a paste-inserter assembly.

[0104] FIG. 24B is a side cross-sectional view the assembly of FIG. 24A.

[0105] FIG. 25A is a perspective view of one embodiment of an allograft placement tool.

[0106] FIG. 25B is a side cross-sectional view of the tool of FIG. 25A.

[0107] FIG. 25C is a side cross-sectional view of the allograft tip of the tool of FIG. 25A.

[0108] FIG. 26 is a side elevated view of an exchange bushing.

[0109] FIG. 27 is a side view of one embodiment of an exchange system assembly comprising an exchange bushing and an exchange cannula.

[0110] FIG. 28A is a side elevated, cut-away view of one embodiment of an exchange cannula of FIG. 27, in an open configuration.

[0111] FIG. 28B is a side elevated view of the exchange cannula of FIG. 27, in a closed configuration.

[0112] FIGS. 29A-B illustrate the use of the exchange system of FIGS. 26-28 to deliver a distraction device or an axial spinal implant of larger diameter than the dilater sheath.

[0113] FIG. 30A is side cross-sectional view of another embodiment of an exchange system assembly comprising an exchange bushing and an exchange tube.

[0114] FIG. 30B is a side cross-sectional view of the exchange bushing of FIG. 30A.

[0115] FIG. 30C is a side cross-sectional view of the exchange tube of FIG. 30A.

[0116] FIG. 30D is a perspective view of another embodiment of an exchange system comprising an exchange bushing and an exchange tube.

[0117] FIG. 30E is a bottom perspective view of the exchange system of FIG. 30D.

[0118] FIG. 31 is a perspective view of one embodiment of a temporary distraction rod and a tool that can be used to deliver or remove the rod from a treatment site.

[0119] FIG. 32A is a perspective, partial cut-away view of the temporary distraction rod of FIG. 32A and the distal portion of a tool that can be used to deliver the rod to the treatment site.

[0120] FIG. 32B is a perspective, partial cut-away view of the temporary distraction rod of FIG. 32A and the distal portion of a tool that can be used to remove the rod from the treatment site.

[0121] FIG. 33A is a perspective, partial cut-away view of the distal portion of one embodiment of a temporary distraction rod.

[0122] FIG. 33B is a side cross-sectional view of the rod distal portion of FIG. 33A.

[0123] FIG. 33C is a perspective view of the proximal portion of one embodiment of a temporary distraction rod.

[0124] FIG. 33D is another perspective view of the rod proximal portion of FIG. 33C.

[0125] FIG. 33E is a side cross-sectional view of the rod proximal portion of FIG. 33C.

[0126] FIG. 34A is an exploded perspective view of one embodiment of a distraction-rod-assembly shown with the insertion tool.

[0127] FIG. 34B is a perspective view of the insertion tip of the assembly of FIG. 34A.

[0128] FIG. 34C is another perspective view of the insertion tip of the assembly of FIG. 34A.

[0129] FIG. 35A is a perspective, exploded view of one embodiment of a temporary distraction-rod-assembly, shown with the removal tool.

[0130] FIG. 35B is a front perspective view of the tip of the removal tool assembly of FIG. 35A.

[0131] FIG. 35C is a rear perspective view of the tip of the removal tool assembly of FIG. 35A.

DETAILED DESCRIPTION OF THE PREFERRED EMBODIMENT

[0132] In accordance with one aspect of the embodiments described herein, there are provided surgical instrumentation systems and techniques for efficiently and atraumatically accessing and preparing treatment sites within the spine, such as, for example, vertebral motion segments, for subsequent therapeutic spinal procedures. In one approach, the step of accessing the treatment site includes using fluoroscopic imaging to visually align one or more components of the instrumentation system via a percutaneous, anterior trans-sacral axial approach. In another aspect, the treatment site includes a spinal disc and the subsequent therapeutic procedure includes nucleectomy. In yet another aspect, the therapeutic procedure includes immobilization devices to facilitate fusion; deployment of augmentation media; deployment of dynamic stabilization implants, or mobility devices to preserve or restore physiologic function.

[0133] In accordance with one aspect of the embodiments described herein, there are provided surgical tool sets and methods of using the tool sets. The tools of the tools sets can be used individually and/or in combination with each other. As will be explained in further detail below, in one approach, certain tools fit over other tools, and therefore can be used over each other. In another approach, the tools fit through each other, and therefore can be used through one another.

[0134] It will be understood that the access methods described can include the step of utilizing an anterior or posterior trans-sacral pathway. The therapies to the spinal discs and vertebral bodies described herein can be conducted on one or more spinal discs or vertebral bodies. In one approach, therapeutic procedures are performed through or on at least one spinal disc and at least one vertebral body traversed by at least one working channel.

[0135] For convenience, the exemplary access by a single anterior method, and treatment of only a single spinal disc or vertebral body is described herein. It will be understood, however, that the tools and methodologies described herein are applicable to any spinal access pathway, including without limitation open surgical procedures from any access orientation, and to any number of spinal discs and/or vertebral bodies.

[0136] FIGS. **1**C-D schematically illustrate the anterior trans-sacral axial spinal instrumentation/implant (TASII) approaches in relation to the lumbar region of the spinal column, and FIGS. **1**E-F illustrate the location of a TASII implant or pair of implants within an anterior TASII axial bore **152** or pair of TASII axial bores $\mathbf{22}_1$, $\mathbf{22}_2$, or $\mathbf{152}_1$, $\mathbf{152}_2$. Two TASII axial bores and spinal implants or rods are shown in FIG. **1**F to illustrate that a plurality, that is two or more, of the same may be formed and/or employed in side by side relation parallel with the anterior axial instrumentation/implant line (AAIIL).

[0137] The lower regions of the spinal column comprising the coccyx, fused sacral vertebrae S1-S5 forming the sacrum, and the lumbar vertebrae L1-L5 described above are depicted in a lateral view in FIG. **1**C. The series of adjacent vertebrae located within the human lumbar and sacral spine have an anterior aspect, a posterior aspect and an axial aspect, and the lumbar vertebrae are separated by intact or damaged spinal discs labeled D1-D5 in FIG. **1**C. FIG. **1**D depicts the anterior view of the sacrum and coccyx.

[0138] The method and apparatus for forming an anterior TASII axial bore initially involves accessing an anterior sacral position, e.g. an anterior target point at about the junction of S1 and S2 depicted in FIGS. **1**C and **1**D. One (or more) visualized, imaginary, axial instrumentation/implant line extends cephalad and axially in the axial aspect through the series of adjacent vertebral bodies to be fused or otherwise treated, L4 and L5 in this illustrated example. The visualized AAIIL through L4, D4, L5 and D5 extends relatively straight from the anterior target point along S1 depicted in FIGS. **1**C and **1**D, but may be curved as to follow the curvature of the spinal column in the cephalad direction.

[0139] It will be noted that the terms trans-sacral axial spinal instrumentation/implant (TASII), and anterior axial instrumentation/implant line (AAIIL), as used herein, are analogous to the terms trans-sacral axial spinal instrumentation/fusion (TASIF), and anterior axial instrumentation/fusion line (AAIFL), The analogous terms generally refer to the same percutaneous pathways, the primary difference being the types of treatments and implants delivered through the respective percutaneous pathways.

[0140] U.S. Pat. No. 6,575,979, issued Jun. 10, 2003, titled METHOD AND APPARATUS FOR PROVIDING POSTERIOR OR ANTERIOR TRANS-SACRAL ACCESS TO SPINAL VERTEBRAE, hereby incorporated in its entirety into this disclosure by reference, discloses in detail tools and methodology for accessing targeted treatment sites, such as, for example, inter-vertebral motion segments.

[0141] Certain of the access and preparation surgical tools, as explained in U.S. Pat. No. 6,575,979, take the form of elongated solid body members extending from proximal to distal ends thereof. Elongated solid body members in medical terminology include, for example, relatively stiff or flexible needles of small diameter typically used to penetrate tissue, wire stylets typically used within electrical medical leads or catheters to straighten, stiffen, or impart a curved shape to the catheter, guidewires that are used to traverse body vessel lumens and access remote points therein (certain hollow body guidewires have lumens for a number of uses), and obturators. Obturators are typically formed as rods provided in various diameters with blunt distal tips that can be manipulated to penetrate, separate or manipulate surrounding tissue without cutting or damaging the tissue.

[0142] As used herein, the term "guide pin" can include solid body members (e.g., guidewires) employed to perform the functions of guide pin delivery and guidance described herein, unless the exclusive use of a given one of such solid body members is explicitly stated. Such solid body members can be stiff or flexible and can include distal anchoring mechanisms, e.g., sharpened or beveled tips.

[0143] Certain others of the surgical tools take the form of hollow body, tubular members having lumens extending from proximal to distal ends thereof. Such hollow body, tubular members can take the form of medical catheters, medical cannulas, medical tubes, hollow needles, trocars, sheaths, or the like, or variations thereof. Such hollow body tubular members employed in various embodiments described herein can be stiff or flexible and can include distal fixation mechanisms.

[0144] As used herein, anterior refers to in front of the spinal column (ventral) and posterior refers to behind the

column (dorsal). As used herein, proximal (caudal) refers the end or region that is closer to the surgeon or sacral region of the spine, while distal (cephalad) refers to the end or region that is closer to the patient's head.

[0145] In accordance with one aspect of the embodiments described herein, there is provided a guide pin introducer that can be used to facilitate access to the sacrum for delivery of at least one guide pin, which in turn serves as means over which other instruments of the surgical tools set can subsequently be delivered to target sites to perform their intended procedural functions, individually or in combination, over or through one another.

[0146] With reference to FIGS. **2**A-B, in one aspect the guide pin introducer **100** comprises an introducer tube **102** and an introducer handle **110**. The introducer tube **102** extends between a distal end **104** and a proximal end **106**, and defines an inner, tubular member lumen **108**. The length of the tube **102** is typically in the range of about 4" (100 mm) to about 12" (310 mm), often about 5" (120 mm) to about 9" (230 mm). In one exemplary embodiment, the length of the tube **102** is approximately 7". The tube **102** is preferably long enough to extend from a skin incision **190** near the paracoccygeal region, through the pre-sacral space, to an anterior target point **192**, as shown, for example, in FIGS. **4** and **5**.

[0147] With reference to FIGS. **3**A and **3**B, an exemplary embodiment of a guide pin introducer with multi-start thread **199** assembly engagement means is shown. The inner diameter (I.D.) of the introducer tube **102** is typically in the range of about 2 mm to about 5 mm, often about 3 mm to about 4 mm. In one exemplary embodiment, I.D. of the tube **102** is about 3.5 mm (0.13"). The outer diameter (O.D.) of the tube **102** is typically in the range of about 4 mm to about 7 mm, often about 5 mm to about 6 mm. In one exemplary embodiment, O.D. of the tube **102** is about 5.5 mm, with an I.D. dimensioned to slidably receive the distally located blunt tip **122** of the stylet **119**, as shown in FIGS. **2**C-**2**E

[0148] It will be noted that the actual dimensions (e.g, length, inner diameter, outer diameter, etc.) of the tube **102** or any of the tools and components parts thereof described herein will depend in part on the nature of the treatment procedure and the physical characteristics of the patient, as well as the construction materials and intended functionality, as will be apparent to those of skill in the art.

[0149] The edge **105** at the distal end **104** of the tube **102** can comprise any number of configurations. In one embodiment, the edge **105** is at approximately a 90 degree angle relative to the longitudinal axis of the tube **102**. In another embodiment, the edge **105** is beveled at an angle relative to the longitudinal axis of the tube **102**. In one exemplary embodiment, the edge **105** is beveled at an angle of about 45 degrees. The tube **102** can be made from any of a number of known suitable materials, such as, for example, stainless steel, Ni—Ti alloys, or structural polymeric materials, or composites thereof.

[0150] With continued reference to FIGS. **4** and **5**, in one mode of use, the guide pin introducer tube **102** serves as an enlarged diameter anterior tract sheath through which a guide pin, described in further detail below, can be introduced into the targeted site **192**.

[0151] With reference to FIG. **2**A-**2**B, the introducer handle **110** extends between a distal end **111** and a proximal end **113**, and defines a tubular member lumen **109** that is stepped or tapered toward the distal end **111**. The handle **110** comprises a slot at its distal end which is dimensioned to receive a section of the tube **102** beginning at the tube proximal end **106**. The handle **110** and tube **102** can be molded, machined or otherwise formed as an integral unit, or can be affixed to each other by any of a variety of known attachment means, such as, for example, thermal bonding, adhesives, or press fits.

[0152] The introducer handle **110** can be made from any of a number of known suitable materials, such as, for example, polysulfone, polyvinylidene fluoride, polyethylenes, PEEK, or composites thereof. In one embodiment, introducer handle **110** is fabricated from an injection-molded part, made from an acetal-based copolymer, such as Delrin™ obtained from the DuPont Company in Wilmington, Del., that is then machined with an I.D. of about 13 mm (0.50") and an O.D. of about 19 mm (0.75"). Here, the overall length of the guide pin introducer **100** (i.e., the length of the tube **102** and integral handle **110**, in total) is about 300 mm (11.95").

[0153] In accordance with one aspect of the embodiments described herein, there is provided a stylet with a blunt distal tip that can inserted into the guide pin introducer described above to facilitate advancement of the guide pin introducer to the targeted site without causing damage to surrounding tissue.

[0154] With reference to FIGS. **2**D-E, in one embodiment, the stylet **119** comprises an elongate body or rod **120** that extends between a distal end **122** and a proximal end **124**. The distal end **122** of the stylet rod **120** preferably comprises a blunt tip, thereby preventing damage to surrounding soft tissue as the guide pin introducer-stylet-pin-slot configuration assembly **134** (the approach assembly), which comprises the introducer **100** and stylet **119**, described in further detail below, is advanced toward the targeted site, such as, for example, target point **192**, shown in FIG. **4**B.

[0155] With reference to FIGS. **2**C-**2**E and FIGS. **4** and **5**, in order to advance the introducer tube **102** through an anterior tract to the target point **192** without concomitant damage to surrounding soft tissue, a stylet **119** can be used in combination with the guide pin introducer **100** by advancing the introducer-stylet-approach assembly **134** to the target area or point **192**.

[0156] The length of the rod **120** should be designed so that the stylet's blunt tip **122** extends beyond the distal end **104** of the guide pin introducer tube **102**. In one embodiment, the rod **120** has an O.D. of about 3.2 mm (0.125"), which is less than the I.D. of the guide pin introducer **100**. The stylet rod **120** can be made from any number of known suitable materials, such as, for example, stainless steel or the like.

[0157] The stylet handle **126** extends between a distal end **128** and a proximal end **130**, and comprises a distally located bore **129** to receive the section of the stylet rod **120** beginning at the rod proximal end **124**.

[0158] The length of the stylet handle **126** is typically in the range of about 3" (75 mm) to about 7" (175 mm), often about 4" (100 mm) to about 6" (150 mm). The O.D. of the handle **126** is typically in the range of about 0.25" (6 mm) to about 0.75" (20 mm), and generally dimensioned to

cooperate with the introducer handle **110** to form the introducer (approach) assembly **134**.

[**0159**] In one embodiment, the stylet handle **126** has a diameter of about 12 mm to about 13 mm (e.g., about 0.50") at the distal end **128** that increases to about 20 mm (0.75") at the proximal end **130**. The length of the exposed rod **120** and narrow portion of the handle **126** together is about 300 mm (12") so that just the tip **122** of the stylet **119** will protrude from the distal end **104** of the introducer tube **102** upon assembly with the guide pin introducer **100**. The narrow portion of the stylet handle **126** is configured to fit in a tubular member lumen **109** machined to receive it within the handle **110** of the guide pin introducer **100**.

[**0160**] The stylet handle **126** can be formed from any of a variety of materials, such as, for example, polymeric materials having desired properties (e.g., able to be machined or an injection-moldable polymer). Suitable materials include, but are not limited to polysulfone, polyvinilydene fluoride, acetal-copolymer; acrylic, high density polyethylene, low density polyethylene, nylon, polycarbonate, polypropylene, PVC, or the like, or combinations thereof.

[**0161**] With reference to FIGS. **2**A-**2**E and FIGS. **4** and **5**, in one aspect, the guide pin introducer **100** can be provided with a releasable interlock that prevents the blunt-tipped stylet **119** from retracting proximally within the lumens **108**, **109** of the cannulated guide pin introducer **100**, thereby maintaining the extension and exposure of the blunt tip **122** of the stylet **119** beyond the distal end **104** of the tube **102** as the introducer (approach) assembly **134** is advanced by the surgeon toward the target point **192**, optionally with the assistance of any known suitable visualization technique.

[**0162**] The releasable lock may comprise any of a variety of interference fit or friction fit surfaces carried by the stylet **119** for cooperating with a complementary structure on the introducer **100**. It will be noted that the releasable interlock can be on and between any of the approach assembly **134** components described herein.

[**0163**] In one embodiment, illustrated in FIGS. **2**A-E the releasable interlock of the introducer **100** comprises a track **112** that is configured to accept the locking pin **139** of the stylet **119**, described in further detail below. The handle **110** of the introducer **100** comprises an axially extending slot or track **112**, machined or otherwise formed through the wall of the handle **110**. Track **112** is positioned with an open end beginning at the proximal end **113** and extends longitudinally in the distal direction along the handle **110** with a circumferentially extending notch **107** at the distal end of the track **112**.

[**0164**] The stylet handle **126** comprises a radially outwardly extending engagement structure such as a locking pin **139** that is configured to slideably fit within the track **112** of the introducer handle **110**. As the stylet handle **126** is advanced distally into engagement with the introducer handle **110**, the locking pin **139** advanced distally through the opening on the proximal end **113** of the introducer handle **110**, and along the axially extending track **112**. Once the stylet handle **126** has been advanced fully into engagement with the introducer handle **110**, rotation of the stylet handle **126** with respect to the introducer handle **110** advances the locking pin **139** into the circumferentially extending notch **107**. The locking pin **139** serves as an interior stop or locking lug that releasably secures the stylet handle **126** within the introducer handle **110**. In one embodiment, the locking pin **139** comprises a 0.125" (3.2 mm)×0.625" (15.8 mm) dowel pin.

[**0165**] In one embodiment, shown in FIGS. **2**D-**2**E, the approach assembly **134** comprises the introducer **100** and the stylet **119** which are releasably interlocked to each other. The stylet handle **126** and the guide pin introducer **100** can be mutually releasably engaged by the above-described locking pin **139**, other complementary surface structures, twist-lock mechanisms, such as in a preferred multi-start thread configuration shown in FIGS. **3**A-**3**E; a modified Luer lock, or any other known suitable mechanism that enables mechanical quick release (e.g., relative to another embodiment that uses a press-fit method of engagement of the respective handles). With respect to the multi-start thread configuration shown in FIGS. **3**A-**3**E, the guide pin introducer **100** has internal threads **199** on the proximal end **113** that engage with external threads **198** on stylet handle **126**. Engagement and disengagement of the assembly **134'** is by means of twist-lock. These quick release mechanisms facilitate disengagement of the stylet handle **126** from the guide pin introducer handle **110** once the distal end **104** of the guide pin introducer tube **102** is brought into relatively close proximity to the target **192**. The stylet **119** can be disengaged from the rest of the approach assembly **134** and removed from the patient's body.

[**0166**] With reference to FIGS. **2**D-**2**E, in one exemplary method of use, the stylet **119** is inserted into the lumens **108**, **109** of the introducer tube **100** in a manner and configuration such that the blunt tip **122** extends and is preferably exposed from about 1 mm to about 2 mm beyond the distal end **104** of the guide pin introducer **100**. In this manner, the blunt tip **122** of the stylet **119** serves as a soft tissue dilator that assists in the safe and atraumatic positioning of the distal end **104** of the guide pin introducer tube **102** in close proximity to the anterior target site **192**.

[**0167**] The stylet rod **120** is inserted into the cylindrical polymeric handle **126** so that about 200 mm (about 7.76") of the rod **120** extends out of the handle **126**, into and through introducer tube **102**, and beyond the introducer tube distal end **104**, so that the distal end blunt tip **122** of the rod **120** is exposed at the distal most end of the approach or introducer assembly **134**.

[**0168**] As shown in FIGS. **4** and **5**, in one exemplary method of use, the spine is accessed via a small skin puncture **190** adjacent to the tip of the coccyx bone. The pre-sacral space is entered using any known suitable percutaneous technique. The introducer assembly **134**, with the stylet's blunt tip **122** serving as a dilator, is advanced through the paracoccygeal entry site. Once the tip **122** of the stylet **119** is advanced through the facial layer, the blunt tip **122** is positioned against the anterior face of the sacrum and advanced along the anterior surface of the sacrum to the desired position or targeted site **192**—here, the S1 vertebral body. In one embodiment, the distal portion of the approach assembly **134** is advanced to the targeted site under fluoroscopic guidance, as is described in co-pending U.S. patent application Ser. No. 10/125,771, filed on Apr. 18, 2002, titled METHOD AND APPARATUS FOR SPINAL AUGMENTATION.

[**0169**] The stylet **119** is released and removed from the approach assembly **134** after the distal portion of the assem-

bly **134** is advanced to the targeted site **192**, thereby leaving the distal portion of the introducer **100** at the targeted site, to preface the introduction of a guide pin throught the introducter **100** to the targeted site **192**

[**0170**] In accordance with one aspect of the embodiments described herein, there is provided a guide pin that can be delivered to the targeted site through the use of a guide pin introducer, such as, for example, introducer **100** described above. In one embodiment, shown in FIG. **7**A the guide pin assembly **140** has an elongate guide pin **142** that extends between a distal end **144** and a proximal end **146**. The guide pin assembly **140** also has a sharp guide pin tip **145** at the distal end **144** and a preferably releasable handle **150** engaged at the proximal end **146**.

[**0171**] The length of the guide pin **142** is typically in the range of about 9" to about 15", often about 11" to about 13". In one exemplary embodiment, the length of the guide pin **142** is approximately 12". The length of the guide pin **142** is typically sufficiently long so that the tip **145** extends beyond the distal end **104** of the guide pin introducer tube **102** when the guide pin assembly **140** is inserted within the introducer **100**, as shown in FIG. **7**E.

[**0172**] The guide pin **142** can be made from any of a number of suitable materials, such as, for example, stainless steel, NiTi alloys, or composites thereof. In one embodiment, the guide pin **142** is formed from substantially the same materials (e.g., stainless steel) as the stylet **119** and comprises a solid, elongated body **142** with an O.D. of between about 2.2 mm (0.090") to about 3.4 mm (0.13") and a length of about between about 300 mm (12.00")-600 mm (24").

[**0173**] Unlike the stylet **119**, the guide pin tip **145** is not blunt, and may be shaped according to one among various configurations. In one embodiment, not illustrated, the guide pin tip is formed as a simple conical or two sided wedge pointed tip. In another embodiment, shown in FIG. **6**B, the tip **145'** is formed as a trocar tip that has a three-sided bevel at 15 degrees. In still another embodiment, shown in FIG. **6**C, the tip **145"** is formed as a beveled tip that has one side beveled at an angle. The angle can range, for example, from about 30 degrees to about 60 degrees relative to the longitudinal axis of the guide pin **142**. The selection of the tip **145** geometry is influenced by the need to initially tack the guide pin **142** into the target, such as, for example, the sacral face, without having the guide pin **142** slip off or slide up the target surface. Pointed tip geometries enable the guide pin **142** to snag the sacral face, and thus eliminate "skidding" effects that may otherwise accompany tapping the target surface.

[**0174**] With continued reference to FIG. **7**A-**7**D, in one embodiment, the guide pin assembly **140** comprises a guide pin handle **150'** that comprises a distal end **152'** and a proximal end **154'**, and comprises a distally located lumen **175** to receive a section of the guide pin **142'** beginning at the guide pin proximal end **146'**. In one aspect, the guide pin handle assembly **180** shown in FIG. **7**F comprising the guide pin handle **150** and thumb/set screw element **170** is configured to align and releasably engage the guide pin **142**. In method of use, for example, a flat on guide pin **142** (see FIG. **6**D) is positioned in a predetermined relationship to the bevel on guide pin tip **145**, so that when the guide pin is assembled and locked within the guide pin handle, wherein the thumb screw is advanced against the flat of the guide pin, this enables the clinician to determine, with reference to the thumb screw, visual or tactile indicia on the proximal handle which will indicate the rotational orientation of the beveled tip. Thus in this manner, the surgeon is able to determine, and adjust or "steer" the guide pin tip **145** position. In another aspect of alignment and releasable engagement mechanisms, the guide pin handle assembly **180** comprises a metal hexagonal or square socket **178** within the insert **172** of the guide pin handle assembly **180** when mated with the proximal end of the guide pin hex **181** and flat **182** (FIG. **6**D) it provides a positive stop precluding longitudinal and rotational motion of the guide pin **142** relative to the guide pin handle **150**.

[**0175**] In one embodiment, the handle **150** has an O.D. of about 12 mm (0.50") on its distal end **152**, an O.D. of about 20 mm (0.75") on its proximal end **154**, and is approximately 100 mm (4") in length. A bore **175** is formed in the distal end **152** extending substantially through the guide pin handle **150**, of about 3.5 mm (0.13") (i.e., substantially the same as the O.D. of the guide pin **142**), into which the guide pin **142** can be releasably inserted.

[**0176**] The guide pin handle **150** can be formed from any of a variety of materials, such as, for example, polymeric materials having desired properties (e.g., able to be machined or an injection-moldable polymer). Suitable materials include but are not limited to sterilizable polymeric materials, e.g., polyvinylidine fluoride; polysulfone; acetal-copolymer; acrylic, high density polyethylene, low density polyethylene, nylon, polycarbonate, polypropylene, PVC, or the like, or combinations thereof.

[**0177**] The guide pin handle **150** is configured to be able to "steer" a guide pin **142** in the event that there is axial misalignment of the its after insertion. In the context of the present invention, "steer" refers to an ability to manipulate by turning and make controlled positional adjustments of a guide pin **142** once it is tapped through the cortical bone of its anterior target **192**. Specifically, the thumb/set screw **170** (FIG. **7**C) serves as a point of reference to the tip **145** orientation and is particularly configured to mark the alignment of the guide pin's beveled tip **145**, as opposed to the face of the beveled plane. When the guide pin is advanced it will tend to deviate in the direction of beveled tip, which is indicated, e.g., by the thumb screw. For example, if upon insertion the beveled plane of the tip **145** faces anterior, the guide pin **142** will track in the posterior direction when advanced.

[**0178**] While the visualization of the guide pin **142** in situ is facilitated, for example, by fluoroscopy, resolution limitations are frequently less ideal with respect to the guide pin tip **145** configuration. For this reason, the addition of the set screw **155** and thus the ability to steer the guide pin **142** via its handle **150** represent a significant procedural advantage enabled by the tools and techniques of the present invention.

[**0179**] One exemplary method of use involves: advancing the distal portion of a delivery assembly **159** to the targeted site; removing the guide pin handle **150**; removing the introducer **100**; and leaving the guide pin **142** at, and attached to, the targeted site **192**. In one approach, the guide pin handle **150** and the introducer **100** are removed separately. In another approach, the handle **150** and the introducer **100** are removed together, leaving only the guide pin **142** in place.

[0180] Disengagement of the guide pin handle **150** from the proximal end **146** of the guide pin **142** enables extension of the guide pin's elongate body length through the addition of an extension **160** that can be attached to extend the length of the pins, thereby resulting in an extended guide pin, such as, for example, the long guide pin **164"** of FIG. **8**A which extends between a distal end **144"** and a proximal end **146"**.

[0181] In accordance with one aspect of the embodiments described herein, there is provided a guide pin that can be extended in length to facilitate the subsequent delivery and utilization of other access and preparation tools.

[0182] With reference to FIG. **8**G, in one embodiment, the guide pin **142** can be extended in length along its longitudinal axis via the addition of an extension **160**, which has a connector **162** on its distal end. In this exemplary embodiment, the extension **160** comprises an exchange pin, and the connector **162** comprises a roll pin.

[0183] The guide pin **142** has a bore that is located at its proximal end **146** and that is dimensioned to receive a distal portion of the connector **162**. The extension **160** has a bore that is located at its distal end and that is dimensioned to receive a proximal portion of the connector **162**.

[0184] In one embodiment, the guide pin **142**, extension **160**, and connector **162** are releasably interconnected by any known suitable approach, such as, for example, an interference fit or friction fit or the like. In one embodiment, the connector **162** is fixedly secured to the distal end of the extension **160** and the connector is releasably secured to the proximal end of the guide pin **142**.

[0185] With reference to FIGS. **8**A-F, in a preferred embodiment, the extended guide pin **164"** comprises a guide pin **142"** and an extension **160"** that are connected to each other through the use of a connector **165**, which protrudes from the distal end of the extension **160"**. The proximal end of the guide pin **142"** has a threaded bore **148** at its proximal end **146"** that is dimensioned to receive the connector **165**.

[0186] In this preferred embodiment, the connector **165** comprises a threaded stud. The connector **165** extends between a distal end **166** and a proximal end **167** and has a smaller outer diameter towards its distal end **166**, as compared to the larger outer diameter toward its proximal end **167**. The connector **165** comprises screw threads **168** for releasably securing the extension **160"** to the guide pin **142"**, which itself has a threaded bore **148** having threads **149** that is complementary to the threads **168** of the connector **165**.

[0187] The length of the extended guide pins (e.g., 164, 164") can range from about 400 mm to about 800 mm, often about 500 mm to about 700 mm. In one embodiment, the length of pin **164** is about 600 mm (24.00").

[0188] In one exemplary method of use, following the delivery of the introducer-stylet approach assembly **134** to the targeted site **192** and removal of the stylet **119** from the introducer **100**, a guide pin-guide pin handle assembly **140** is inserted into the cannulated guide pin introducer **100**. As the guide pin **142** is initially tapped into the sacrum it is in effect serving as a bone dilator. Once the guide pin tip **145** has been inserted (tapped) into the anterior face of the S1 vertebral body, the guide pin introducer **100** and the guide pin handle **150** are removed, to enable engagement of the guide pin **142** with the guide pin extension **160**.

[0189] Subsequent components from among the surgical tools sets described herein, which generally have a greater O.D. than the extended guide pin **164**, are introduced to the target site **192** by concentric passage over the extended guide pin **164**. The subsequent components can be advanced over the extended pin **164** individually or in combination, over or through one another, to the targeted site **192**. For example, in one approach, the first tools in the sequence of instruments to be delivered over the guide pin **164** are bone dilators, described in further detail below.

[0190] In accordance with one aspect of the embodiments described herein, there are provided certain materials which can enhance visualization of tools via radio-imaging (e.g., fluoroscopy). Examples of such materials include stainless steel where tools or portions thereof comprise metal, and powders, such as barium sulfate, for components configured from polymeric materials, e.g., bushings, that may be inserted within the body cavity. It will be understood that such materials can be incorporated during the formation of certain metal or polymeric compounds comprised in the surgical tools sets and devices disclosed herein.

[0191] Although dilation of soft tissue is common for certain surgeries, dilation of bone tissue is generally not a common technique for orthopedic procedures. In one approach, dilating bone in the spine involves: widening the axial pathway or channel in preparation for subsequent treatments by compressing cancellous bone or cortical bone shell to the side rather than removal via cutting or coring such bone material.

[0192] Compression is usually a less traumatic procedure than coring with, for example, an electrically powered drill, as the latter may inadvertently cut or tear soft tissue, including nerves or blood vessels. Less bleeding of the bone occurs with dilation, which is an unanticipated benefit. It is believed that the compression of the bone by the dilator results in a tamponade effect so that the amount of bleeding from bone accompanying this procedure is reduced. Compression appears to afford stronger "anchoring", for subsequent implants (e.g., implants with threading) within an inter-vertebral space. It is also possible that compression may have a long term beneficial impact via the initiation of subsequent osteogenic (bone growth) effects.

[0193] In accordance with one aspect of the embodiments described herein, there are provided bone dilators that can be used to create and widen one or more channels in the vertebral bodies for the ensuing passage of other instruments and devices. In one embodiment, the dilators are cannulated and can be delivered accurately to the target site, following removal of any preceding dilators, in succession one after another, each directly over the guide pin. In another embodiment, the dilators are configured to pass concentrically over a previously delivered smaller dilator (i.e., a dilator having a relatively smaller O.D than the ID of successive dilators.), without the extraction of the smaller dilator over the guide pin.

[0194] With reference to FIGS. **11-12**, in one embodiment, the dilator **200** comprises a cannulated dilator rod **202** extending between a distal end **204** and a proximal end **206**, and defines an inner lumen **212**. The dilator **200** comprises a tapered dilator tip **208** with a distal end opening **214** at the distal end **204** and a handle **210** at the proximal end **206**.

[0195] The length of the cannulated dilator **202** is typically in the range of about 150 mm to about 450 mm, often about

250 mm to about 350 mm. In one exemplary embodiment, the length of the rod **202** is approximately 300 mm (12.00").

[**0196**] The I.D. of the cannulated dilator rod **202** is typically in the range of about 2.5 mm to about 4.5 mm, often about 3 mm to about 4 mm. In one embodiment, the rod **202** has an I.D. slightly larger than about 3.5 mm (i.e., greater that the O.D. of the extended guide pin **164**) and an O.D. of about 6 mm. FIG. **10** illustrates three bone dilators $\mathbf{200}_1$, $\mathbf{200}_2$, and $\mathbf{200}_3$ having O.D. of 6 mm, 8 mm, and 10 mm, respectively.

[**0197**] The tapered dilator tip **208** is usually tapered at about 5 to about 45 degrees from O.D. to I.D. In one embodiment, the tip **208** of the dilator **200** is tapered at approximately 8 degrees from O.D. to I.D. In another embodiment, the tip **208** is tapered at about 13 degrees from O.D. to I.D.

[**0198**] The cannulated dilator rods **202** can be made from any known suitable material, such as, for example, stainless steel, aluminum, or composites thereof. In one embodiment, the dilator **200** and its component parts are machined from stainless steel tubing. Here, each dilator **200** has a handle **210** that is affixed to the dilator proximal end **206**. The handle **210** is about 100 mm (4.00") long and is engaged (e.g., by welding; press fit, etc) in the middle to assure a secure fit with the rod. With reference to FIGS. **13**A-C, in one embodiment, there is provided a large dilator construct **199**, configured as a dilator sheath **220** and a dilator rod assembly $\mathbf{200}_L$ that comprises a dilator shaft $\mathbf{202}_L$ a dilator handle $\mathbf{210}_L$, and two pins **218** as engagement means for the construct **199** The cannulated dilator shaft $\mathbf{202}_L$ extends between a distal end $\mathbf{204}_L$ and a proximal end $\mathbf{206}_L$ and defines an inner lumen $\mathbf{212}_L$. The shaft $\mathbf{202}_L$ comprises a tapered tip $\mathbf{208}_L$ with a distal end opening $\mathbf{214}_L$ at the distal end $\mathbf{204}_L$. The dilator rod assembly $\mathbf{200}_L$ comprises pins **218** extending out from the outer wall of the dilator shaft $\mathbf{202}_L$.

[**0199**] The length of the cannulated dilator rod assembly $\mathbf{200}_L$ is typically in the range of about 8" to about 16", often about 11" to about 13". In one embodiment, length of the dilator rod assembly $\mathbf{200}_L$ is approximately 300 mm (12.00"). In one embodiment, the larger diameter proximal end $\mathbf{206}_L$ of the dilator shaft $\mathbf{202}_L$ is about 75 mm (3") in length while the overall length of the dilator rod assembly $\mathbf{200}_L$ is about 300 mm. (12.00").

[**0200**] In one embodiment, the cannulated dilator shaft $\mathbf{202}_L$ has two different outer diameters. More specifically, there is a smaller diameter section of the dilator shaft $\mathbf{202}_L$ configured to be covered by the sheath **220**. The O.Ds. are typically in the range of about 5 mm to about 12 mm, often about 6 mm to about 11 mm. In a preferred embodiment, the dilator shaft $\mathbf{202}_L$ has a smaller O.D. of about 9 mm (0.35") and a larger O.D. of about 10 mm. The I.D. of the dilator shaft $\mathbf{202}_L$ is typically in the range of about 2.5 mm to about 4.5 mm, often about 3 mm to about 4 mm.

[**0201**] The tapered dilator tip $\mathbf{208}_L$ is usually tapered at about 5 to about 45 degrees from O.D. to I.D. In one embodiment, the tip $\mathbf{208}_L$ of the dilator shaft $\mathbf{202}_L$ is tapered at about 13 degrees from O.D. to I.D. In one preferred embodiment, this taper of tip $\mathbf{208}_L$ is substantially the same as the taper of the tip **226** at the distal end **222** of the dilator sheath **220**.

[**0202**] The sheath **220** comprises a sheath tube **221** that extends between a distal end **222** and a proximal end **224**, and is configured to be releasably attachable to the dilator rod assembly $\mathbf{200}_L$. In one embodiment, the sheath tube **221** comprises a tip **226** at the distal end **222** and two tracks (one shown) **229** machined into the wall of the tube **221**, that is positioned to begin at the proximal end **224** and extend longitudinally along the sheath tube **221** with a slight circumferential notch at the distal end of the track **229**.

[**0203**] The track **229** accepts the pin **218** mounted on the dilator shaft $\mathbf{202}_L$, thereby providing a releasable interlock of the dilator shaft $\mathbf{202}_L$ with the sheath **220**. In another embodiment, the large dilator construct **199** comprises any known suitable releasable lock comprising any of a variety of interference fit or friction fit surfaces carried by the dilator shaft $\mathbf{202}_L$ for cooperating with a complementary structure on the sheath **220**.

[**0204**] In one embodiment, the large dilator construct **199** comprises two tracks **229** and two locking lugs **218**. In another embodiment, the large dilator construct **199** comprises one track **229** and one pin **218**.

[**0205**] Both the dilator shaft $\mathbf{202}_L$, the sheath **220**, and their respective component parts can be made from any known suitable material, such as, for example, stainless steel, aluminum, or composites thereof. The sheath **220** is preferably fabricated from a material of sufficient stiffness to maintain its structural integrity when other access and preparation tools are subsequently introduced and utilized through the sheath cannula.

[**0206**] In one embodiment, the distal end **222** of the sheath **220** is beveled to match the taper of the dilator tip $\mathbf{208}_L$ of the large dilator rod assembly $\mathbf{200}_L$ (e.g., 10 mm dilator), thereby facilitating insertion of the rod $\mathbf{202}_L$ into the sheath **220**.

[**0207**] The length of the sheath **220** is typically in the range of about 7" to about 10", often about 8" to about 9". In one embodiment, the sheath **220** is approximately 200 mm (8.5") in length.

[**0208**] The wall thickness of the sheath **220** is typically in the range of about 0.005" to about 0.040", often about 0.008" to about 0.030". In one embodiment, the sheath **220** has an I.D. of about 9 mm (0.35") and an O.D. of about 10.5 mm (0.413").

[**0209**] The actual dimensions of the large dilator rod assembly $\mathbf{200}_L$ and its components will depend in part on the nature of the treatment procedure and the anatomical characteristics of the patient. For example, the O.D. is about 9.5 mm (0.375") for a sheath **220** used in treating relatively smaller patients, while the O.D. for the same is about 10.5 mm. (0.413") for relatively larger patients. As shown in FIG. **13**C, in one embodiment, there is provided a distal end taper **228** as a transition to enable use of a smaller distal OD dilator sheath **220** (e.g., 0.375") with a sturdier proximal wall thickness, where clinically appropriate. In another embodiment, there is no taper to the distal end of the dilator sheath **220'** (FIG. **13**D). In another embodiment, the sheath **220**, **220'** has a beveled tip **226** at the distal end **222**, which facilitates docking of the sheath **220**, **220'** to the targeted site **192**, i.e., the anterior surface of the S1 vertebral body.

[**0210**] The large dilator rod assembly $\mathbf{200}_L$ is preferably releasably interlocked to the proximal end **224** of the dilator sheath **220** and is preferably capable of being released and

removed thereby facilitating the withdrawal of the large dilator rod assembly **200**$_L$ while leaving the sheath **220** to serve as a working cannula into the targeted site, such as, for example, the anterior surface of the S1 vertebral body.

[**0211**] With reference to FIG. **9**, in one exemplary method of use, the dilator **200** is tapped with a cannulated slap hammer **230** that slides onto the extended guide pin **164**. Successive movements distally and proximally over the extended guide pin **164** that repeatedly tap against the dilator handle **210** will to advance the dilator, longitudinally, into the sacrum. In one embodiment (not shown), the hammer **230** has a flat on it to give another hammering surface, as well as for ease of use, where the additional flat prevents the hammer from rolling off of the table.

[**0212**] The use of the slap hammer **230** engaged on the extended guide pin **164**, as opposed for example, to the use of an unengaged mallet in "free space" on the proximal end **206** of a dilator **200**, enables the surgeon to focus his attention on the visualization monitor while simultaneously tapping and dilating. The axial alignment of the slap hammer **230** resulting from its use in combination with the extended guide pin **164** is advantageous in that it transfers force solely in the longitudinal direction, which precludes misshapen pathways or misalignment of subsequently introduced tools.

[**0213**] In one embodiment, the hammer **230** has a length of about 4" (100 mm). The I.D. of the cannulated hammer **230** is configured to slide over the guide pin. In one exemplary embodiment, the hammer has a lumen ID of about 3.5 mm (0.13"). The cannulated slap hammer **230** can be made from any known suitable material, such as, for example, stainless steel or the like.

[**0214**] With reference to FIG. **10**, in one exemplary method of use, a series of bone dilators **200**$_1$, **200**$_2$, and **200**$_3$, having O.D. of 6 mm, 8 mm, and 10 mm, respectively, are advanced directly over the guide wire **164**, and tapped with a slap hammer **230** to progressively widen the intervertebral channel in a stepwise manner. The last and largest dilator **200**$_L$ (**200**$_3$ in the present embodiment) is assembled with a sheath **220**. The dilator **200**$_L$ can be inserted as a preface to the subsequent introduction of successive instruments in the surgical tools sets described herein. The large dilator sheath **220** is preferably left behind to serve as a protected portal to the target location.

[**0215**] In one embodiment, the dilators and sheaths (e.g., sheath **220**) are coated with a surfactant, hydrophilic hydrogel, or the like to facilitate passage of surgical tools and/or implants through the sheath **220**. In another embodiment, the surgical tools and/or implants inserted into the sheath **220** are coated with a surfactant, hydrophilic hydrogel, or the like.

[**0216**] In accordance with one aspect of the embodiments described herein, there are provided twist drills that can be used to extend the working channel within the spine, such as, for example, a channel that extends cephalad from the anterior surface of the S1 vertebral body.

[**0217**] With reference to FIG. **14**, there is provided a twist drill with handle **300**. that a configured as a twist drill **301** having a distal end **302** comprising a fluted section **306** with helical flutes **308** and a proximal end **304**, and a handle **310** engaged at the proximal end **304** of the twist drill **301**. The helical flutes **308** facilitate boring as the handle **310** is turned in the appropriate direction—here, clockwise to advance the twist drill **301** distally into the working channel.

[**0218**] The twist drill with handle **300** is typically fabricated from hardened stainless steel or the like. The length of the twist drill with handle **300** typically ranges from about 11" (275 mm) to about 13" 330 mm. In one embodiment, the twist drill with handle **300** is approximately 300 mm (12.00") long. The twist drill with handle **300** typically ranges in diameter from about 5 mm (0.20") to about 13 mm (0.50"). In one embodiment, the twist drill with handle **300** has a diameter of about 9 mm.

[**0219**] In one mode of use, the twist drill with handle **300** is used to extend the working channel in the spine to the treatment area (e.g., a disc space) after bone dilators are used to expand the diameter of the proximal portion or entry/targeted site **192** of the working channel.

[**0220**] In one exemplary method of use, where the targeted site **192** is the anterior surface of a sacral vertebral body and where the dermal entry site is near the paracoccygeal region, a twist drill with handle **300** having an O.D. of about 9 mm and is inserted into the lumen at the proximal end **224** of the dilator sheaths **220** or **220'**, each of which is used as a protected portal to the sacrum. The twist drill with handle **300** is advanced by turning the handle **310** at the proximal end **304** of the twist drill **301** so that the helical flutes **308** at the distal end **302** of the twist drill **301** progressively bore into and penetrate through the superior S1 bone end plate and into the L5-S1 disc space. Following nucleectomy and preparation of the disc space by means of the cutters and tissue extraction tools and methods described below, the twist drill with handle **300** can again be used to penetrate the L5 inferior bone end plate and vertebral body, prior to the removal of the dilator sheath **220** or **220'**, using, for example, a 6 mm or a 7.5 mm twist drill with handle **300** as needed based on the patient's anatomy.

[**0221**] In one mode of use, the twist drill with handle **300** is used to drill about halfway into the depth of the L5 vertebral body in preparation for subsequent anchoring of implants, or through the vertebral body to gain axial access to more distal inter-vertebral disc spaces, e.g., L4-L5, for therapeutic procedures.

[**0222**] In one embodiment, not illustrated, the twist drill unit comprises a bushing portion configured to compensate for the (mismatch) differences between the I.D. of the dilator sheath **220** or **220**∝ and the O.D. of the twist drill with handle **300**, thereby precluding "wobble" in the disc space en route to the L5 target, and thus enabling on-center axial alignment and use. The bushing portion is preferably located on the twist drill **301** near the proximal end **304** that is sufficiently distant from the distal end **302** so that it remains within the confines of the dilator sheath **220** or **220'** during operation of the tool for its intended purpose. In one embodiment, the bushing portion is made from a polymer, such as, for example, Delrin™, PTFE, PVDF, or the like. In a preferred embodiment the bushing is integral with the twist drill **301**, i.e., formed from the same rod blank.

[**0223**] On advantage of the present embodiment is that the twist drill configuration, mode of delivery, and use at the target site are no longer dependent on electrical or motorized drilling, thereby eliminating the risks of tissue damage associated with electric drill slippage and recoil.

[0224] In accordance with one aspect of the embodiments described herein, there are provided nucleectomy and cutting tools and techniques having advantages over conventional cutting tools and techniques. Certain conventional procedures rely on brute force to scrape, tear or break away the material. For example, rongeurs, or "pliers-like" devices, are often utilized to reach in through an access hole cut into the annulus, grab an amount of nucleus tissue and then to rip it out. In another example, curettes or various flat blades with sharpened edges are inserted and scrapped against the bone in an attempt to separate the nucleus from the bone. Another conventional approach involves using enzymes, such as, for example, chemopapain, to chemically dissolve or break-down the nuclear tissue. Such conventional approaches and techniques are often inexact, incomplete and potentially dangerous to the patient. Often the extent of the surgical exposure, and therefore the resulting trauma, is dictated by the nucleus removal procedure and not the subsequent fusion or repair procedure, which is the true end goal of the procedure. In contrast to the conventional techniques, methods, and instrumentation described above, the apparatuses and methods described herein are not reliant on the application of strength and high forces and are designed be more effective in complete removal of tissue and clean preparation of any bone surfaces.

[0225] Co-pending U.S. patent application Ser. No. 10/853,476, filed May 25, 2004, teaches various types of instrumentation and techniques for the removal of tissues and preparation of treatment sites in the spine, such as, for example, inter-vertebral motion segments located within the lumbar and sacral regions.

[0226] With respect to the present invention, it is anticipated that one or more nucleectomies can be performed extending into successively cephalad intervertebral disc spaces. For example, a disc recess **354'** is depicted in disc L4-L5 A wide variety of cutter blade and edge configurations as bore enlarging means can be employed to perform nucleectomies of the L5-S1 **354**, and L4-L5 **354'** disc spaces, wherein the cutter means are delivered and operated through the anterior TASII axial bore(s). Certain of these methods are described in further detail in U.S. patent application Ser. No. 09/710,369, the content of which is incorporated in its entirety into this disclosure by reference.

[0227] Co-pending U.S. patent application Ser. No. 09/782,534, filed on Feb. 13, 2001, teaches various types of techniques for using cutting tools for removing disc material and preparation of spinal treatment sites that comprise a spinal disc, for example, a method of removing at least a portion of the nucleus through a TASII axial bore while leaving the annulus AF intact.

[0228] Referring to FIG. **15**, a nucleectomy instrument **400** is inserted through the axially aligned anterior tract **372** defined by the lumen of the dilator sheath **220** and the TASII axial bore **370**. The nucleectomy instrument **400** comprises a cutting blade (e.g., cutter blade **453** which refers collectively to any blade configuration) which is remotely manipulatable, i.e., a retracted cutter blade **453** is first advanced through the TASII axial bore **370** and then extended laterally into the nucleus of the spinal disc. More specifically, the cutting blade **453** is mounted into an extendible or steerable distal end section **382** of nucleectomy instrument, i.e. cutter assembly **400** extending through the TASII axial bore **370** and anterior tract **372**.

[0229] The cutter assembly **400**, cutter blade **454** and cutter assembly shaft **410** are shown schematically in FIGS. **16-18** and not necessarily to scale to one another or to the TASII axial bore **370**.

[0230] In accordance with one aspect of the embodiments described herein, there are provided surgical cutters that can be used to perform nucleectomy via insertion into a disc space to excise, fragment and otherwise loosen nucleus pulposus and cartilage from endplates from within the disc cavity and from inferior and superior bone end plate surfaces. The cutters described herein represent a significant advance to current clinical techniques for access and preparation of intervertebral bodies for the subsequent insertion of therapeutic devices, such as prosthetic nucleus and fusion implants, and in particular for axially aligned implants, or for insertion of therapeutic materials, e.g., for osteogenesis, spinal arthroplasty, or annuloplasty.

[0231] With reference to the exemplary embodiments of FIGS. **16**A-C, the cutter assembly **400** comprises: a cutter shaft **410** extending between a distal end **412** and a proximal end **414**; a cutter blade **453** at the distal end **412**; a handle **416** at the proximal end **414**; a cutter sheath **430** placed concentrically over the shaft **410**; and a shaft sleeve **418** at the distal end **412**.

[0232] It will be understood, however, that the cutter components and structures described herein are suitable for the assembly and application of cutter assemblies that comprise, for example, up-cutters **452**, debulkers **450**, down-cutters **454**, or the like, or variations thereof. In FIGS. **16**A-**16**E, the cutter comprises a down-cutter **454**. In another embodiment, the cutter comprises an up-cutter **452** (see FIG. **16**H) In still another embodiment, the cutter comprises a debulker **450** (see FIGS. **17**A-E). These and other types of cutters are described in further detail below, with reference to preferred embodiments which comprise teardrop-shaped cutter blades **460**, **460'**, **490**, **490'**, **490"** shown in FIGS. **18**A-**18**G.

[0233] With reference to the embodiments of FIGS. **16**C and **17**A, in assembling the cutter assembly **400**, the longitudinal portion **406** of the cutter blade (e.g., debulker **450**, up-cutter **452**, or down-cutter **454**) is placed into a slot **413** near the distal end **412** of the shaft **410**. In one embodiment, the cutter blade hole **407** is aligned with a strategically placed cutter shaft hole **411** within the shaft slot **413**.

[0234] The shaft slot **413** is dimensioned to accommodate a cutter blade **453** such as, for example, a debulker **450** (**17**A), an up-cutter **452**, a down-cutter **454** (**16**C), or the like, or variations thereof. The width of the slot **413** is approximately the same as the width of the longitudinal portion **406** of the cutter blade **453**. The curvature at the distal end of the slot **413** accommodates the curvature of the cutter blade **453** between the longitudinal portion **406** and the laterally extending portion of the blade arm **402** (which defines the reach or throw of the cutter blade **453**). The slot **413** provides torsional support to the cutter blade arm **402** while the curvature at the distal end of the slot **413** provides axial support to the cutter blade arm **402**, necessary, in conjunction with cutter blade edge geometries (described in detail below; see FIGS. **16**D-**6**H and **17**B-**17**E, and **18**A-**18**F) to the cutting effectiveness of the cutter blade **453**.

[0235] A shaft sleeve **418** may be placed over the assembly shown in FIGS. **16**C and **17**A comprising the shaft **410**

and the cutter blade **453**. The shaft sleeve **418** when pinned effectively serves to align and fix the shaft **410** and the longitudinal portion **406** of the cutter blade **453**. While any of variety of other fastening techniques may also be used, the preferred pin technique is described below.

[**0236**] In one embodiment, the shaft sleeve **418** comprises a strategically placed shaft sleeve hole **419** that aligns with the cutter shaft hole **411** of the shaft slot **413** and the cutter blade hole **407**. The sleeve **418** can be securedly fixed to the rest of the assembly by inserting a cross pin **409** through the shaft sleeve **418** and the longitudinal portion **406** of the cutter blade **453** into the shaft **410**. In one embodiment, the cross pin **409** that fixes the cutter blade **453** to the shaft **410** is approximately 0.06" in diameter. The rest of the assembly **400** components can be fixedly secured to each other using any known suitable fixation mechanisms, as described in further detail below.

[**0237**] With reference to an exemplary embodiment in FIGS. **16**D-E, the cutter blade **453** (as shown, a down-cutter **454**) comprises a blade arm **402** and a longitudinally-extending portion **406**. The blade arm **402** begins from the proximally-located, longitudinally-extending portion **406**, and extends laterally to comprise any number of suitable shapes or configurations, such as, for example, a "J" shape or "S" shape, as shown. It is understood that in the context of the present invention, configurations of the types as just described may comprise a plurality of cutter blade arms **402**. In a preferred embodiment, described in further detail below, the cutter blade **453** comprises a "teardrop" shape (**460**, **460'**, **490**, **490'**, **490"**) shown in FIGS. **18**A-**18**G.

[**0238**] The cutter blades **453** generally comprise at least one sharpened cutter blade edge **401** (collective). With reference to FIGS. **16**D-E, in one embodiment, the cutter blade arms **402** (collective) of the down-cutters **454** have three cutter blade edges **401** including cutter blade arms **402'** (proximal), and **402"** (distal) separated lateral bend **403**. In other words, the cutter blade edges may be continuous with each other around the lateral bend **403** or may be interrupted. The illustrated blade edges **401** are illustrated on a leading surface **405** of the cutter blade arm **402**. A trailing surface **415** is illustrated as a blunt side, without a sharpened cutter blade edge **401**. Since the cutter blade edges **401** are on the same (leading) edge or side of the cutter blade arms **402**, the cutter blade **454** is considered to be single-sided in this regard. In this embodiment, the single-sided cutter blade arms **402** cut when turned in a clockwise manner but do not cut when rotated in a counter-clockwise direction. The direction of the rotation (clockwise or counterclockwise) is determined from a perspective that is proximal relative to the distally-located cutter. In another embodiment, not illustrated, the cutter blade arms **402** have cutter blade edges **401** on both the leading surface **405** and trailing surface **415** of the cutter blade arms **402**, so that cutting can be accomplished with this double-sided cutter blade arms **402** by means of either clockwise or counterclockwise rotation.

[**0239**] As will be described in further detail below, all of the cutter blade edges **401** disclosed herein may be optimally configured for preparing an intervertebral motion segment for either a subsequent fusion procedure or a subsequent procedure in which mobility of the intervertebral motion is to be preserved. More specifically, for nucleectomies preceding fusion procedures, cutter blade edges **401**—regardless of cutter blade arm **402** configuration—will contact the spinal disc inferior or superior endplates, while for mobility procedures, the cutter blade edges **401** will be spaced apart from the spinal disc endplates.

[**0240**] As an example, referring to FIG. **16**G, there is illustrated a cross-sectional view through cutter blade arm **402** of the cutter blade **454** illustrated in FIG. **16**E. In that illustrated embodiment, a leading side **405** is provided with a sharpened edge **420** fabricated by means of cutting, grinding or other manufacturing technique. The sharpened edge **420** is formed at the intersection of the declined face **421** and the surface **424** of the cutter blade arm **402'** and **402"**. This cutter blade **454** configuration is optimized for use against an inferior endplate in preparation for a fusion procedure. When the proximal surface **424** is placed in contact with an inferior endplate of a spinal disc and rotated in a clockwise direction, the sharpened edge **420** on leading surface **405** will scrape against said endplate. This can be used to scrape away the cartilaginous endplate and roughen the vascularized vertebral body so as to cause bleeding, which is desirable in order to facilitate bone growth and achieve fusion of the vertebral bodies that are superior and inferior to the spinal disc being treated

[**0241**] However, in a procedure to prepare the nucleus space for implantation of a mobility preserving device, roughening the endplate of the spinal disc may be undesirable. As shown in FIG. **16**F, for this procedure, the sharpened edge **420'** is desirably positioned at the intersection of the inclined face **421** and the surface **424**, such as by mirroring the angle of inclination of the declined face **421**. In this configuration, the sharpened edge **420'** will be spaced apart from the inferior endplate of the spinal disc by a distance which is equal to the thickness of the proximal cutter blade arm **402'**, thereby minimizing the chance of the bone bleeding, that would promote unwanted fusion.

[**0242**] With respect to the cutter arm blade **402**, the mirrored blade of proximal cutter blade arm **402'** is shown in FIG. **16**F and FIG. **16**G as distal cutter blade arm **402"**.

[**0243**] A sharpened edge (not shown) may alternatively be positioned partway between the proximal surface **422** and the distal surface **424**, such as providing a first and second inclined face on the leading surface **405**, which intersect at a sharpened edge **420**. In the atraumatic cutter design, intended for use in preparation for a procedure which preserves mobility, the sharpened edge **420** is preferably spaced apart from the surface of the cutter adapted for sliding contact with a boney end plate. Although the sharpened edge **420** may optimally be spaced apart from the bone contacting surface by the full thickness of the cutter blade, as discussed above, a sharpened edge **420** may be positioned in-between the proximal surface **422** and the distal surface **424** by a sufficient distance to prevent injury to the bone. The distal and proximal orientation of the sharpened edge **420** described above may be mirrored on a given cutter blade, depending upon whether the cutter is intended to be placed in sliding contact with an inferior or superior spinal disc endplate, as will be apparent to those of skill in the art in view of the disclosure herein. Again, the foregoing sharpened edge orientation may be applied to any of the cutter configurations disclosed herein.

[**0244**] In one embodiment, shown in FIG. **16**H, the cutter of the assembly **400** comprises an up-cutter blade **452**. As

with the above-described down-cutter blade **454**, the up-cutter blade **452** generally comprises a cutter blade arm **402** and a longitudinally extending base portion **406**. The cutter blade arm **402** begins from a proximally located, longitudinally extending base portion **406** that extends generally distally and inclines laterally outwardly to a radial limit **404**. The arm **402** curves to form a proximally facing concavity with a distal limit. The cutter may comprise any number of suitable shapes or configurations, such as, for example, a "J" or question mark shape. In another embodiment, described below, the cutter comprises a "teardrop" shape.

[**0245**] With reference to the embodiments shown in FIGS. **16**D-H, the down-cutters **454** and up-cutters **452** have single-sided blade arms **402** that are bent at an angle from between about 40 degrees to about 140 degrees relative to the longitudinally extending portion **406**. The blade arms **402** can optionally be canted between about 5 to about 25 degrees, preferably about 15 degrees, so that the cutting edge is rotated radially outwardly relative to the trailing edge. The blades arms **402** of the up-cutters **452** and down-cutters **454** are preferably angled vertically steeper relative to the longitudinal axes of the shafts to which they are affixed, as compared to those of debulkers **450**, described in further detail below.

[**0246**] The tilt of the blade arm **402** in the proximal direction in FIGS. **16**D, **16**E and **16**H is configured to allow for maximum engagement of the blade cutting edge with the distally facing surface of the bone end plate, while severing nucleus material. Thus, for an up-cutter **452**, an angle less than about 90 degrees relative to the axis of the shaft **410** generally would not enable adequate engagement of the blade cutting edge(s) **401** with the superior bone end plate. For a down-cutter **454**, an angle greater than about 90 degrees relative to the axis of the shaft **410** generally would not facilitate adequate engagement of the blade cutting edge with the inferior bone end plate, and a blade arm **402** at about a 40 degree angle of tilt of the blade arm **402** operates preferably (is "vertically steeper") than one at 70 degrees.

[**0247**] The "throw" i.e., the reach of the blade arm **402** is measured from the central longitudinal axis of the cutter shaft **410** radially outward to its radial limit **404** (FIG. **16**H). In other words, blade arm throw as used herein refers to the radius of the circle cut by a full revolution of the blade arm.

[**0248**] For up-cutters **452** and down-cutters **454**, the blade arm **402** throw are generally within the range of from about 6 mm to about 18 mm. In one embodiment, the blade arm throw of the cutters **452**, **454** are about 12 mm.

[**0249**] In accordance with one aspect of the embodiments described herein, the cutter blade of the assembly **400** comprises a debulker **450** Up-cutters **452** and down-cutters **454**, as illustrated in FIGS. **16**D, **16**E and **16**H may not be ideal initiators of nucleus tissue fragmentation. For one, their blade arms **402** and cutting edges **401** do not easily bend or sweep without space, particularly in terms of angles, having first been created by one or more debulkers **450**.

[**0250**] With reference to FIGS. **17**B-E, a debulker **450** comprises a cutter blade arm **402** that begins from a proximally-located, longitudinally-extending base portion **406** and extends laterally to comprise any number of suitable shapes or configurations, such as, for example, a "J" or "U" shape, as shown.

[**0251**] In one embodiment, the debulker **450** comprises a shorter throw than the cutter blade **454**, which allows debulkers **450** to retain their shape better than cutters with longer arms upon initial entry into the disc space, providing improved engagement of effective cutting edge surface with nucleus material. FIGS. **17**B-C illustrated one embodiment of a relatively smaller sized debulker **450**. FIGS. **17**D-E show one embodiment of a debulker **450'** having a greater cutting radius.

[**0252**] In one embodiment, the blade arm **402** configuration of a debulker **450** resembles a "J" in shape. The functional advantage of such blade vertical elements in the "J" shape is the increased efficiency of cutting per unit of throw or the increased cutting edge surface contact with the material to be fragmented.

[**0253**] In the embodiments of FIGS. **17**B-C and **17**D-E, the debulkers **450**, **450'** have single-sided blades (i.e., cutter blade edges **401** on one of the cutter lateral sides). In another embodiment, not illustrated, the debulkers **450** have double-sided blades (i.e., blade edges on both of the cutter lateral edges), which enables bi-directional cutting when the cutter handle **416** is manipulated to rotate the blade arm **402**.

[**0254**] In one mode of operation, debulkers **500** with shorter arm lengths, and hence shorter "throws" in terms of circumferential cutting diameter, are first introduced through the large dilator sheath **220** into the disc space and used to fragment the tissue within the disc space. In one mode of operation, one or more down-cutters, up-cutters, or the like, or variations thereof are used to further fragment the tissue within the disc space.

[**0255**] In accordance with one aspect of the embodiments described herein, there are provided cutters that comprise a closed loop such as a "teardrop" shape configuration, which provides more cutter rigidity and reduces the risk of fracture of the cutters during use (e.g., when a leading cutting edge of the cutter becomes embedded in bone during use). It will be understood that the any of the cutters (e.g., down-cutters, up-cutters, debulkers) described herein can comprise a "teardrop" or other closed loop shape.

[**0256**] Cutters (e.g., debulkers, up-cutters, down-cutters, etc.) that comprise a closed loop generally provide a more robust and overall more efficient cutting device that can be used for any number of surgical procedures, such as, for example, nucleectomy. Closed loop cutters may have a variety of advantages over cutters having only a single attachment point to the rotatable support. For example, in one embodiment, the closed loop shape allows for two fully supported cutting edges (e.g., top and bottom) on any given lateral side of the cutter. The closed loop shape also allows for side or end edges in the curve where the blade or cutter arm doubles back on itself.

[**0257**] With reference to embodiment shown in FIGS. **18**A-B, there is provided a standard size closed loop debulker **460**. In the illustrated embodiment, the cutter arm **462** of the closed loop debulker **460** doubles back upon itself to form a distal segment **470** and a proximal segment **468**. Both the distal segment **470** and proximal segment **468** are secured to the rotatable shaft **410**, resulting in the distribution of any stress in the arm **462** over two segments rather than over a single segment arm. The distributed stress can result from the torque of turning the shaft **410** or the resistance of the disc material on the blade(s) **461**.

[0258] The arm **462** of the closed loop cutter begins from a proximally located end **480**, extends distally to provide an attachment surface and then laterally outward to form the lower segment **468**. The arm **462** then doubles back at juncture **482**, the location of which defines the cutting radius. The arm **462** then extends laterally inward, turns, and then proximally toward proximal end **484**, to provide an attachment surface. The proximal and distal segments **468**, **470** each comprise a sharp edge **461**.

[0259] The distal segment **470** comprises an attachment structure such as a slot **472** near the proximally located end **484**. The lower segment **468** also comprises an attachment structure such as a cutter blade hole **467** near the proximally located end **480**. The shaft slot **472** enables end **470** to slide relative to the cross pin **409** during extension and retraction of the cutter blade (e.g., **460** or **490**) of the assembly **400**.

[0260] With reference to the embodiment shown in FIGS. **18**C-D, there is provided a large teardrop shaped debulker **460'**, having a longer laterally extending portion and longer blades **461'**, relative to the debulker **460** of FIGS. **18**A-B. A longer teardrop configuration generally allows for further reach than smaller ones. In general, the cutter blades **460**, **460'**, **490**, **490'** of FIG. **18**A-FIG. **18**D, when rotated through a complete revolution will cut a transversely circular cavity having a diameter within the range of from about 10 mm to about 30 mm,

[0261] In each of the closed loop cutters illustrated in FIGS. **18**A through **18**D, the proximal segment **468**, **468'** and distal segment **470**, **470'** extend radially outwardly from the axis of rotation generally in parallel with each other. However, alternative configurations may also be used, such as by imparting curvature to one or both of the proximal segment **468** and distal segment **470**. One or both of the segments may be provided with a curve having a concavity facing in the distal direction; a concavity facing in the proximal direction, or concavities opposite to each other, depending upon the desired clinical result. In addition, in the illustrated embodiments, the cutter blade arm **462** formed by the proximal segment **468** and distal segment **470** extends radially outwardly at approximately a 90 degree angle from the longitudinal axis of the rotatable shaft **410**. The cutter blade arm **462** may alternatively be inclined in either a proximal or distal direction (not shown) depending upon the desired performance, and, for example, whether the cutter is intended to operate against an inferior or superior spinal disc endplate. For example, the cutter blade arm **462** may incline in a distal direction or a proximal direction by as much as 45 degrees away from the perpendicular

[0262] With reference to the embodiments shown in FIGS. **18**E, **18**F, and **18**G, there are provided teardrop shaped down-cutters **490**, **490'**, **490"** having large, medium, and small sizes, respectively. The length of the teardrop shaped cutters varies in the range between about 0.25" to about 1.00". These arcuate cutters can extend linearly within a deployment sheath and "curve" as they are advanced distally out of the sheath into the disc space, instead of extending axially until fully deployed from the sheath and then "flopping over" which requires a lateral advance through the nucleus material as well as sufficient axial clearance to allow deployment within the disc. Due to the limited disc height in most fusion/mobility patients, the cutter preferably has a low profile during extension, use, and retraction. Straight bladed cutters will extend linearly in the axial direction of the deployment sheath during extension and long versions may actually hit the upper endplate, causing the cutter to get stuck or inhibiting complete deployment.

[0263] With reference to the exemplary embodiment of FIG. **18**E, the double-back structure of the teardrop down-cutter **490** begins from a proximally located end **480**, extends distally along the lower segment **468**, extends laterally outward and downward (i.e., proximally) to form a proximally facing concavity, along the lower segment **468**, doubles back at juncture **482**, extends laterally inward and upward (i.e., distally), and then extends proximally along the upper segment **470** toward proximally located end **484**. At least one and preferably both of lower and upper segments **468**, **470** comprise a blade **461**.

[0264] The upper segment **470** comprises a slot **472** near the proximally located end **484**. The lower segment **468** comprises a cutter blade hole (not shown) near the proximally located **480**. The shaft slot **472** enables end **484** to slide relative to the cross pin **409** during extension and retraction of the cutter blade (e.g., **490**, **490'**, **490"**) of the assembly **400**.

[0265] In the embodiments illustrated in FIGS. **18**E through **18**G, the separation distance between the first and second cutting edges is a controllable variable in manufactureine (e.g., predetermined during cutter blade formation, i.e., heat treatment of the pinned Nitinol shape memory alloy) and varies from about 2 mm to about 8 mm, and, often is about 3 mm to about 4 mm. The maximum separation **483** in the illustrated embodiment is located within about the radially outwardly most one third of the total blade length. Alternatively, the maximum separation **483** may be positioned within the radially inwardly most third of the blade length, or within a central region of the blade length, depending upon the desired deployment and cutting characteristics.

[0266] In accordance with one aspect of the embodiments described herein, the blade arms **402** and the cutter blades **453** in general can be formed from strip material that is preferably a shape memory alloy in its austenitic phase at room and body temperature and that ranges in width from about 0.10-0.20" and in thickness from about 0.015-0.050". Blade arms **402** formed in accordance with the present embodiment are generally able to be flexed in excess of 100 cycles without significant shape loss, and twisted more than 1 and ½ full turns (about 540 degrees) without breakage.

[0267] In one embodiment, the cutting blade **453** and cutter blade edge **401** is formed from a super-elastic, shape memory metal alloy that preferably exhibits biocompatibility and substantial shape recovery when strained to 12%. One known suitable material that approximates the preferred biomechanical specifications for cutter blades **453** and cutter blade edges **401** and blade arms **402** is an alloy of nickel and titanium (e.g., Ni_{56}-Ti_{45} and other alloying elements, by weight), such as, for example, Nitinol strip material #SE508, available from Nitinol Devices and Components, Inc. in Fremont, Calif. This material exhibits substantially full shape recovery (i.e., recovered elongation when strained from about 6%-10%, which is a factor of ten better than the recovered elongation at these strain levels of stainless steel).

[0268] The shape and length of the formed cutter blade **453** in general varies for the different cutting modes. The

shape memory material can be formed into the desired cutter blade **453** configuration by means of pinning alloy material to a special forming fixture, followed by a heat-set, time-temperature process, as follows: placing the Nitinol strip (with the blade's cutting edge(s) **401** already ground) into the forming fixture and secured with bolts; and placing the entire fixture into the oven at a temperature ranging from about 500° C. to about 550° C. (e.g., where optimum temperature for one fixture is about 525° C.) for a time ranging from between about 15 to about 40 minutes (e.g., where the optimum time for one fixture is about 20 minutes). Flexible cutter blades formed from Nitinol in this manner are particularly suited for retraction into a shaft sleeve, and are able to be extended to a right angle into the disc space. Moreover, they are able to mechanically withstand a large number of cutting "cycles" before failure would occur.

[**0269**] The cutting blade edges **401** are preferably ground with accuracy and reproducibly. The angle of the inclined surface (e.g., **421**, **421'**, **461**, **461'**. **461"**) of the blade relative to the blades's flat side surface typically ranges from about 5 degrees to about 60 degrees, often about 20 degrees to about 40 degrees. In one embodiment, the blade angle is approximately 30 degrees relative to the blade's side surface.

[**0270**] In one embodiment, the shaft **410** of the assembly **400** is formed from solid stainless steel or other known suitable material. In one embodiment, the shaft has a diameter of approximately 0.25" (6.3 mm). The shaft sleeve **418** may be formed from stainless steel tubing or other known suitable material tubing, and has a length of about 0.7".

[**0271**] The cutter sheath **430** can be fabricated from polymeric material, stainless steel, or other metal tubing. The sheath **430** typically has an outer diameter (O.D.) of about 0.31" (7 mm) to about 0.35" (9 mm). With reference to FIG. **16**I, in a preferred embodiment, the sheath **430** is configured with a shoulder **499** bored into its inner wall which serves as a stop that precludes the shaft **410**, along with its attached blade arm **402** and handle **416**, from becoming fully disengaged from the cutter sheath **430** when the blade arm **402** is retracted into the sheath **430**. When retracted proximally, the proximal end of the shaft sleeve **418** bumps into the shoulder **499**, thereby preventing the shaft **410** from being fully disengaged from the sheath **430**. It will be understood that one or more analogous shoulder structures can be implemented in any of the tools described herein, such as, for example, the sheaths used with the tissue extractors, etc.

[**0272**] In accordance with one aspect of the embodiments described herein, there is provided a handle configured as a lever which is affixed to the proximal end of the cutter shaft. Referring to FIGS. **16**A-B, the illustrated handle **416** is affixed to the proximal end **414** of the cutter shaft by means of a cross-pin set screw **415**, which reduces the risk of handle **416** disengagement from the cutter shaft **410** (e.g., unthreading by rotational manipulation during cutting). The handle **416** is preferably affixed so that it is in rotational positional alignment with the blade arm **402** and serves as a reference marker for the blade arm's in situ orientation.

[**0273**] In one embodiment, the handle **416** of the cutter assembly **400** is configured as a turn knob fabricated from a polymeric material, such as, for example, ABS polymer or the like, that is injection moldable and that may be machined, and is affixed to the cutter shaft **410** by means of threaded or other engagement to the cutter shaft proximal end **414**.

[**0274**] The handle **416** may serve as a stop against which the proximal end of the cutter sheath **430** abuts, thereby maintaining the engagement of the shaft **410** and cutter sheath **430**, when the blade arm **402** is extended distally and is exposed from the distal end of the cutter tube lumen, for example, as a result of having pushed on the handle **416** to advance the shaft **410** distally to expose the cutter blade **453** and cutter blade edge **401**.

[**0275**] Due to the inevitable accumulation of severed tissue on and within the debulker **250** and other cutter assembly components (e.g., up-cutters **452**, down-cutters **454**, etc.), it is preferred that they be disposable. In accordance with one aspect of the embodiments described herein, there are provided cutter assembly components that are disposable. Two or three or four our more of any of these components may be provided in a kit, enabling the clinician to dispose of one as desired and to introduce a new one into the procedure.

[**0276**] In accordance with one aspect of the embodiments described herein, there are provided blade arms and cutters that are designed to be rotated and used in one direction (i.e., clockwise or counter-clockwise). In one aspect, for the single-sided cutter blades **450** illustrated in FIGS. **17**B-C, rotational motion of blade arms **402** in only one direction (e.g., clockwise) will initiate severing of nucleus material (see also up-cutters **452** and down-cutters **454** described herein). The intended motion during the use of these blades **401** is similar to the back and forth motion of a windshield wiper—wherein the excision with respect to these cutters occurs in the sweep that is clockwise in direction.

[**0277**] In one embodiment (not shown), one or more stops are placed within the cutter shaft **410** to control blade arc or range of motion. In another embodiment (not shown), one or more stops are fitted onto the dilator sheath **220** to control the blade arc or range of motion.

[**0278**] The shaft **410**, cutter sheath **430** and the handle **416** components are preferably co-configured to enable the cutter blade arm **402** and the shaft **410** to which it is attached be able to be "pushed-pulled" so as to retract the blade arm **402** into and extended the blade arm **402** from the lumen **434** at the distal end **432** of the cutter guide tube **430**, as needed. More specifically, the cutter blade edges(s) **401** of the cutter blade **453** are retracted into the cutter sheath **430** for delivery into the disc space. Once the sheath **430** is in position, the cutter blade edges (s) **401** are extended distally and rotated using the handle **416** to cut nucleus material. The cutter blade edge(s) **401** are again retracted into the cutter sheath **430** for removal of the cutter assembly unit **400** from the spine.

[**0279**] In one mode of use, particularly suitable for performing a nucleectomy of the L5-S1 intervertebral disc space, a series of cutting tools comprising debulkers, up-cutters, and/or down-cutters are used to separate disc material (e.g., nucleus pulposus and cartilage from within the disc space).

[**0280**] In one embodiment, the terms "debulking", "up-cutting", and "down-cutting" refer to the blade arms configurations that are used in a sequential and progressive

fragmentation of the core nucleus pulposus within the central or core portion of the disc, the surface of the superior bone end plate, and the surface of the inferior bone end plate, respectively.

[0281] In one method of use, one or more debulkers **450**, with blade arm lengths successively increasing from about 8 mm to about 15 mm, are used in the initial steps of performing nucleectomy. In one mode of operation, three debulkers—namely, a small debulker $\mathbf{450}_S$, a medium debulker $\mathbf{450}_M$, and a large debulker $\mathbf{450}_L$—having blade arm lengths of about 8 mm, 11 m, and 15 mm, respectively, are used prior to introduction of the cutters (e.g., up-cutters **452** and/or down-cutters **454**).

[0282] In accordance with one aspect of the embodiments described herein, there are provided cutter configurations that advantageously enable the surgeon to have more precision and control with respect to the excision of nucleus material from the endplates. Some level of bone bleeding is generally associated with decortication (i.e., the scraping of the cutters against the surfaces of the end plates). Such bleeding can advantageously promote bone healing and/or osteogenesis in the normally a vascular area of the disc. This is particularly advantageous when the disc space is being prepared for subsequent procedures or implants where there is a need for accompanying bone growth. The cutter configurations and techniques of the present invention assist the surgeon in achieving an appropriate amount of bleeding in a controlled manner which does not otherwise compromise the bone endplate or adjacent structures.

[0283] In accordance with one aspect of the embodiments described herein, there are provided extraction tools for extracting tissue fragments from a treatment site, such as, for example, a disc space. While the extraction tools and devices are described in the context of their application to the removal of nucleus pulposus and cartilage material excised from the a spinal disc via axial access to a disc space, it will be understood that they can be used to remove other tissue fragments from the same or different treatment sites, or for lateral access into a disc space as well.

[0284] The extractor devices include configurations that can be inserted into the disc space through an axial approach to the lumbar spine. Such configurations include, but are not limited to, "wheel", "end" or "bottle" multifilament configurations. At the same time, the tools should be small enough to allow atraumatic entry into the disc via a cannulae (e.g., the large dilator sheath). The extractor tools are generally used to remove tissue fragments in the treatment site by snagging and pulling them out.

[0285] With reference to the embodiment of FIGS. **19**A-D, there is provided a retractable tissue extractor **500** comprising an elongate extractor shaft **512** that extends between a distal end **514** and a proximal end **516**. The extractor **500** preferably comprises a delivery sheath **520** that extends between a distal end **522** and a proximal end **524**.

[0286] The extractor **500** comprises an extractor head **509** engaged with the distal end **514** and a handle **518** affixed to the proximal end **516**. The extractor head **509** may be glued and pinned into or otherwise attached to the distally located receiving section of the extraction tool **500**. The extractor handle **518** may be configured, constructed, and affixed to the extractor shaft in accordance with substantially the same means and materials as previously described and disclosed herein for cutter handles.

[0287] The extractor assembly **500** of FIGS. **19**A-D is shown in its "pre-splayed" state, which refers to a first configuration or first, reduced cross sectional profile in which the filaments or wires **530** of the extractor head **509** on the distal end of extractor assembly **500** are in a reduced cross sectional orientation, to facilitate assembly into the shaft **512**. In one aspect, the "pre-splayed" individual wires or filaments **530** of extractor head **509** are comprised as part of a multi-filler and/or multi-layer wound coil. The windings of the layers can be left-handed and/or right-handed, although it is preferred that all layers be wound in the same direction, and that a wound configuration for the individual filaments is preferable to a straight-filament configuration in order to assure that the filaments **530** will retain a helical or coiled configuration when unwound.

[0288] In the context of the present invention, as used herein the terms spiral, helical, or kinked refer to the fact that the filaments are not straight, and it is understood that they are not necessarily "uniformly" formed (e.g., not as reproducibly spaced coils).

[0289] In one embodiment, the extractor head **509** may be formed from a cable that is wound as 4 concentrically coiled, multi-filler layers (e.g., 6, 7, 8, 9 filaments or fillers per layer) fabricated from the highest-tensile strength stainless steel wires commercially available. As will be described below, it is the combination of the tensile strength, diameter and helical or coiled configuration of the wires **530** when unraveled enable wire entanglement to effectively extract tissue fragments. The extractor head **509** is capable of being transformed from a first "pre-splayed" state (e.g., where the wires are wound together in a cable that has a bundle diameter of about 0.15") to a second, "splayed" state (i.e., a second, expanded cross sectional profile) by the unwinding of the wires **530** (e.g., stainless steel wires) with diameters of about 0.01".

[0290] With reference to FIG. **20**, there is provided one embodiment of the extractor assembly **500** (with the extractor head **509** in a splayed state) that can be used to remove entrapped tissue fragments **502** from the treatment site. As shown, the tissue fragments **502** are entangled in the inter-wire spaces of the multiple strands **530**.

[0291] In one embodiment, the extractor head **509**, once unraveled and splayed, the reach or total spread of the extraction filaments **530**, tip-to-tip is from about 0.50" to about 1.50". In a preferred embodiment, the reach of the extraction filaments **530** tip-to-tip is about 1.00".

[0292] The wires or filaments **530** are preferably stainless steel and of a diameter and tensile strengths, that enable retraction and delivery through the delivery sheath **520** without deforming extensively e.g., the individual filaments **530** retain their helical configuration and collectively maintain the radial reach of extractor head **509**. In alternative embodiments, the wires can comprise, nickel alloys, nickel-titanium alloys, cobalt alloys, or the like.

[0293] In one embodiment, shown in FIGS. **21**C-D, the helical wires **530** of the extractor head **509** are splayed in a non-uniform pattern, so that the wires **530** overlap with each other. The wires **530** are preferably sufficiently stiff to snag tissue fragments **502**, yet be pliable enough to compress and bend when tugged with tissue fragments **502** in tow. The mechanical properties, number, and spatial relationship

among of the wires **530** impact effective tissue extraction of tissue fragments **502** as will be explained below.

[**0294**] Tissue fragments **502** are captured by the extractor head **509** in part as a result of the wires' surface areas, in part due to their own (inter-wire) physical entanglement with a concomitant entrapment of additional material as the extractor tool **500** is manually rotated or twisted and the spatial orientation among wires **530** changes. The tips at the distal end of the wires **530** are also sharp to assist in snagging.

[**0295**] The wires **530**, however, are preferably not so stiff as to preclude deflection upon contact with stiffer/more solid elements other than fragmented and loosened tissue. The tissue extractor wires **530** are preferably soft enough to deform and conform to the irregularities of the bone surface and neither cut or erode other vertebral structures, such as bone or the annulus, so there is also no concomitant risk of further spine or spinal cord damage.

[**0296**] The density of wires **530** within the disc space is also a significant factor with respect to maximum tissue removal. When wire or bristle density (# wires per unit volume of disc space) is too high, the extractor head **509** tends to push material to the disc perimeter rather than collecting it. In one embodiment, the extractor head **509** comprises about 30 wires **530**, each with a diameter of about 0.010". The disc space is typically small, with a cavity volume of about 6-8 cc, so a density with too many wires **530** (e.g., 50 strands, each with a diameter of about 0.010"), precludes their optimum interaction in removing tissue fragment **502**. Extractor heads having at least about 5 to about 10, but often no more than about 40 or 50 strands, depending upon strand length and diameter, and desired clinical performance, are contemplated.

[**0297**] In one embodiment, the proximal end **534** of the wire cable comprising the extractor head **509** is brazed to the extractor shaft **512**, which is formed of stainless steel tubing. In another embodiment,(FIG. **19**B), the proximal end **534** of the extractor head **509** is affixed to the extractor shaft **512** by means of a pin **508**, as well as adhesively affixed. Any of a variety of other attachment techniques may also be used, such as gluing, crimping and various potting techniques. Alternatively, the extractor head **509** may be sufficiently axially enlongated to extend to the proximal end **516** of the extractor shaft **512**.

[**0298**] In one embodiment, the shaft **512** is formed from a solid polymer rod. Suitable rod materials include, but are not limited to, polymers which are machined and/or injection molded, and are able to be sterilized. Examples of such materials include acetal copolymer, acrylic, polyethylene, nylon, polycarbonate, polypropylene, PVC, ABS, or the like.

[**0299**] In one embodiment, the extractor shaft **512** is about 0.25" in diameter and is approximately 12.00" in length. As previously noted, the extractor assembly **500** should be small enough to allow atraumatic entry into the disc via a cannulae (e.g., the large dilator sheath **220**).

[**0300**] In one embodiment, the extractor sheath **520** is formed from stainless steel tubing with an I.D. of about 0.26" and an O.D. of about 0.35".

[**0301**] With reference to FIGS. **19**A-**19** C, the extractor shaft **512** also may comprise a handle **518** that is affixed to its proximal end **516**, to facilitate manipulation of the tool when removing tissue, and also to enable extension and retraction of the extractor head **509** as noted and described elsewhere. In order to prevent over-extension and over-retraction the extractor assembly **500** comprises stop means. One such stop means is shown in FIG. **19**A, comprising a stop pin **515** and a slot **562**. The stop pin **515** is affixed to the shaft **512** and configured to extend through slot **526** in the extractor sheath **520**. The length of the slot **526** limits the travel of the pin and in turn the shaft **512**, limiting extension and retraction of the shaft **512** and thus the extractor head **509**. In one embodiment, the handle **518**, which is of larger diameter then the extractor sheath **520**, serves as an extension stop. More specifically, distance between the proximal end **524** of the sheath **520** and the distal end of the handle **518** controls the amount of exposure of the extractor head **509**. A longer distance between end **524** and the handle **518** will result in an extractor **500** with a shaft **512** that can be distally advanced a longer distance, thereby resulting in increased exposure of the extractor head **509**.

[**0302**] With reference to FIG. **16** I, as was previously described with respect to the cutter sheath **430**, in a preferred embodiment, the extractor sheath **520** is configured with a shoulder **499** bored into its inner wall which serves as a stop that precludes the shaft **512**, along with its extractor head **509** and handle **518**, from becoming fully disengaged from the extractor sheath **520** when the extractor head **509** is retracted into the extractor sheath **520**.

[**0303**] With reference to FIGS. **22**A-B, in another aspect, the extractor head **509** comprises wires(s) **550** at least some of which, and in one embodiment all of which, are configured with hooks **558** on the distal ends **554** of the strands **550**, for extracting tissue. The wires **550** are constructed from a metal such as stainless steel with a wire strand diameter from about 0.004" to about 0.020". Again, for the extended extractor head **509**, the reach or total spread of the hooked wires **550**, tip-to-tip is from about 0.50" to about 1.50". In a preferred embodiment, the reach of the extraction filaments **530** tip-to-tip is about 1.00".

[**0304**] The extractor head **509** comprising the hooked wires **550** is affixed to the extractor shaft **512** in substantially the same manner as previously described, above. In this embodiment as just described it is the hooked configuration of the wires **550** which extract tissue fragments **502** as opposed to the entanglement among individual wires with respect to the preferred kinked fimaments **530**. The hooked wires **550** are configured so as not to excise, abrade, or otherwise compromise adjacent structures (e.g., the annulus).

[**0305**] Extractor heads **509** configured according to the embodiment of FIGS. **22**A-B can snag material for removal with a lower strand density (i.e., number of strands per unit volume of disc space). In one approach, as few as two strands can be used operatively. Again, if the density of strands **550** is too high, the extractor head **509** tends to push tissue fragments **502** to the disc perimeter rather than collect it. In one embodiment, the head comprises fewer than about 30 wires **550**.

[**0306**] With reference to FIGS. **19**A-D and **21**A-D, there is provided an extractor sheath **520** which restrains the extractor head **509** in the first, reduced configuration, which is retracted into or extended from the lumen at the distal end

522 of the extractor sheath **520** as the extractor assembly unit **500** is inserted or removed from the disc space, through the protected portal of the large dilator sheath **220**.

[**0307**] In one mode of use, the targeted tissue site comprises a disc space and the tissue fragments to be extracted comprise nucleus material. In one mode of use, the extractor **500** is used to remove nucleus material after tissue cutters (e.g., debulkers, down-cutters, up-cutters, etc.) have been used to loosen up nucleus material within the disc cavity and end plate surfaces. In another approach, extractors **500** are used concurrently with the tissue cutters. In one method of use, approximately five extractor assembly units **500** are utilized in each procedure (i.e., during the nucleectomy of one disc).

[**0308**] In one embodiment, the extractor assembly **500** is a disposable, one-time use unit. Here, each extractor head **510** is only inserted once, in situ, into a disc cavity.

[**0309**] In accordance with one aspect of the embodiments described herein, there are provided various material inserters than can be used to deliver any number of suitable materials to a treatment site.

[**0310**] In accordance with one aspect of the embodiments described herein, there is provided a bone graft insertion tool that can be used to insert and pack bone material or paste into the disc following nucleectomy.

[**0311**] With reference to FIGS. **23**A-D, in one embodiment, the bone graft inserter assembly (or bone growth material inserter) **600** comprises a packing instrument **602** and a delivery cannula **604**, as shown in FIGS. **23**C and **23**D.

[**0312**] Referring to FIG. **23**C, the packing instrument or packer **602** comprises a rod **610** that extends between a distal end **612** and a proximal end **614**. In one embodiment, the rod is made from stainless steel or the like. The rod **610** is configured to be inserted into a central lumen extending through the delivery cannula **604**. In one embodiment, the rod **610** has a diameter of about 0.156".

[**0313**] The packer **602** comprises an impactor mass such as a ball or handle **616** which may be attached to the proximal end **614**. In one embodiment, the impactor ball **616** is press fit to the proximal end **614**. The ball **616** is preferably solid and may be formed from a polymeric material, such as, for example, an acetal copolymer. In one embodiment, the ball **616** comprises a bore or aperture for receiving the proximal end **614** of the rod **610**. In one embodiment, this bore is about 0.15" in diameter and about 0.50" deep. In one embodiment, the diameter of the ball is about 1.00".

[**0314**] The illustrated packer **602** comprises a bushing **618** attached to the distal end **612**. In one embodiment, the bushing **618** is press fit to the distal end **612**. The bushing **618** may be a solid cylindrical structure and formed from a known suitable polymeric material. In one embodiment, the O.D. of the bushing **618** is about 0.29".

[**0315**] In one embodiment, the bushing **618** comprises one or more O-rings **619** which provides a tight sliding fit between the bushing **618** and the inside wall of the central lumen extending through the delivery cannula **604**, enabling insertion of bone growth facilitation materials which are less viscous, e.g., paste or liquid.

[**0316**] Referring to FIG. **23**D, the delivery cannula **604** comprises a tube **620** that extends between a distal end **622** and a proximal end **624**. In one embodiment, the tube **620** is machined from stainless steel tubing with an O.D. of about 0.31" and an I.D. of about 0.30".

[**0317**] The distal end **622** of the cannula **604** comprises a tip **626** that is preferably beveled at an angle to facilitate directional control of material as it is delivered into the treatment site, such as, for example, a disc space. In one embodiment, the tip **626** is beveled at an angle of approximately 45 degrees relative to the longitudinal axis of the cannula **604**.

[**0318**] The proximal end **624** of the cannula **604** comprises a funnel **628**. In one embodiment, the distal portion of the funnel **628** has an I.D. of about 0.30". The funnel increases in diameter toward its proximal end. In one embodiment, the funnel **628** is engaged with the tube **620** via brazing. In another embodiment the funnel **628** is engaged with the tube **620** by means of press fit. In one embodiment, the overall length of the tube **620** and funnel **628** is about 13.00". The funnel **628** may be fabricated from a polymeric material such as acetal copolymer.

[**0319**] In one mode of use, the cannula **604** is docked or otherwise secured to the entry to the treatment site. Bone paste or osteogenic material is inserted into the cannula **604** via the cannula tip **626** or by means of the funnel **628**. The packer **602** is inserted into the funnel **628** and advanced distally to push bone paste out of the cannula distal end **622** and into the treatment site (e.g., a disc space). In one embodiment, as the packing rod **610** is advanced distally into the cannula **604**, the impactor ball **616** hits the funnel **628** just as the bushing **618** reaches the distal end **622** of the cannula **604**.

[**0320**] In accordance with another aspect of the embodiments described herein, FIGS. **24**A-**24**B illustrate a bone paste inserter **640** comprising a cannulated tube **642** that extends between a distal end **644** and a proximal end **646**. The tube **642** defines an inner lumen **648**.

[**0321**] A preferred assembly **640** also comprises a distally-located threaded portion **650** that may be formed directly on the tube **642** or engaged to the distal end **644** via any known suitable attachment technique. The threaded portion **650** is configured to engage with the threaded proximal ends of implants (e.g., and axial fusion rod) to facilitate the delivery of bone paste into the treatment site. In another embodiment, the assembly **640** lacks a threaded portion **650**.

[**0322**] The assembly **640** also comprises a quick connect fitting such as a luer lock **652** at the proximal end **646**. In one embodiment, the luer lock **652** is a 10 gauge luer lock. The tube **642** and threaded portion **650** is typically machined from stainless steel or other suitable material known in the art.

[**0323**] In one mode of use, bone paste is delivered through the paste inserter assembly **640** beginning at the luer lock **652**, and through the tube **642**, and into the treatment site via distal end **644**.

[**0324**] In accordance with one aspect of the embodiments described herein, there is provided an allograft placement tool. With reference to FIGS. **25**A-C, in one embodiment, the allograft placement tool (or augmentation material

inserter) **950** comprises a cannulated tube **952** that extends between a distal end **954** and a proximal end **956**, and that defines an inner lumen **955**.

[**0325**] The tool **950** comprises an allograft delivery tip **958** attached to the distal end **954** via any known suitable attachment technique, such as, for example, press-fit, adhesive material, or the like. In one embodiment, the tip **958** is secured to the tube **952** with one or more pins **953** positioned within one or more transverse hole(s) on the tube **952** and into corresponding apertures **968** on the tip **958**. The tip **958** comprises a stop such as an annular flange structure **970** which abuts the distal end of the tube **952** and which supports the position of the allograft during insertion.

[**0326**] The tip **958** comprises a distal opening **960**, a proximal opening **962**, and an inner lumen **964** that is in communication with the tube lumen **955**. The tip **958** comprises threads **966** or other engagement structure to engage with the allograft being inserted into the treatment site.

[**0327**] It will be understood that any of the material inserters described herein can be used with any suitable material(s), depending on the particular type of treatment procedure and treatment site. For example, any one the material inserters described above (e.g., **600**, **640**, and **950**) can be used for the delivery of augmentation materials (e.g., a hydrogel) to a treatment site (e.g., a disc space), thereby making the material inserter an augmentation material inserter.

[**0328**] In accordance with one aspect of the embodiments described herein, there is provided an exchange system providing a protected portal to the treatment site (e.g., the sacrum) for the insertion of instrumentation or implants having O.D. dimensions (e.g., greater than about 0.35") that are too large to be accommodated through the working and docking portal provided by the large dilator sheath (e.g., sheath **220** described above).

[**0329**] With reference to FIGS. **26**-**27** and **28**A-B, in one embodiment, the exchange system assembly comprises an exchange bushing **702** and an exchange cannula **704**.

[**0330**] The shaped exchange bushing **702** extends between a distal end **710** and a proximal end **712**. The elongate, cannulated exchange bushing **702** is shaped and tapered toward its distal end **710**. In one embodiment, the bushing **702** is cannulated with a central lumen having an inner diameter of about 0.14" (i.e., slightly larger than a diameter of a typical guide pin). In one embodiment, the length of the bushing **702** is approximately 14.00".

[**0331**] Bushing **702** has a tapered tip **714** at its distal end **710**. In one embodiment, the tapered tip **714** starts at the inner diameter of the bushing **702** and continues at approximately an 18 degree angle for about 0.5" after which the taper cuts sharply back (i.e., flares out) towards the center of the bushing **702** and begins the taper again at about an 18 degree angle out to the outer diameter of the bushing **702**. This creates an annular recess region in which the exchange fingers **724** of the cannula **704** can nest, thereby providing a protected profile during delivery (i.e., the bushing **702** protects the exchange fingers **724**) See FIG. **27**. Delivery may be accomplished over an extended guide pin.

[**0332**] In one embodiment, the exchange bushing **702** comprises a polymeric material, such as an acetal copolymer or the like. In another embodiment the exchange bushing **702** is fabricated from a metal or metal alloy, e.g., stainless steel. The exchange bushing **702** can be either machined or injection molded.

[**0333**] With reference to the embodiments in FIGS. **27** and **28**A-B, there is provided an exchange system that comprises a "fingered" exchange cannula **704**, which works in combination with the bushing **702**. The exchange cannula **704** extends between a distal end **720** and a proximal end **722** and defines an inner lumen **728**.

[**0334**] The exchange cannula **704** comprises a plurality of distally extending "fingers"**724** at the distal end **720** that are generally triangular in shape. FIG. **28**A shows the exchange cannula **704** in the "open" position with its fingers **724** extended radially outward compared to the "closed" position. FIG. **28**B shows the exchange cannula **704** in the "closed" or insertion position with its fingers **724** congregated about a central axis, thereby forming a conical tip **726**. The conical tip **726** is designed to enter the sacral bore, and to hold dilation and position intact during subsequent deployment of instrumentation or implants.

[**0335**] In one embodiment, the exchange cannula **704** is formed from polymeric tubing (e.g., such as acetal copolymer) In one embodiment, the cannula **704** is about 8.00" in length, and comprises from 3 to 8 "fingers"**724** at the distal end **720** that are approximately triangular in shape. Here, the fingers **724** are approximately 1.00" in length and configured so as to collapse towards the longitudinal axis of the cannula at approximately a 30 degree angle.

[**0336**] In one mode of use, the exchange cannula **704** is seated on the outside of the shaped exchange bushing **702** during insertion into the sacrum following removal of the large dilator sheath **220** (i.e., working cannula that was used for cutting and extraction). Once the shaped exchange bushing **702** is seated in the sacrum, the exchange cannula **704** is advanced distally and into place. The fingers **724** of the exchange cannula **704** slip into the hole or entry point leading to the treatment site, and the shaped exchange bushing **702** is withdrawn enabling the insertion of subsequent instrumentation or other devices and implants through the lumen **728** of the exchange cannula **704** and into the treatment site. In one approach, the subsequent instruments can optionally be advanced through the cannula **704** in combination with a guide pin.

[**0337**] With reference to FIGS. **29**A-B, the largest O.D. of the to-be-deployed device **800** (i.e., the O.D. toward the proximal end of the device **800**) exceeds that of the dilator sheath **220** and that of the exchange cannula **704** while in its "closed" configuration. The device **800** is subsequently delivered to the treatment site by radially outwardly displacing the fingers **724** of the exchange cannula **704** to create a pathway that has a diameter large enough to accommodate the passage of the device **800**, while isolating the working channel from adjacent organs or anatomical structures.

[**0338**] In accordance with another aspect of the embodiments described herein, there is provided an exchange system that provides a protected a portal to a treatment site, and that comprises an exchange bushing and an exchange tube. With reference to FIGS. **30**A-C, in one embodiment, there is provided exchange system assembly **730** comprising an exchange bushing **732** and an exchange cannula **734**.

[0339] The exchange bushing **732** comprises a tube **740** that extends between a distal end **742** and a proximal end **744**, and defines an inner lumen **741**. The bushing distal end **742** is typically beveled at an angle of about 20° to about 70°, often about 30° to about 60°. In one embodiment, the distal end is beveled at an angle of about 45°. The outside diameter may also be tapered to a reduced diameter at the distal end **742** to facilitate advance through the tissue tract.

[0340] The bushing **732** is typically machined or injection molded from stainless steel, delrin etc. or any other known suitable material.

[0341] The exchange cannula **734** comprises a tube **750** that extends between a distal end **752** and a proximal end **754**, and defining an inner lumen **751**. The tube distal end **752** is typically beveled at an angle of about 20° to about 70°, often about 30° to about 60°. In one embodiment, the distal end **752** is beveled at an angle of about 45°.

[0342] The exchange cannula **734** is typically formed from stainless steel, or from a suitable polymer, such as acetal copolymer, or the like.

[0343] With reference to the exchange assembly **730** shown in FIG. **30**A, the distal portion of the exchange bushing **732** protrudes from distal end **752** of the exchange tube **734**. In one mode of use, the bushing **732** is distally advanced into the sacrum over the dilator sheath **220** described above. Once the bushing **732** is advanced over the sheath **200** and seated on the sacrum, the exchange cannula **734** is distally advanced over the bushing **732** and into place. The bushing **732** is then withdrawn over the dilator sheath **220**, which is then also removed, enabling the insertion of subsequent instruments, devices, or implants through the lumen **751** of the tube **734**. In one embodiment, the subsequent instruments, devices, or implants are advanced through the lumen **751** over a guidewire. In another embodiment, the subsequent instruments, devices, or implants are advanced through the lumen **751** without the aid of a guidewire.

[0344] With reference to FIGS. **30**D-E, in a preferred embodiment, the exchange system **730'** comprises a bushing **732** and an exchange cannula **734'**. The exchange cannula **734'** comprises a handle such as an annular band **756** at the proximal end **754'**. The annular band **756** or other aspect of proximal end **744** comprises one or more indicium such as lines, pins or notches **768**, **769**, as orientation indicators to show the rotational alignment of the bevel of the distal end **752'** of the exchange cannula **734'**.

[0345] In accordance with one aspect of the embodiments described herein, there is provided a temporary distraction device for separating adjacent vertebral bodies. In one mode of use, the temporary distraction tool is used for preparation of a disc space for receipt of augmentation materials (e.g., osteogenic materials, or annulus repair or sealant materials).

[0346] In another mode of use, the temporary distraction tool is used to prepare a disc space for subsequent soft fusion (e.g., osteogenic, osteoconductive, or osteoinductive procedure without a fusion rod). In another mode of use, the temporary distraction tool is used to accommodate subsequent implantation of fusion or motion preservation devices. Background information on distraction devices in general appears in co-pending U.S. patent application Ser. No. 10/309,416, filed on Dec. 3, 2002, the content of which is incorporated in its entirety into this disclosure by reference.

[0347] In an application where only temporary distraction is desired, a temporary distraction device should be able to cause a separation of the adjacent vertebral bodies, and thereafter be removed without causing compression of the intervening disc. This is accomplished in accordance with the present invention by providing a temporary distraction working tip on a temporary distraction tool which is similar to the distraction implant **800** previously described. However, by providing the device in two pieces as described below, the structure may be utilized to achieve distraction by rotation in a first direction, and the device may thereafter be removed from the patient without causing compression.

[0348] In accordance with one aspect of the embodiments described herein, there is provided a two-piece temporary distraction device for achieving separation of adjacent vertebral bodies, while permitting removal of the device without recompressing the intervening disc space. In one embodiment, shown in FIGS. **31**, **32**A-B and **33**A-E, the two-piece temporary distraction device **860** comprises a distal piece **862** and a proximal piece **864**.

[0349] The distal and proximal pieces **862** and **864** comprise screw external threads **863** and **865**, respectively. The thread pitches of the external threads **863** and **865** are chosen to achieve the desired or targeted level of distraction, as explained in further detail in co-pending and commonly assigned U.S. patent application Ser. No. 10/309,416 filed on Dec. 3, 2002, which is incorporated herein in its entirety by reference.

[0350] With reference to FIGS. **33**A-B, the distal piece **862** extends between a distal end **872** and a proximal end **874** and has external threading **863** along at least a portion of its longitudinal axis. The proximal end **874** of the distal piece **862** comprises an external non-threaded segment **875**. In the present embodiment, non-threaded segment **875** comprises the male portion of a lap joint that engages female portion **885** of proximal piece **864**, as described in further detail below.

[0351] The external threading **863** typically has a pitch of about 10 to about 16 threads per inch, often about 10 to about 14 threads per inch. The external threading **863** typically has a major diameter of about 0.350" to about 0.550", often about 0.400" to about 0.500". The external threading **863** typically has a minor diameter of about 0.230" to about 0.490", often about 0.280" to about 0.380". In one embodiment, the external threading **863** on distal piece **862** extends about 1.00" along the longitudinal axis of the distal piece **862**.

[0352] The distal piece **862** comprises a cavity **877** defined by an internal unthreaded segment **878** and an internal threaded segment **879**. The dimensions of segments **878** and **879** are chosen to facilitate temporary engagement with the insertion tip **900** of the insertion assembly **901**, as well as temporary engagement with the extraction tip **920** of the extraction assembly **921**, as described in further detail below.

[0353] Internal segment **878** is typically non-circular in cross-section. For example, in the present embodiment, the segment **878** comprises a rectangular cross-section. In another embodiment, not illustrated, the segment **878** com-

prises a hexagonal or other polygon or non circular cross-section. In general, cross-sectional shape of the segment **878** is complementary to the shape or geometry of segment **910** of the insertion tip **900** of the insertion assembly **901**, described in further detail below, to allow torque transmission from the insertion assembly **901** to the distal piece **862**.

[**0354**] Internal threaded segment **879** comprises internal threading **880** that is complementary to external threading **930** on the extraction tip **920** of the extraction assembly **921**, described in further detail below. The portion of the cavity **877** defined by the segment **879** typically has a larger diameter than that defined by the segment **878**.

[**0355**] The length of the distal piece **862** is typically in the range of about 0.5" to about 2.00", often about 1.00" to about 1.25". In one exemplary embodiment, the length of the distal piece **862** is approximately 1.125".

[**0356**] The actual dimensions (e.g, length, inner diameter, outer diameter, etc.) of the distal piece **862**, proximal piece **864**, device **860**, etc. described herein will depend in part on the nature of the treatment procedure and the physical characteristics of the patient, as well as the construction materials and intended functionality, as will be apparent to those of skill in the art.

[**0357**] With reference to FIGS. **33**C-E, the proximal piece **864** extends between a distal end **882** and a proximal end **884** and has external threading **865** along a portion of its longitudinal axis. The distal end **882** of the proximal piece **864** comprises an internal non-threaded segment **885** In the present embodiment, non-threaded segment **885** comprises the female portion of a lap joint that engages male portion **875** of distal piece **862**.

[**0358**] The proximal piece **864** comprises a cavity **887** defined by internal unthreaded segment **888** and internal threaded segment **889**. The dimensions of segments **888** and **889** are chosen to facilitate temporary engagement with the insertion tip **900** of the insertion assembly **901**, as well as temporary engagement with the extraction tip **920** of the extraction assembly **921**, as described in further detail below.

[**0359**] As with internal segment **878** described above, internal segment **888** is typically non-circular in cross-section. For example, in the present embodiment, the segment **888** comprises a polygon such as a rectangular cross-section. The cross-sectional shape of the segment **888** is complementary to the cross-sectional shape of segment **910** of the insertion tip **900** of the insertion assembly **901**.

[**0360**] As with internal threaded segment **879** described above, internal threaded segment **889** comprises internal threading **890** that is complementary to the external threading **930** on the extraction tip **920** of the extraction assembly **921**. The portion of the cavity **887** defined by the segment **889** typically has a larger diameter than that defined by the segment **888**.

[**0361**] The length of the proximal piece **864** is typically in the range of about 0.5" to about 1.75", often about 0.75" to about 1.25". In one exemplary embodiment, the length of the proximal piece **864** is approximately 1.00".

[**0362**] The outer diameter (O.D.; i.e., the major thread diameter) of the proximal piece **864** is typically in the range of about 0.40" to about 0.70", often about 0.5" to about 0.6". In one exemplary embodiment, the O.D. of the proximal piece **864** is approximately 0.550".

[**0363**] The threading **865** typically has a pitch of about 8 to about 12 threads per inch, often about 9 to about 11 threads per inch. The threading **865** typically has a minor diameter of about 0.240" to about 0.620", often about 0.380" to about 0.480".

[**0364**] In one embodiment, internal threaded segment **889** has a length of about 0.375" along the longitudinal axis. In one embodiment, the internal unthreaded segment **888** has a length of about 0.625" along the longitudinal axis.

[**0365**] In one embodiment, the distal piece **862** and proximal piece **864** of the temporary distraction device **860** are positioned relative to each other by engaging the male portion of lap joint **875** with the female portion **885**

[**0366**] The length of the assembled device **860** is typically in the range of about 1.50" to about 2.50", often about 1.90" to about 2.10". In one exemplary embodiment, the length of the device **860** is approximately 2.00".

[**0367**] The distal and proximal pieces **862**, **864** are typically made from any known suitable material, such as, for example, stainless steel, titanium, aluminum, or the like, or composites thereof.

[**0368**] In accordance with one aspect of the embodiments described herein, there is provided an insertion assembly for delivering a two-piece temporary distraction device into the treatment site.

[**0369**] In one embodiment, shown in FIGS. **32**A and **34**A-C, the assembly **901** comprises a two-piece temporary distraction device **860**, an insertion tip **900**, and a driver tool **855**.

[**0370**] With reference to FIGS. **34**A-C, the insertion tip **900** extends between a distal end **902** and a proximal end **904** and comprises a distally-located segment **910** that is designed to releasably engage with internal segments **878** and **888** of the two-piece device **860**. In the present exemplary embodiment, the segment **910** comprises a rectangular structure. In another embodiment, not illustrated, the segment **910** comprises a hexagonal, or other noncircular longitudinally extending structure.

[**0371**] The insertion tip **900** comprises a proximally-located segment **915** that is shaped and dimensioned to engage with the driver tool **855**, described in further detail below. In the present exemplary embodiment, the segment **915** comprises a hexagonal cross-section. In another embodiment, the segment **915** comprises an octagonal or other non-circular longitudinally extending structure.

[**0372**] The insertion tip **900** may also be provided with one or more attachment structures such as holes or recesses **917** positioned to align with corresponding structure such as hole(s) **859** of the driver tool **855** to receive one or more screws or pins **854** to secure the tip **900** into the driver tool **855**.

[**0373**] The length of the segment **910**, is typically in the range of about 0.50" to about 1.50", often about 0.90" to about 1.10". In one exemplary embodiment, the length of the insertion tip **900** is approximately 1.00".

[0374] The insertion tip **900** is typically made from any known suitable material, such as, for example, stainless steel (e.g., 17-4 alloy), titanium, or the like, or composites thereof.

[0375] With reference to FIGS. **31**, **32**A and **34**A-C, the driver tool **855** comprises a shaft **899** that extends between a distal end **856** and a proximal end **857**. The tool **855** comprises a proximally-located handle **858** and one or more distally-located holes **859** positioned to align with the hole(s) **917** of the insertion tip **900** (described above) or the extraction tip **920** (described below), and to receive one or more screws or pins **854** to secure tips **900** or **920** into the tool **855**.

[0376] The distal end **856** of the driver tool **855** comprises an aperture **850** for receiving the proximally-located segments **915** and **935** of the tips **900** and **920**, respectively. In general, the cross-sectional shape and longitudinal length of the aperture **850** is complementary to that of segments **915** and **935**. For example, in the illustrated embodiment, both the aperture **850** and segments **915** and **935** comprise a hexagonal cross-section and have a length of about 0.375".

[0377] The overall length of the driver tool **855** is typically in the range of about 12.00" to about 16.00", often about 13.00" to about 15.00". In one exemplary embodiment, the length of the driver tool **855** is approximately 14.00".

[0378] The outer diameter (O.D.) of the driver tool **855** is typically in the range of about 0.25" to about 0.50", often about 0.35" to about 0.40". In one exemplary embodiment, the O.D. of the driver tool **855** is approximately 0.375".

[0379] The driver tool **855** and its component parts are typically made from any known suitable material, such as, for example, stainless steel, titanium, aluminum, or the like, or composites thereof. The handle **858** is typically welded over the proximal end **857** of the tool **855**.

[0380] In accordance with one aspect of the embodiments described herein, there is provided an extraction assembly for removing a temporary distraction device without causing compression across the intervening disc space.

[0381] In one embodiment, shown in FIGS. **32**B and **35**A-C, the assembly **921** comprises a two-piece temporary distraction device **860**, an extraction tip **920**, and a driver tool **855**.

[0382] With reference to FIGS. **35**A-C, in one embodiment, the extraction tip **920** extends between a distal end **922** and a proximal end **924** and comprises a distally-located threaded segment **931** that is designed to releasably engage with the receiving segments **879** and **889** of the distal piece **862** and proximal piece **864**, respectively of the distraction device **860**.

[0383] In one embodiment, the distally-located threaded segment **931** of the extraction tip **920** comprises left-handed external threads **930** that complement left-handed internal threads **880** and **890** of the receiving segments **879** and **889**, respectively. The left-handedness of the threads **880**, **890**, **930** make it possible to rotate the extraction tool assembly **921** in a counter-clockwise direction, to engage each piece **862** and piece **864**, and remove or extract each of them sequentially, proximal **864** first, from the treatment site while rotating the assembly **921** in the counter-clockwise direction to unscrew each of the pieces of the distraction device **860** from the bone.

[0384] The extraction tip **920** comprises a proximally-located attachment surface on segment **935** that is shaped and dimensioned to releasably engage with a corresponding surface on driver tool **855**. In the present exemplary embodiment, the segment **935** comprises a hexagonal cross-section. In another embodiment, not illustrated, the segment **935** comprises an octagonal cross-section or other non-circular longitudinally extending structure.

[0385] The extraction tip **920** also comprises a releasable engagement structure such as one or more holes **937** positioned to align with hole(s) **859** of the driver tool **855** and receive one or more screws or pins **854** to secure the tip **920** into the driver tool **855**. Preferably, the components of the system are configured such that the same driver tool **855** can be used to extract both the proximal piece **864** and distal piece **862** from the treatment site.

[0386] The length of the extraction tip **920** is typically in the range of about 0.50° to about 1.50", often about 0.90" to about 1.10". In one exemplary embodiment, the length of the extraction tip **920** is approximately 1.00" The extraction tip **920** is typically made from any known suitable material, such as, for example, stainless steel, titanium, or the like, or composites thereof.

[0387] In accordance with one aspect of the modes of use described herein, there are provided methods of using a two-piece distraction device to temporarily separate two or more vertebral bodies in the spine.

[0388] In one mode of use, for a two vertebral body application, the two-piece temporary distraction device **860** is introduced into the treatment site by advancing segment **910** of the insertion tip **900** coaxially into engagement with internal segments **878** and **888** of the device **860**, and then rotating the device **860** into an axial bore as described elsewhere herein, under force applied generally distally. In one typical application, the device **860** is used to cause the separation of two adjacent vertebral bodies along the AAIIL. The device **860** is advanced through a caudal, proximal vertebral body, through an intervertebral disc, and into a cephalad, distal vertebral body, thereby causing distraction of the cephalad and caudal vertebral bodies, relative to each other. Rotation is continued until the desired degree of distraction has been achieved, as may be evaluated using conventional imaging technology. Over distraction can be corrected by rotating the distraction device **860** in an opposite direction.

[0389] Once the desired distraction has been achieved, the device **860** may be removed from the treatment site piece-by-piece by sequentially removing the proximal piece **864** and the distal piece **862** in a proximal direction. Following proximal retraction of the insertion tool, segment **931** of the extraction tip **920** is distally advanced to and rotatably engaged with the internal segment **889** of the proximal piece **864**, and then rotated in a predetermined direction to cause disengaged of the proximal piece **864** from the distal piece **862**, and thereby facilitating removal of the proximal piece **864** from the treatment site. The segment **931** is then readvanced distally through the access bore and engaged with the internal segment **879** of the distal piece **862**, and then rotated in a predetermined direction to cause of the distal piece **862** to be extracted from the treatment site.

[0390] In one mode of use, the above-described two-piece device **860** and assemblies **901** and **921** are used to achieve

temporary distraction (i.e., restoration of disc height) in preparation for implantation of either a fusion or a mobility restoration or preservation device as noted above. In one approach, distraction is maintained following removal of the distraction device **860** and before implantation of the therapeutic implant by having the patient lie in a prone or flat position on a horizontal surface, thereby relieving the patient's spine of axial compressive forces resulting from load bearing, motion, and the effects of gravity. In a fusion application, an implantable distraction device or other fusion implant may be supplemented by subsequent posterior insertion of facet or pedicle screws.

[**0391**] Various combinations of the tools and devices described above may be provided in the form of kits, so that all of the tools desirable for performing a particular procedure will be available in a single package. Kits in accordance with the present invention may include access kits, such as for achieving percutaneous access to the sacrum, and access kits for achieving soft tissue access to the sacrum and access through the sacrum into the desired treatment zone. Kits may also be provided with the tools necessary for disc preparation. Further kits may be provided with temporary distraction and/or insertion tools for insertion of implants.

[**0392**] Access kits may include all or any sub-combination of the following components, which have been described previously herein: one or more guide pin introducers, stylet, guide pin, guide pin handle, and guide pin extension. Each of these components may be either reusuable or disposable. The access kit may additionally include one or more dilators, such as a 6 mm dilator and 8 mm dilator, and a 10 mm dilator with sheath. In one implementation of the kit, each of the dilators is reusable, and the sheath is disposable. The access kit may additionally include twist drills, such as a 6 mm, 7.5 mm and 9 mm drills which may be reusable.

[**0393**] Disc preparation kits may differ, depending upon whether the procedure is intended to be one level or multi-level. The disc preparation kit may include a plurality of cutters. In a single level kit, anywhere from 3 to 7 cutters and, in one embodiment, 5 cutters are provided. In a two level kit, anywhere from 5 to 14 cutters may be provided, and, in one embodiment, 10 cutters are provided. All of the cutters may be one time use disposable.

[**0394**] The disc preparation kit may additionally include one or more tissue extraction tools, for removing fragments of the nucleus. In a one level kit, 3 to 8 tissue extraction tools, and, in one embodiment, 6 tissue extraction tools are provided. In a two level disc preparation kit, anywhere from about to 8 to about 14 tissue extraction tools, and, in one embodiment, 12 tissue extraction tools are provided. The tissue extraction tools may be disposable.

[**0395**] The disc preparation kit may additionally include a bone graft inserter, which may be disposable.

[**0396**] An allograft kit may be provided including, in addition to the tools in the access and disc preparation kits, an allograft inserter tool and a temporary distraction tool. A selection of twist drills may be provided, such as a 9.5 mm, 10 mm, 10.5 mm, 11 mm or 11.5 mm twist drill, depending upon the size of the desired graft. The allograft kit may additionally include an exchange system, including a cannula and bushing, as have been described previously herein.

[**0397**] A fusion kit intended for a one level fusion may include, in addition to the tools in the access and disc preparation with bone graft inserter kits a one piece fusion rod, a rod driver, and a paste inserter. The fusion kit may additionally include a plug, a plug driver, and one or more twist drills such as a 7.5 mm and a 6 mm. The fusion kit will additionally include an exchange system as has been discussed. The rod driver and twist drills may be reusable.

[**0398**] In an alternate fusion kit, intended for two-level fusion, the kit may include one, two-pieces fusion rods, or one, one-piece fusion rod and one mobility implant, or a two-piece implant, one of which is a fusion implant and one of which is a mobility device The fusion kit additionally includes a rod driver, a paste inserter, one proximal and one distal plugs and two plug drivers. The fusion kit may additionally include one or more twist drills, such as a 7.5 mm and a 6 mm twist drill. The fusion kit will additionally include an exchange system.

[**0399**] Although the present invention has been described in terms of certain preferred structures and embodiments, variations on the foregoing will become apparent to those of skill in art in view of the disclosure herein, and are considered to be within the scope of the present invention. Accordingly, the present invention is not intended to be limited by any of the forgoing disclosure, and is instead intended to extend to the full scope of the following claims.

What is claimed is:

1. An access assembly, for guiding instrumentation through soft tissue to a point on the spine, the assembly comprising:

an elongate, tubular guide pin introducer;

a blunt tipped stylet, slideably positionable within the guide; and

a guide pin, slideably positionable within the guide pin introducer.

2. An access assembly as in claim 1, wherein the guide pin comprises a beveled distal end.

3. An access assembly as in claim 1, wherein the guide pin comprises a proximal handle.

4. An access assembly as in claim 3, wherein the handle is removably carried by the guide pin.

5. An access assembly as in claim 1, wherein the stylet comprises a proximal handle.

6. An access assembly as in claim 1, wherein the guide pin comprises a sharpened distal tip.

7. An access assembly as in claim 1, wherein the proximal handle on the stylet is releasably engageable with the guide pin introducer.

8. An access assembly as in claim 1, wherein the guide pin comprises a proximal connector for connection to a guide pin extension.

9. An access assembly as in claim 7, wherein a distal end of the stylet is exposed beyond a distal end of the guide pin introducer when the stylet is engaged with the guide pin introducer.

* * * * *