May 25, 1948. B. J. DROZINSKI 2,442,119

SAFETY LOCK FOR PARACHUTE HARNESS

Filed June 23, 1944

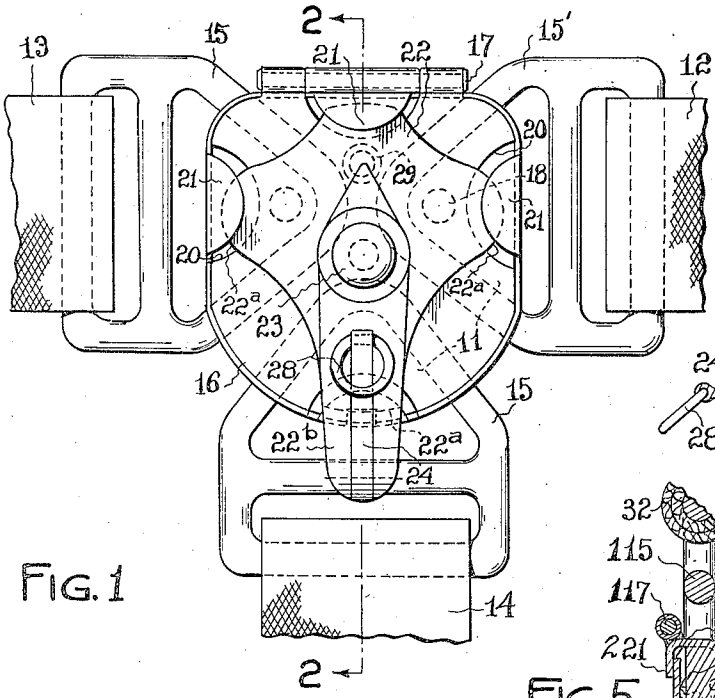

FIG. 1

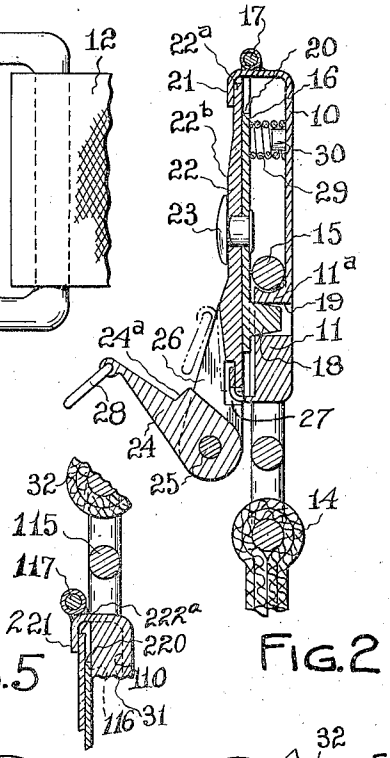

FIG. 2

FIG. 5

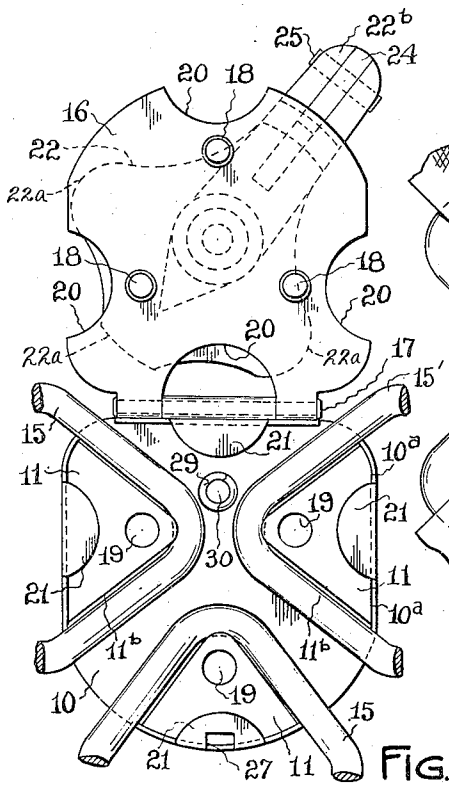

FIG. 3

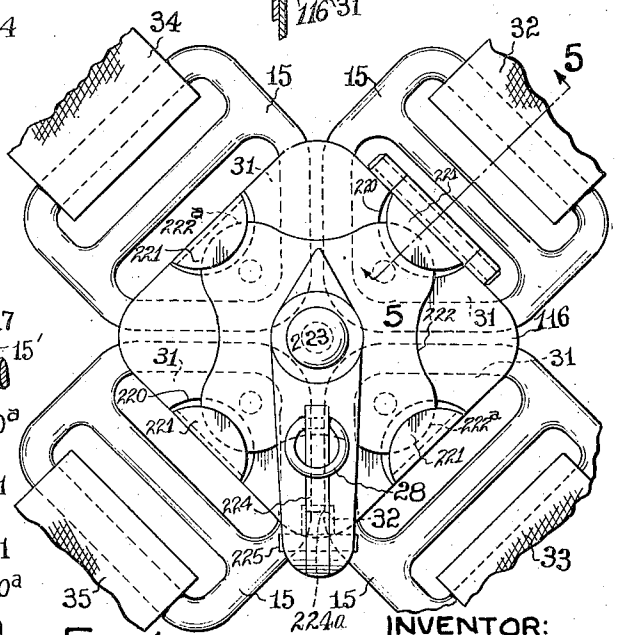

FIG. 4

INVENTOR:
BRONISLAW J. DROZINSKI
BY Hyde and Meyer
ATTORNEYS.

Patented May 25, 1948 2,442,119

UNITED STATES PATENT OFFICE

2,442,119

SAFETY LOCK FOR PARACHUTE HARNESS

Bronislaw J. Drozinski, Cleveland, Ohio

Application June 23, 1944, Serial No. 541,701

12 Claims. (Cl. 24—205)

1

This invention relates to an improvement in a lock for parachute harness or the like.

An object of the present invention is to provide a positive and safe lock for the usual parachute harness and one which at the same time is easily opened when necessary.

Another object of the present invention is to provide a lock which is opened by the mere turn of the locking member a few degrees about its pivot point.

Another object of the present invention is to provide a safety device for insuring that the lock remains in its holding position until a positive movement is made to release it. In other words, it cannot be accidentally released.

Still another object of the present invention is to provide several means acting in combination to positively hold the ends of parachute harness straps in their holding position together with the simultaneous release of all holding means when desired.

A further object of the invention is to provide a locking device which is automatically thrown open as soon as the lock is released.

Other objects and advantages of the invention will be apparent from the accompanying drawings and specification, and the essential features thereof will be set forth in the appended claims.

In the drawings,

Fig. 1 is a plan view of one form of my improved lock with all of the locking means in holding position;

Fig. 2 is a sectional view through the same taken along the line 2—2 of Fig. 1;

Fig. 3 is a view of the device of Fig. 1 with the locking devices all in position to release the parachute harness;

Fig. 4 is a view similar to Fig. 1 but showing my device modified to lock a four-strap harness as compared with the three-strap harness of the first described modification; while

Fig. 5 is a fragmental sectional view taken along the line 5—5 at Fig. 4.

In the device of Figs. 1 to 3, the locking device consists of a base plate or member 10 on which are mounted a plurality of positioning blocks 11 equal to the number of harness straps to be attached. The device of Figs. 1 to 3 is adapted to a parachute harness including a strap 12 of webbing, leather, or the like adapted to pass beneath the left armpit of the wearer, a strap 13 adapted to pass under the right armpit of the wearer, and a strap 14 adapted to pass through the crotch of the wearer. These straps customarily end in a

2

triangular shape loop or buckle 15, and the positioning blocks 11 preferably but not necessarily conform generally to this triangular shape. While it is not essential to the working of my invention, I prefer to permanently fix one of the buckles 15 to the base plate 10 in the position shown in Figs. 1 and 3. Hereinafter I have assumed that the buckle 15' of strap 12 is permanently fixed in position as by welding, brazing, or soldering. This insures that the locking device is always available on the parachute harness in its proper position. The buckles 15 attached to straps 13 and 14 are therefore removably positioned on base plate 10 and around the positioning blocks 11.

A cover plate 16 is arranged for positioning over the buckles 15 when the latter are in position to be locked. Preferably this cover plate is permanently connected to the base plate 10 so that it will always be in its proper position. The securing means here shown is a hinge 17 which is at the upper side of the locking device when it is in its normal position on the body of a wearer in erect position. The positioning blocks 11 are of approximately the same thickness as the buckles 15 so that when the buckles are in position to be locked the plate 16 may be folded down upon the buckles as shown in Figs. 1 and 2 and, so long as the plate 16 is held in this position, the buckles 15 are prevented from escaping from the blocks 11. Locking and positioning pins 18 are provided, one for each positioning block 11. These pins extend from plate 16 toward the base plate 10. In each positioning block is a recess 19 adapted to receive its associated pin 18. This is a further insurance of the proper positioning of plate 16 in locking position and further insurance against accidental escape of buckles 15 from positioning blocks 11. The peripheral edges of plate 16 are provided with recesses 20 (here substantially semi-circular in form) to enable the cover plate 16 to pass over the locking lips 21 presently to be described.

Means is provided for positively securing the cover plate 16 in locking position. This means comprises a locking plate 22 pivotally mounted on the outer face of cover plate 16 as by means of the rivet 23 illustrated. This locking plate is provided with peripheral portions such as the four tongues 22a each adapted to pass beneath one of the lips 21 when the device is locked as shown in Figs. 1 and 2. It will be noted that lips 21 extend upwardly from the base plate 10 to a level just above locking plate 22 in its locking position as shown in Fig. 2 so that when plate 16

is tight against the positioning blocks 11 the tongues 22a have a snug fit under the lips 21.

It results from the above described construction that when the wearer has adjusted his parachute harness and has placed the buckles 15 over the positioning blocks 11 (with the cover plate 16 open as shown in Fig. 3) then the cover plate may be closed about the hinge 17 to the position of Figs. 1 and 2 after which the locking plate 22 is moved from the position shown in Fig. 3 to that shown in Figs. 1 and 2 by grasping the handle or extension 22b integral with plate 22. It will be noted that this locking movement of plate 22 requires an oscillation of only thirty or forty degrees about pivot 23. Thus four interengaging sets of parts 21, 22a provide a positive lock for holding the plate 16 in the position of Figs. 1 and 2.

Additional safety means may be provided if desired to insure against accidental oscillation of plate 22 out of its locking position. To this end a safety catch 24 is pivotally mounted by means of pin 25 in the outer end of handle 22b. This safety catch, in its locking position shown in dot-dash lines in Fig. 2, folds down into a slot 26 in handle 22b. A shoulder 24a of the catch passes through a notch 27 in the lip 21 at the bottom of the device (the lip adjacent strap 14). In this position the plate 22 cannot be oscillated. A ring 28 or the like is provided at the free end of the safety catch so that it is readily engaged even by the gloved hand of a parachutist to move the safety catch from its locking position shown in dot-dash lines in Fig. 2 to its unlocking position shown in full lines there. Then when the safety catch is released the locking plate 22 may be oscillated as previously described to remove the tongues 22a from position beneath the lips 21 so as to permit cover plate 16 to be raised so as to release the buckles 15.

Preferably, but not necessarily, means is provided to automatically throw open the cover plate 16 when the locking plate 22 is turned to unlocking position. As shown in Figs. 1 to 3, this comprises a short, stiff, spiral spring 29 which is held between the base plate 10 and the cover plate 16 when the device is locked, at which time the spring 29 is compressed as shown in Fig. 2. Obviously upon release of the lock this spring will cause the cover plate 16 to be thrown open. Means may be provided if desired to hold the spring 16 against escape as by providing the projection 30 on the base 10 tightly engaging the interior diameter of the spring 29, but this is immaterial to the functioning of my invention.

A modification of the above device is shown in Figs. 4 and 5 so as to accommodate a four-strap harness. Here the device is like that previously described except that there are four positioning blocks 31 to receive the four buckles 15 instead of the three blocks 11 previously described. In this form of device the straps 32 and 33 pass around the left shoulder and thigh respectively of the wearer while straps 34 and 35 pass around the right shoulder and thigh of the wearer. For this reason, the device will appear on the chest of a wearer substantially in the position shown in Fig. 4. All parts of the device are like those previously described and perform similar functions. The base plate 110 is provided with four lips 221 which overlie four tongues 222a on the locking plate 222. This in turn is pivotally mounted at 223 on the cover plate 116. The safety catch 224 has a shoulder 224a which enters into a notch 32 in the base plate 110 to perform

the same holding function as in the first described modification where the shoulder 24a entered the notch 27. Referring to Fig. 5 it will be noted that the hinge 117 is so positioned relative to the adjacent lip 221 that the cover plate 116 is adapted to pass over the lip (by means of the recess 220) to a position tight against positioning block 31 after which the tongue 222a of locking plate 222 engages beneath the lip 221 to hold the buckle 15 in place. With these changes the device of Figs. 4 and 5 functions exactly the same as the device of Figs. 1 to 3.

Preferably, but not necessarily, the edges of the positioning blocks 11 nearest the apex of the associated buckle are slightly undercut as shown at 11a (Fig. 2) so as to form a slight hook for retaining the buckle.

It will thus be seen that I have provided a lock for a parachute harness which is positively locked and simple to construct and yet it is easily unlocked by one or two simple movements and insures almost instant release of the harness in an emergency.

What I claim is:

1. A safety lock for multiple-strap parachute harness comprising a base member, positioning blocks on said member, one for each strap and adapted to receive and hold the ends of said straps, a cover plate adapted to overlie said blocks and strap ends, said cover being mounted for movement to uncover said blocks and strap ends, interengaging means on said base member and said cover plate adapted to lock said plate in said overlying position, and handle means on said last named means for moving said interengaging means to the unlocking position.

2. A safety lock for multiple-strap parachute harness comprising a base member, positioning blocks on said member, one for each strap and adapted to receive and hold the ends of said straps, a cover plate hingedly mounted on said base member and adapted to overlie said blocks and strap ends, lips on said base member positioned above the level of said plate, a locking member oscillatably mounted on said plate, and peripheral portions of said locking member adapted by oscillation thereof to engage beneath said lips to lock said cover plate to said base member.

3. The combination of claim 2 including spring means held stressed by said cover plate when in locking position and adapted to throw said cover plate out of locking position when said locking member is disengaged from said lips.

4. The combination of claim 2 wherein said cover plate is hinged to said base member at one side thereof, there being recesses provided in the peripheral edges of said cover plate permitting the latter to pass over said lips.

5. A safety lock for multiple-strap parachute harness comprising a base member, positioning blocks on said member, one for each strap and adapted to receive and hold the ends of said straps, a cover plate hingedly mounted on said base member and adapted to overlie said blocks and strap ends, lips on said base member positioned above the level of said plate, a locking member oscillatably mounted on said plate, peripheral portions of said locking member adapted by oscillation thereof to engage beneath said lips to lock said cover plate to said base member, and means preventing accidental oscillation of said locking member.

6. A safety lock for multiple-strap parachute harness comprising a base member, positioning

blocks on said member, one for each strap and adapted to receive and hold the ends of said straps, a cover plate hingedly mounted on said base member and adapted to overlie said blocks and strap ends, lips on said base member positioned above the level of said plate, a locking member oscillatably mounted on said plate, peripheral portions of said locking member adapted by oscillation thereof to engage beneath said lips to lock said cover plate to said base member, and a safety lock pivotally mounted on said locking member and adapted to interengage said base member in the locked position only of said locking member.

7. A safety lock for multiple-strap parachute harness comprising a base member, positioning blocks on said member, one for each strap and adapted to receive and hold the ends of said straps, a cover plate hinged to said base member and adapted to overlie said blocks and strap ends, said blocks having recesses coacting pins on said plate and interengaging with said recesses when said plate is in said overlying position, and releasable means for holding said cover plate closed in said overlying position.

8. A safety lock for holding the straps of a parachute harness in place on the body of a wearer wherein the ends of said straps are provided with loop-type buckles, comprising a base member, positioning blocks on said member, one for each strap, each block having a contour adapted to fit with the loop of a buckle, lips on said base member, one over each block, a

cover plate hinged to said base member, said cover plate being adapted when closed to hold said buckles on said blocks, a locking member oscillatably mounted on said cover plate, and peripheral portions of said locking member being adapted by oscillation thereof, when said cover plate is closed, to engage beneath said lips to lock said cover plate to said base member.

9. The combination of claim 8 including a safety lock adapted to interlock said locking member and said base member only when said locking member is in locking position.

10. The combination of claim 8 including spring means for moving said cover plate out of closed position when said locking member is moved to unlock said cover plate.

11. The combination of claim 8 including pins on said cover plate and coacting recesses in said blocks to receive said pins when said plate is closed.

12. The combination of claim 8 wherein said blocks are undercut where engaged by said buckles, whereby said buckles are more firmly held.

BRONISLAW J. DROZINSKI.

REFERENCES CITED

The following references are of record in the file of this patent:

UNITED STATES PATENTS

Number	Name	Date
2,255,258	Lethern et al.	Sept. 9, 1941