Feb. 12, 1924. 1,483,861

S. M. HEULINGS

FILLING MACHINE

Filed March 19, 1920 5 Sheets-Sheet 1

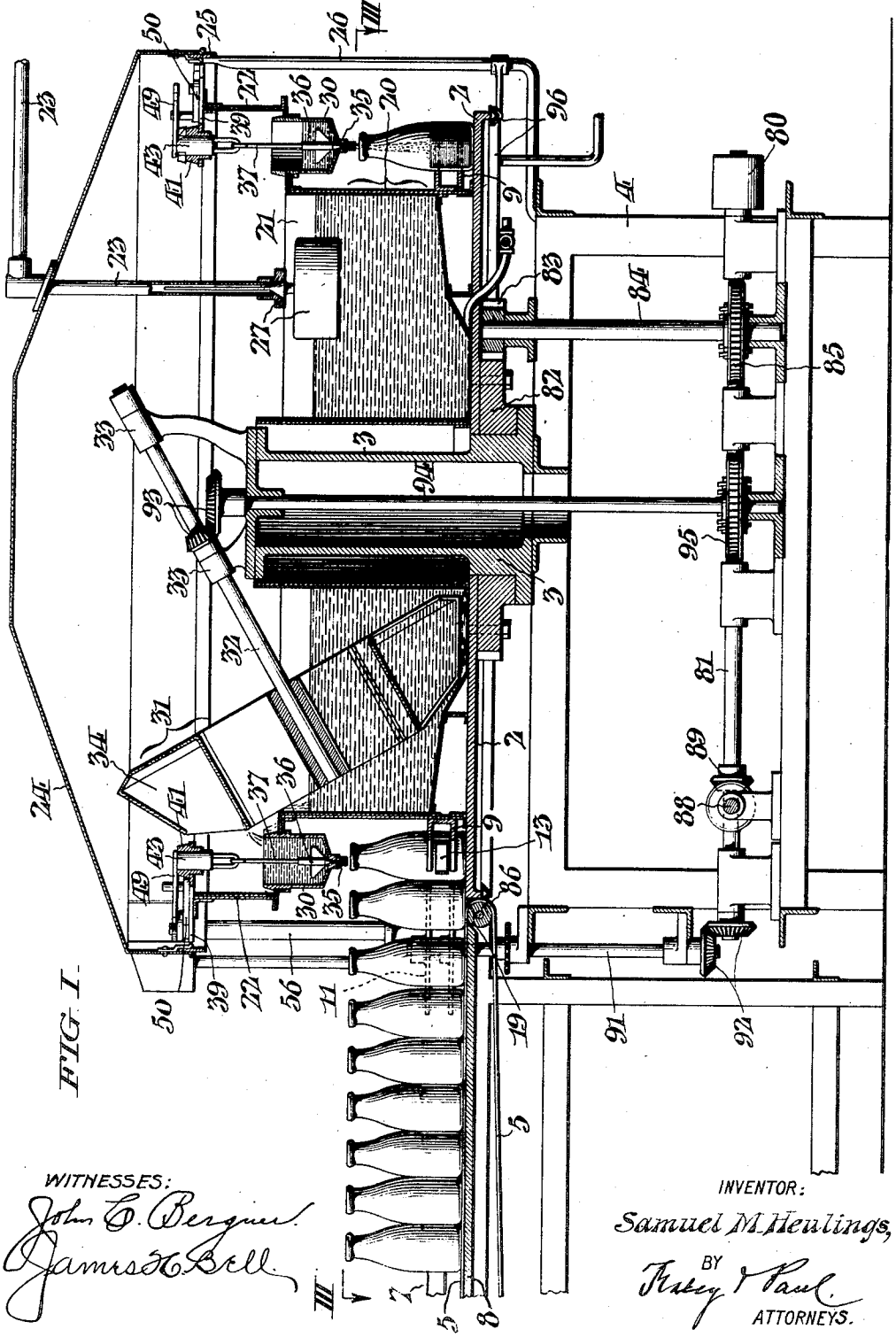

FIG. I.

WITNESSES:
John C. Bergner
James H. Bell

INVENTOR:
Samuel M. Heulings,
BY
Fisher & Paul
ATTORNEYS.

Feb. 12, 1924. 1,483,861

S. M. HEULINGS

FILLING MACHINE

Filed March 19. 1920 5 Sheets-Sheet 2

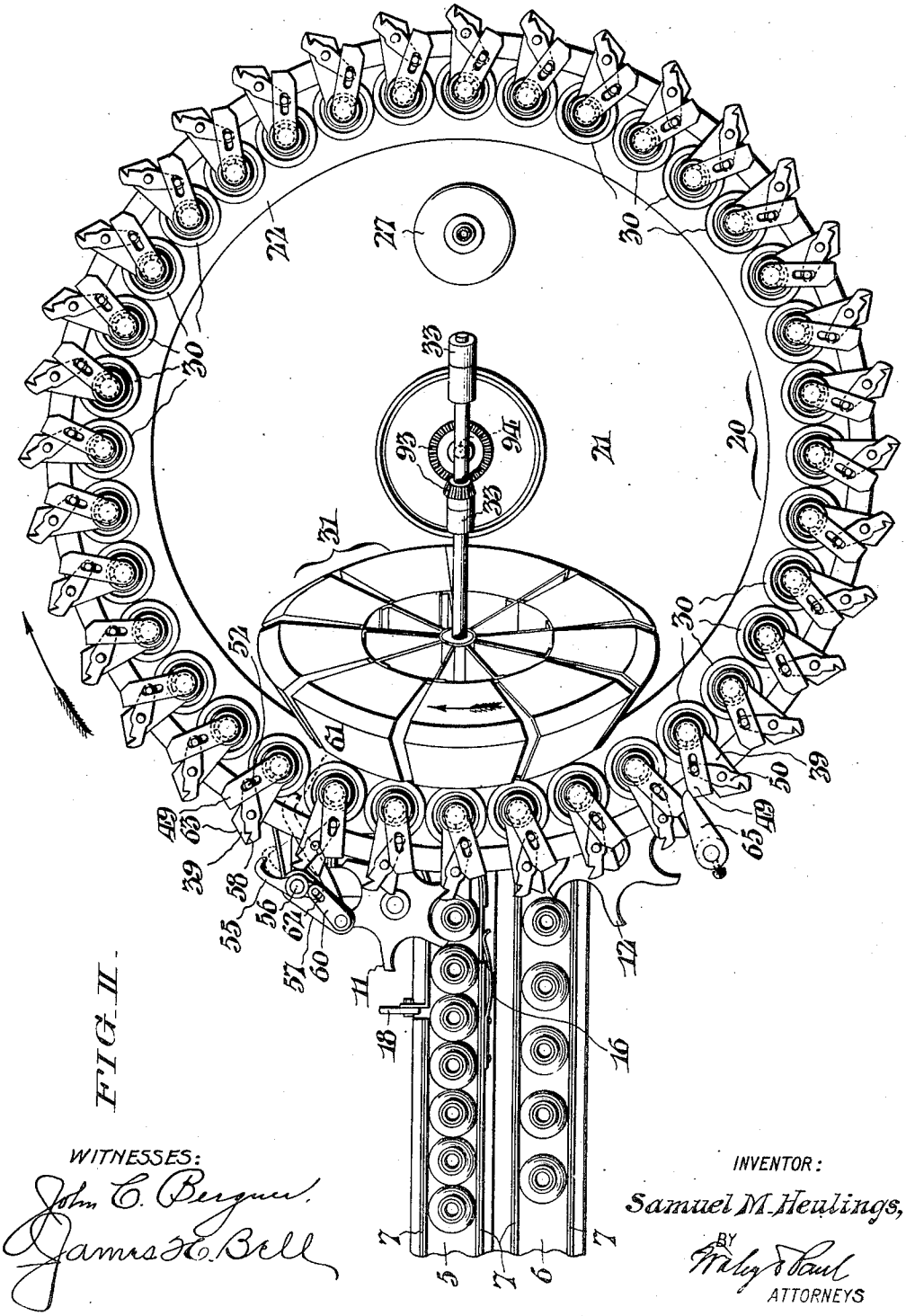

FIG. II.

WITNESSES:

John C. Bergner.

James H. Bell

INVENTOR:

Samuel M. Heulings,

BY

Wiley & Paul

ATTORNEYS

Feb. 12, 1924. 1,483,861

S. M. HEULINGS

FILLING MACHINE

Filed March 19, 1920 5 Sheets-Sheet 3

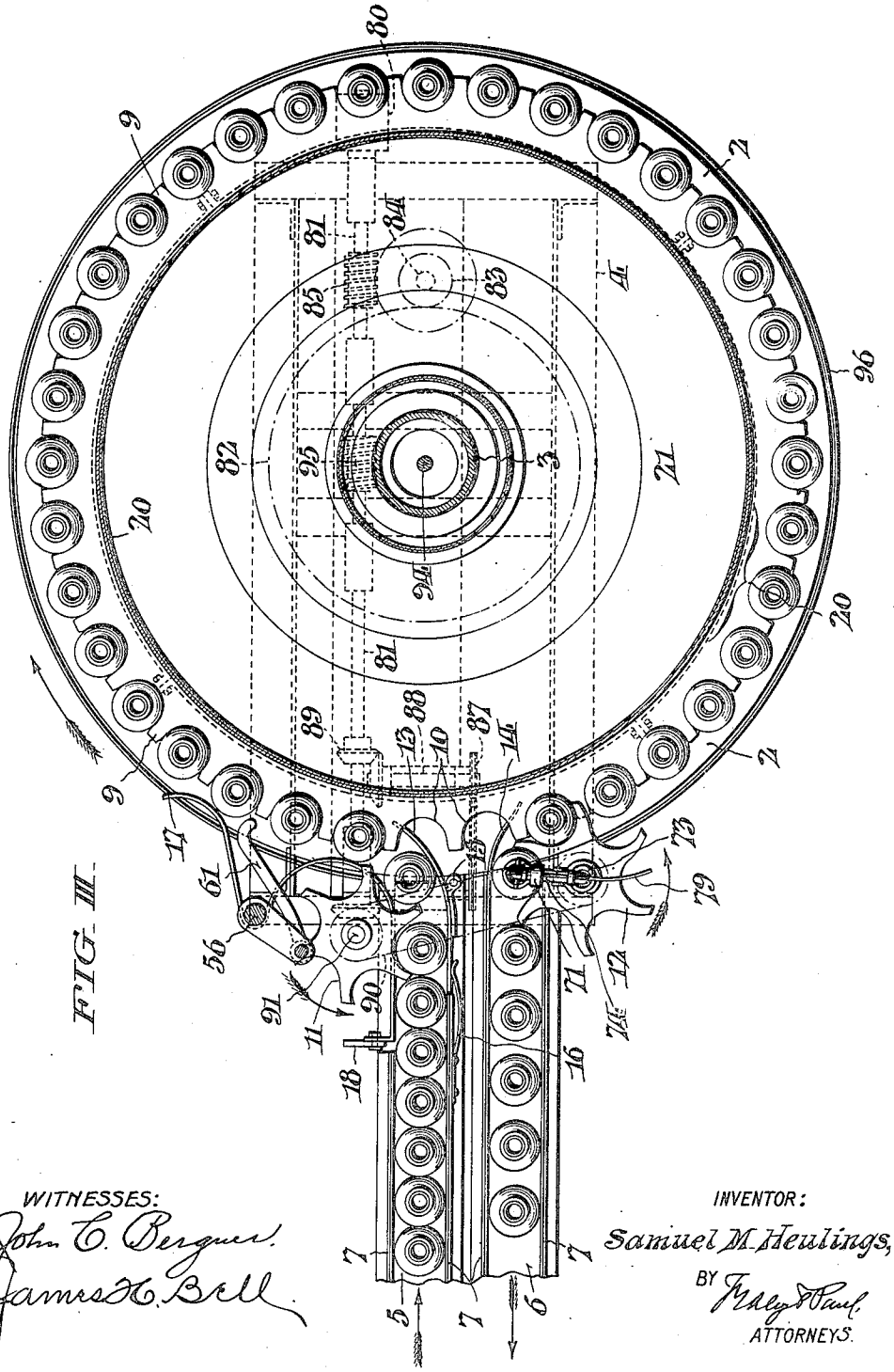

FIG. III.

WITNESSES:
John C. Bergner.
James H. Bell.

INVENTOR:
Samuel M. Heulings,
BY Raley & Paul.
ATTORNEYS.

Feb. 12, 1924. 1,483,861

S. M. HEULINGS

FILLING MACHINE

Filed March 19, 1920 5 Sheets-Sheet 4

FIG. IV.

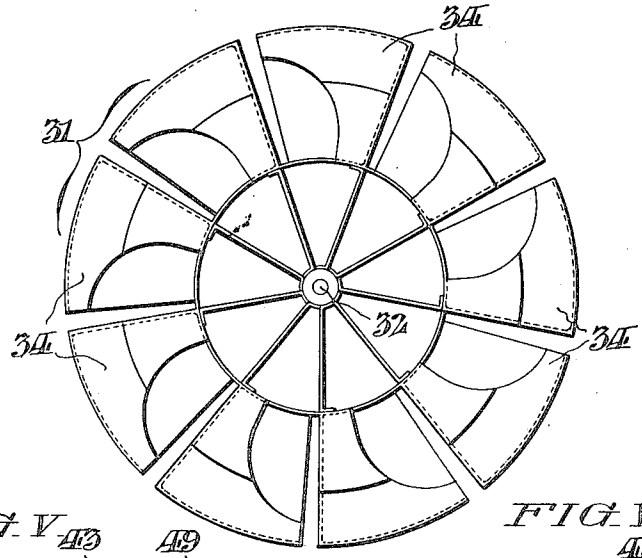

FIG. V.

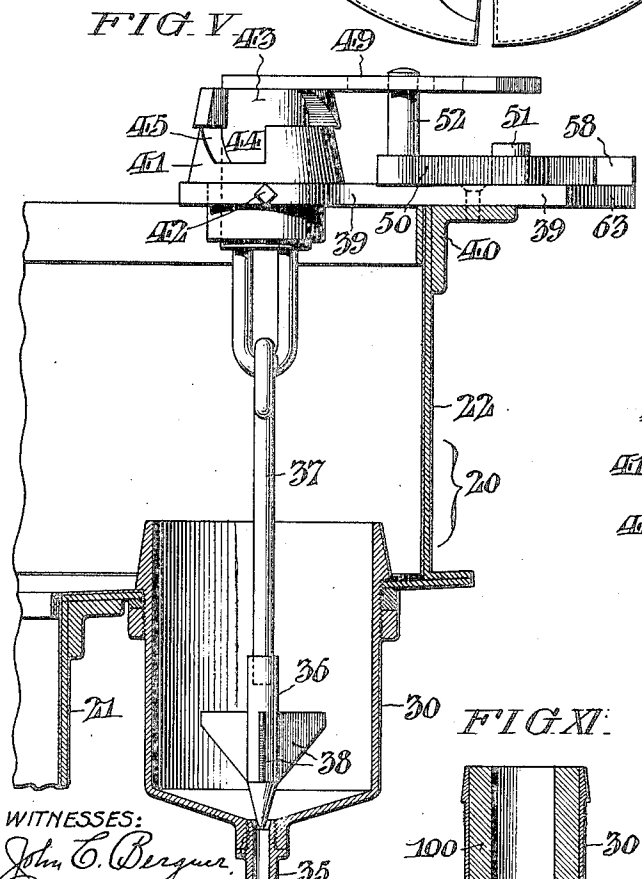

FIG. VII.

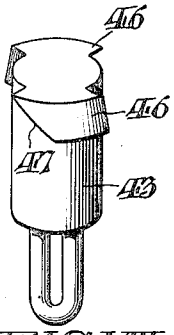

FIG. VIII.

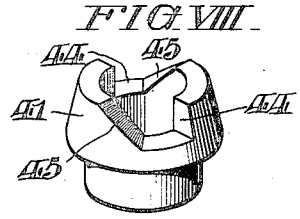

FIG. VI.

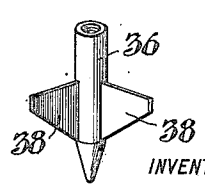

FIG. XI.

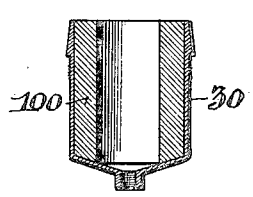

WITNESSES:

John C. Berguer.

James H. Bell.

INVENTOR:

Samuel M. Heulings,

BY Mackey & Paul

ATTORNEYS.

Feb. 12, 1924. 1,483,861

S. M. HEULINGS

FILLING MACHINE

Filed March 19, 1920 5 Sheets-Sheet 5

FIG. IX.

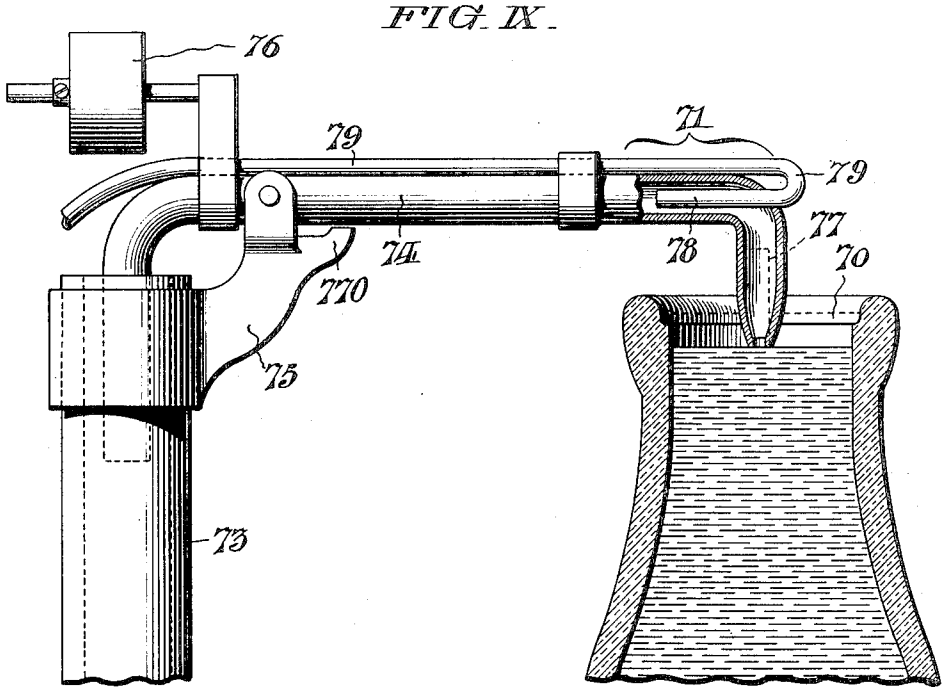

FIG. X.

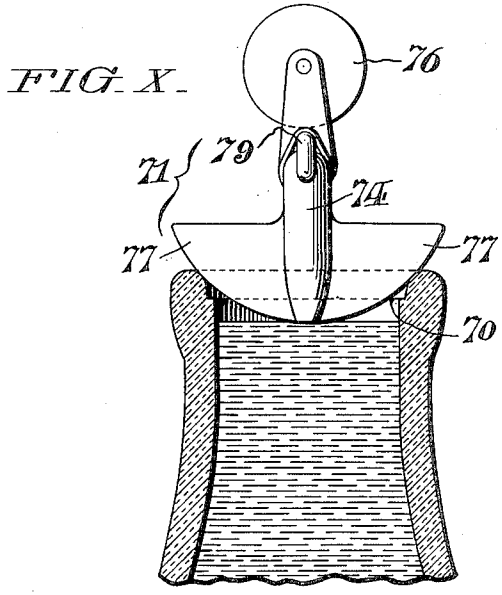

WITNESSES:

John C. Bergner.

James H. Bell.

INVENTOR:

Samuel M. Heulings,

BY Haley & Paul

ATTORNEYS.

Patented Feb. 12, 1924. 1,483,861

UNITED STATES PATENT OFFICE.

SAMUEL M. HEULINGS, OF HADDONFIELD, NEW JERSEY.

FILLING MACHINE.

Application filed March 19, 1920. Serial No. 367,224.

To all whom it may concern:

Be it known that I, SAMUEL M. HEULINGS, a citizen of the United States, residing in Haddonfield, in the county of Camden and State of New Jersey, have invented certain new and useful Improvements in Filling Machines, whereof the following is a specification, reference being had to the accompanying drawings.

My invention relates to filling machines and apparatus for charging bottles or other containers, my aim being to secure rapid, accurate and economical operation, large capacity, simplicity and ruggedness of construction, durability and freedom from derangement. The invention is of special advantage for the bottling of fluent materials or liquids such as milk, and I have hereinafter described and illustrated in detail the best embodment of the invention at present known to me with special reference to this application. How the above and other advantages can be secured in connection with the invention will appear from the description of the embodiment in question.

In the drawings, Fig. I, is a vertical sectional elevation through a bottle filling machine embodying the invention.

Fig. II, is a plan view of the structure with the top cover removed to reveal the mechanism within.

Fig. III, is a plan sectional view at the plane of the arrows III—III in Fig. I.

Fig. IV, is an end or axial view of a bucket wheel lifter by which the liquid to be bottled is delivered to the measuring vessels.

Fig. V, is a fragmentary vertical sectional view, upon an enlarged scale, illustrating the bottle filling devices and mechanism; and

Fig. VI, is a perspective view of the bottle filling control valve appearing in elevation in Fig. V.

Figs. VII and VIII, are perspective views of parts of the valve control mechanism, the arrangement of these figures indicating the manner of assemblage in the machine.

Fig. IX, is an enlarged elevation (partly in section), showing an extractor by which any excess of fluid in the bottles may be removed; and

Fig. X, is a corresponding view from the right of Fig. IX.

Fig. XI, is a fragmentary sectional view of one of the measuring vessels with a liner inserted to reduce its capacity.

Referring, first, to Figs. I, II, and III, it will be seen that provision is made for feeding bottles through the machine in progressive succession, by means of a circular rotary table 2 mounted to revolve about a hollow post or standard 3 on the main frame 4. The bottles handled by the rotary table 2 are conveyed thereto and therefrom by means of conveyor belts 5 and 6, shown as arranged in parallelism, and are guided by fixed lateral guards 7 suitably mounted on the supports 8 underlying the belts. To facilitate filling of the bottles as presently hereinafter described, provision is made for allocating them to definite positions or stations on the table 2 and maintaining them there, as by engagement means comprising a double annular rack 9, of channel-shaped cross-section, whose flange members have a number of peripheral semi-circular or U-shaped notches 10 closely conforming to the forms of the bottles to be handled. It is preferable not to trust solely to the curved ends of the guides 7 and the pressure of that behind it for effecting transfer of each bottle between the table 2 and the conveyors 5 and 6; and I have, therefore, provided for this purpose additional means in the form of double rotary star-wheels 11 and 12 operating in step or in phase with the movement of the stations on the table 2. The star-wheel 11 tolls the bottles 1 off to the stations in a definite and positive manner as said stations come into correspondence with the conveyor 5, and the star-wheel 12 performs a similar function in reference to the conveyor 6 and the discharge of the bottles from the table. Trouble from jamming of the bottles at the star-wheels may be obviated by flexible or yielding construction of the free inner guide ends 13 and 14, which extend between the star-wheel disks and between the flanges of the bottle rack 9. As shown, the end section 13 of the guide for the approaching bottles is made as a separate piece, pivoted at 15 and yieldingly held in position by a leaf-spring 16 attached to the adjacent fixed guide member 7. The curved end 17 of the outer guide 7 insures proper pocketing of the bottles 1 in the rack 9 when filling begins, as described hereinafter. When it is desired to stop the progress of bottles to the table 2, a stop or gate

18 pivoted to one of the guides 7 may be swung across the runway formed by the parts 7 and 8. Appropriately shaped filler pieces 19, mounted adjacent the table edge in the spaces due to the curvature of the belts 5 and 6 in passing around their rolls, sustain the bottles as they are transferred between the belts and the table.

To secure the most rapid and economical operation, the filling of each bottle 1 should begin as soon as practicable after the bottle reaches its station on the filling table 2, and should end just before it is removed from the table. This involves progressively introducing the desired filling or charge (whether such as to fill the bottle completely or not) in correspondence with the normal advance of the bottle through the machine. In order, however, to insure against overfilling or wastage, etc., in case the progress of the bottles should be delayed by any occurrence out of the normal (such as a failure or slowing down of the machine drive, for example), I prefer not to rely solely on coincidence of the filling time with the time it takes for a bottle to complete its progress through the machine, but to provide for measuring or premeasuring the filling charge independently of such abnormally delayed progress. I prefer, also, to employ filling means moving with each bottle in its travel through the machine.

Still referring to Figs. I, II, and III, it will be seen that on the filling table 2 there is a tank structure 20 which comprises a main lower annular reservoir portion 21 surrounding the hollow axial standard 3, and carrying the bottle rack 9 on its outer wall, and an enlarged outwardly projecting upper portion or extension 22 overhanging the bottle stations on the outer edge of the table. The reservoir 21 contains a convenient working supply of milk, which is delivered thereto by a supply pipe 23 extending through the tank cover 24, which is mounted on a ring 25 supported from the machine frame 4 by bracket standards 26. A constant level of the working supply in the reservoir 21 is maintained by a float-valve 27 controlling the discharge from the supply pipe 23. The whole tank structure 20 revolves, of course, with the table 2.

The bottle-filling means moving with the bottles 1 is associated with the tank overhang 22, and comprises a plurality of externally shouldered conical-bottomed vessels 30 each set into the floor of the overhang directly over a bottle station with their open tops or mouths exposed through or above the overhang floor, so as to serve as outlets for delivering milk from said overhanging tank extension 22 to the bottles 1 at the stations 9 therebeneath. With a view to the measuring off of the bottle charges independently of abnormally delayed progress of the bottles,—according to the preferred mode of operation outlined above,—the float-valve 27 may be set to maintain the reservoir supply level below the bottom wall or floor of the tank overhang 22, provision being made for periodically delivering the milk to replenish the vessels 30 as required. Elevation and delivery of the milk to the overhang 22 and the vessels 30 may be accomplished by means of a rotary bucket lifter 31 (see also Fig. IV), that dips into the milk to fill its buckets. This bucket wheel 31 is carried by an inclined revolving shaft 32 mounted in bracket bearings 33 at the top of the standard 3, so as to revolve in a fixed position about an inclined axis. The scoop buckets 34 fill while immersed, move in step or in phase with the movement of the vessels 30 as they rise above the overhang floor and the vessels 30, and begin to spill freely about as they come over the latter, so as to discharge their contents into the respective vessels that are moving in coincidence and in approximate parallelism with them while they are in the upper part of their own path.

In general, I prefer not to rely on exact admeasurement or premeasuring of the bottle charge by the delivery from the buckets 34 to the vessels 30, but to make the bucket capacity somewhat excessive and to make the vessels 30 of capacity just equal to the desired charge,—as a pint, a quart, etc.,—so as to serve as accurate premeasures. This not only tends to insure full charges and greater accuracy and economy, but facilitates variation of the charges by changing the vessels and altering the speed adjustment of the machine. The surplus milk overflows the upstanding open ends of the vessels 30 and drains back into the reservoir 21 over the apron formed about the bucket mouths by the inclined floor of the overhang 22. Thus the overhanging floor or apron serves as a means of returning all excess milk to the reservoir 21 quickly and without danger of spilling.

The vessels 30 deliver into the bottles 1 beneath them through outlets in the form of discharge nipples 35 which are controlled by conical-ended valve members 36 (see Figs. I and V) hung on link-rods 37 which freely permit self-centering of the valves in the nipple seats. Swirling of the discharging milk and consequent entrainment of air therewith are prevented by means of vanes or fins 38 adjacent the outlet openings, projecting radially from the valve members 36. (See Figs. V and VI.) Each valve linkage 37 is connected to a control mechanism which is mounted on a bracket piece 39 attached to an angle iron 40 with which the upper edge of the tank structure 20 is reinforced. This control mechanism includes (see Figs. I, II, V, VII and VIII) an externally shouldered

sleeve member 41 seated in a hole in the bracket 39 (large enough to permit the valve 36 to be passed through it), and adjustably secured by a set-screw 42; a member 43, turnable in the sleeve 41, to which the linkage 37 is directly attached; and an operating mechanism for the member 43 which I shall presently describe. The sleeve member 41 has in its upper end notches or recesses 44 with rather steeply inclined cam-faces 45; and the member 43 has at its upper end projections 46 with inclined cam-faces 47 corresponding to the cam-faces 45, and co-operating with them, when the member 43 is turned one way or the other, to raise or lower the member 43 and thus open or close the filling valve 36,—the parts 41 and 43 thus constituting a vertically-acting crown cam mechanism for operating the valve 36. When the member 43 is once fully raised, its projections 46 ride on the upper end of the sleeve 41, and the valve 36 is thus securely and positively held or locked open.

The operating mechanism for the member 43 comprises a slotted crank-arm 49 secured on its upper end and an actuating lever or control member 50 fulcrumed on a stud 51 on the bracket piece 39 and having at one end an upstanding pin 52 which engages in the slot of the crank-arm 49. Rocking of the control lever 50 to a suitable extent will, therefore, either close the valve, or open it and secure it open,—according to whether the outer end of said lever 50 is shifted in the direction of the clockwise rotation of the table 2 (Fig. II), or in the reverse direction. When the arm 49 is shifted horizontally one way or the other, it also moves up or down, as the case may be.

It is, of course, preferable that the milk valves 36 be opened and closed automatically, and that they be not opened at all unless bottles 1 are actually beneath them. As shown in Fig. II, there is mounted adjacent the path of movement of the control operating mechanism and the members 50 an actuating member or device 55 in the form of a claw or dog fulcrumed about a post 56, supporting a stationary bracket 57. The outer ends of the control lever 50 have notches with inclined faces 58 adapted to engage securely with the hook or claw tooth of the dog 55 when the latter is in proper position, as indicated in dotted lines in Fig. II. Just above the bracket 57 is one arm of a bell-crank lever 60 whose shaft extends down through said bracket to the other arm 61. The arm 60 has a pin and slot connection 62 with the rear end of the dog 55, while the arm 61 normally extends into the path of the bottles at such a point as always to be actuated by wiping contact with the bottle whose control lever 50 must next pass or encounter the dog 55. By these means, therefore, the presence of a bottle 1 to be filled controls and brings about the shifting of the dog 55 into engaging position and the actuation of the corresponding control member 50 to open the valve 36 and supply milk to the bottle. As the claw tooth of the dog 55 is moving each control member 50, it rides against the inclined outer end 63 of the associated bracket piece 39 and is thereby thrown out of engagement after fully opening and securing the valve. By this means, the actuating dog member 55 is automatically retracted into inactive position after each actuation of a control member thereby; so that if there be no bottle at the next station, the corresponding filling means will not be brought into action.

The curved free end 17 of the outer guide 7 serves to restore the bottles to their proper seating in the station rack 9 if they should be slightly displaced by the wiping crank-arm 61.

As shown in Fig. II, closing of the valves 36 is brought about just before the corresponding bottles reach the table-discharging or unloading star-wheel 12, by engagement of a stationary stop arm 65, supported from the machine frame 4 adjacent the path of movement of the control operating mechanism, with the actuating crank arm 49 itself. When the crank arm 49 is thus turned sufficiently to let the inclined cam faces 47 of the projections 46 of the member 43 come upon the stationary inclined cam faces 45, the crank arm 49 descends out of engagement with the stop arm 65,—gravity aiding this descent and finally carrying the arm 49 down an amply sufficient distance. This not only closes the valves 36 preparatory to refilling of the vessels 30, but also restores the control member 50 to position to be again actuated by the dog member 55.

Thus the replenishment of the vessels 30 is effected by means quite independent of that by which the bottles 1 are filled from said vessels,—although, of course, both of these operations are dependent on the continued operation of the machine by the drive shaft 81. Such independence allows the vessels to be always replenished and ready to fill bottles at each revolution of the table 2, whenever bottles are present at the filling stations, while, at the same time, it allows the actual delivery of filling to the bottles to be made dependent on their presence.

As shown in Figs. IX and X, the ordinary milk bottle has in its mouth a shoulder 70 which serves as a seat for the usual paper disk cap or stopper closure. It is undesirable that the milk in the bottle should stand above this seat 70, since such a condition leads to sloppy and unsightly capping. Commercial milk bottles, however, vary somewhat in capacity, so that to insure against bad results in capping it is necessary to bring the milk level to a definite

proper height with reference to the bottle mouth.

Referring, now, to Fig. III, it will be seen that as each bottle 1 is transferred by the star-wheel 12 it passes beneath a stationary milk-removing device 71 mounted on the hollow axis 73 of this star-wheel. As shown in Figs. IX and X, this device comprises a bent tubular arm 74 pivoted to a bracket 75 on the upper end of the axis or standard 73 and counterweighted at 76 to ease engagement with the bottle mouths,—downward movement being limited by a stop 770 on the bracket. One end of this tube 74 extends down into the standard 73 to discharge thereinto, while its other end constitutes a substantially vertically moving suction nozzle with curved or arc-shaped gauge-fins 77 adapted to control the action of the nozzle through engagement with the bottle-mouth, so as to remove any excess of milk. The gauged nozzle 77 overlies the path of the bottles 1, in position to engage and wipe over them as they pass it under the impulsion of the star-wheel 12. A suction or aspirating action is produced on the injector-principle, by a blast of air from a nozzle 78 connected by a tube 79 to any suitable source of air pressure.

Referring, now, to Figs. I, II, and III, once more, it will be seen that power to operate the machine is received by a pulley 80 on a main shaft 81 journalled in bearings on the main frame 4. The table 2 is rotated by means of a large gear 82 secured beneath it and meshing with a pinion 83 at the uper end of a vertical shaft 84 driven from the shaft 81 through worm gearing 85. The conveyor belt 5 is driven by a roll 86 which, in turn, is driven through a sprocket chain drive 87 from a short horizontal shaft 88 itself driven from the shaft 81 through bevel gearing 89, see Figs. I and III. The drive of the conveyor belt 6 does not appear on the drawing and requires no description, since this belt 6 need not (like the belt 5) operate with any particular speed relation to the bottle handling parts of the machine proper,—all that is required of it being to carry away the filled bottles 1 from the machine. The star-wheels 11 and 12 are belted together by a chain drive 90, and the upright shaft 91 of the wheel 11 is driven directly from the shaft 81 through bevel gearing 92. The inclined shaft 32 of the elevator bucket wheel 31 is driven through bevel gearing 93 from a vertical shaft 94 that extends up through the center of the standard 3, and is itself driven from the shaft 81 through worm gearing 95. A gutter 96 beneath the edge of the table 2 serves to carry off any drippings of spilt milk.

Since in the machine shown the table 2 has thirty-six bottle stations and the wheel 31 has nine buckets, the wheel 31 should make three revolutions for each revolution of the table. For filling quart bottles, the latter may run as fast as two revolutions a minute, giving an output of seventy-two bottles filled every minute.

For pint bottles, the capacity of the vessels 30 may be diminished to pint size by insertion of liners 100, as indicated in Fig. XI, to serve as displacement means for this purpose.

It will be seen that in the operation of the machine, the supply of milk to the series of revolving vessels 30 is effected within their orbit and that of the bottles 11, which are carried around with them in their movement, and the return of milk to the supply in the reservoir 21 likewise takes place within the orbit of vessels and bottles. Under all conditions of capacity variation of the vessels 30, definitely excessive amounts of milk may be delivered to the successive vessels, so as to assure complete filling and overflow in every instance.

Having thus described my invention, I claim:

1. In a filling machine, the combination with means for feeding bottles through the machine in progressive succession, and open topped vessels for premeasuring charges for the bottles by overflow of excess filling and progressively introducing such charges into the bottles during their advance through the machine; of means for replenishing the premeasuring vessels independently of the aforesaid charge-introducing means, and means responsive to wiping contact with a bottle to be filled for controlling the action of the said charge-introducing means.

2. In a filling machine, the combination with means for feeding bottles through the machine in progressive succession, and an open topped valved vessel movable with each bottle in its travel for progressively filling it; of means independent of the valve of said vessel for replenishing said vessel for each bottle to be filled therefrom with overflow of excess filling; and means controlled by wiping contact with a bottle to be filled for opening said valve after replenishment of the vessel as aforesaid.

3. In a filling machine, the combination of means for feeding bottles through the machine in progressive succession; a vessel moving with each bottle in its travel for progressively filling it in correspondence with its normal advance through the machine; a supply reservoir for the filling at a lower level than said vessel; and a bucket lifter for replenishing the vessels from said supply reservoir dipping therein to fill its buckets and moving in phase with the movement of said vessels, so as to discharge the contents of its buckets at the proper time.

4. In a filling machine, the combination of means for feeding bottles through the ma-

chine in progressive succession; a vessel moving with each bottle in its travel for progressively filling it; a supply reservoir for the filling at a lower level than said vessel; and a bucket-wheel lifter for replenishing the vessels from said supply reservoir dipping therein to fill its buckets and revolving about an inclined axis in phase with the movement of said vessels, so as to spill the contents of its buckets into the latter while said buckets are in the upper part of their path.

5. In a filling machine, the combination of means for feeding bottles through the machine in progressive succession; an open-topped vessel moving with each bottle in its travel for progressively filling it; a supply reservoir for the filling at a lower level than said vessels; means for elevating the filling from said supply reservoir to replenish the vessels; and means for returning to said reservoir filling overflowing said vessels.

6. In a machine of the character described, the combination of a moving series of open vessels for delivering filling, with means for carrying bottles to be filled along with said vessels in their movement; a source of supply of filling at a lower level than said vessels; means for supplying an excess of filling from said source to said vessels in succession; and means for returning overflow from the vessels to the supply.

7. In a machine of the character described, the combination of a moving series of open vessels for delivering filling, with means for varying their capacities, and means for carrying bottles to be filled along with said vessels in their movement, a source of supply of filling at a lower level than said vessels; means for supplying filling from said source to said vessels always in excess of their capacities, so as to cause them to overflow; and means for returning the overflow to the supply.

8. In a machine of the character described, the combination of a revolving series of open measuring vessels for delivering filling, with means for carrying bottles to be filled around with said vessels in their movement; a source of supply of filling at a lower level than said vessels; means within the orbit of the vessels for supplying filling from said source to replenish them; and means for returning overflow from the vessels to the supply.

9. A rotary filling table comprising a tank structure with a main lower portion and an upper overhanging portion, and filling stations for bottles around said main portion beneath the tank overhang; means for elevating filling from said lower portion to said overhang; and means for delivering filling from said overhang to the bottles at the aforesaid stations.

10. In a filling machine, the combination of a rotary table having thereon a filling tank structure with a main lower reservoir portion and an upper overhanging portion, and a plurality of bottle stations around said main reservoir portion of said tank structure and beneath said overhanging portion; a measuring vessel for filling the bottle at each station associated with said tank overhang with its open top exposed through the floor thereof; and means for periodically delivering to said vessel from said reservoir a quantity of filling in excess of its capacity.

11. In a filling apparatus, the combination of an open topped or mouthed vessel with a bottom outlet for delivering to a bottle therebeneath, a supply reservoir for the filling at a lower level than said vessel, means for elevating the filling from said supply reservoir above said vessel and discharging the same into its open mouth, and an apron about the mouth of said vessel for receiving and draining any excess of filling so elevated back into said reservoir.

12. In filling apparatus, the combination of means for feeding bottles; means moving with the bottles in their travel for supplying filling thereto, including horizontally rocking and vertically reciprocating control members; and stationary actuating means for said control members adjacent their path of movement, including an actuating member shiftable into position to engage said control members and means controlled by the presence of a bottle to be filled for so shifting it.

13. In a filling machine, the combination of means for feeding bottles through the machine in progressive succession; means moving with the bottles in their travel for supplying filling thereto, including rocking control members; stationary actuating means for said control members adjacent their path of movement, including an actuating member shiftable into position to engage said control members and means controlled by the presence of a bottle to be filled for shifting said actuating member into engaging position; and means moving with said rocking members for automatically retracting said actuating member into inactive position after each actuation of a control member thereby.

14. In filling apparatus, the combination of means moving with bottles to be filled for supplying filling thereto including a control-operating mechanism with an arm horizontally shiftable to actuate said mechanism and moving up or down when so shifted one way or the other; means adjacent the path of movement of said operating mechanism for engaging and shifting said arm one way and thereby causing it to move vertically out of engagement with said means; and means including a device adjacent the path

of movement of said operating mechanism for shifting said arm the other way.

15. In filling apparatus, the combination of an outlet for delivering to a bottle therebeneath, a valve for controlling said outlet, and a vertically acting crown-cam mechanism thereabove for operating said valve, with means for locking said valve open.

16. In a filling machine, the combination of means for feeding bottles through the machine; means for filling the bottles with liquid during such movement; and means controlled by the bottle mouth for removing any excess of filling to bring the level of filling in each bottle to a proper height therein.

17. In a filling machine, the combination of means for feeding bottles through the machine; means for filling the bottles during such movement; and means controlled by the bottle mouths for sucking off any excess of filling to bring the level thereof in each bottle to a proper height therein.

18. In a filling machine, the combination with means for feeding bottles through the machine, and means for filling the bottles during such movement, of a suction nozzle for removing any excess of filling from the bottles, and gauge means associated with said nozzle for engaging the bottle mouths to control the action of said nozzle.

19. In a filling machine, the combination with means for feeding bottles through the machine, and means for filling the bottles during such movement, of a vertically-movable downward-biased suction nozzle with curved gauge fins overlying the path of the bottles, in position to engage and wipe over the bottle mouths and remove any excess of milk.

20. A bottle filler comprising a charge measuring vessel with a discharge opening in its bottom; a valve member controlling said opening; and a plurality of radial vanes in the vessel carried by said valve member for preventing swirling of the outflowing liquid and consequent entrainment of the air therewith.

In testimony whereof, I have hereunto signed my name at Philadelphia, Pennsylvania, this 17th day of March, 1920.

SAMUEL M. HEULINGS.

Witnesses:
JAMES H. BELL,
E. L. FULLERTON.