March 20, 1934. O. S. PETERS 1,951,578

OSCILLOGRAPH GALVANOMETER

Filed April 10, 1931

Fig. 1.

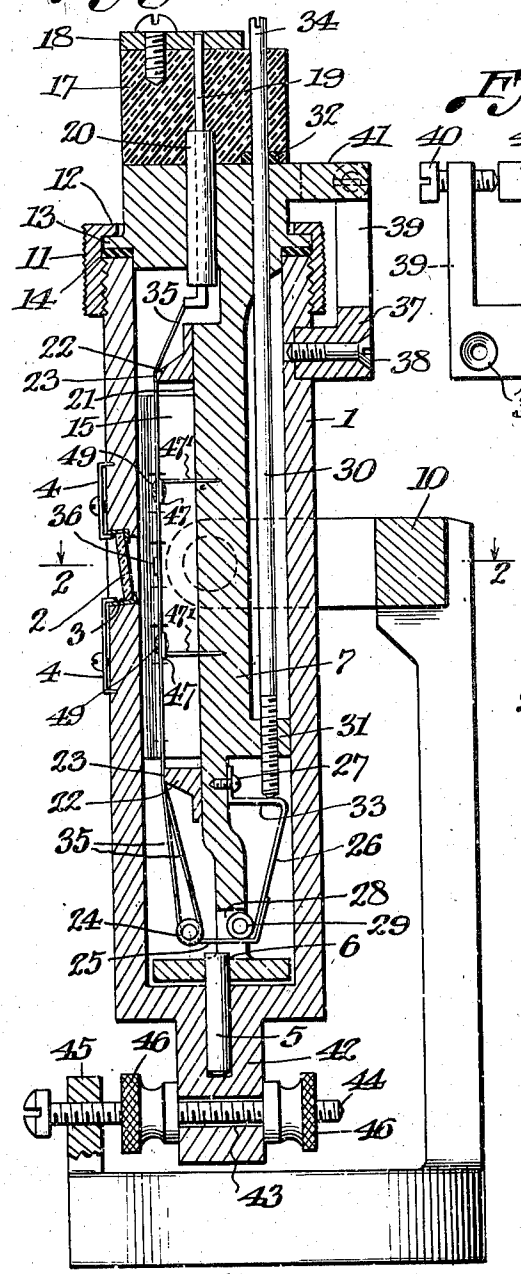

Fig. 3.

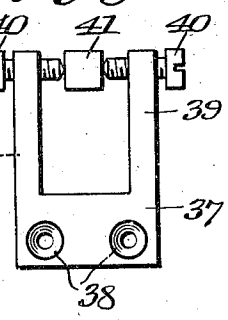

Fig. 5.

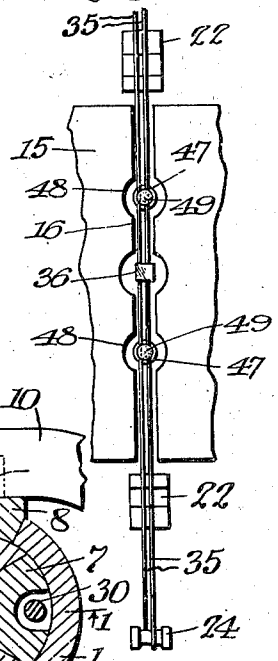

Fig. 2.

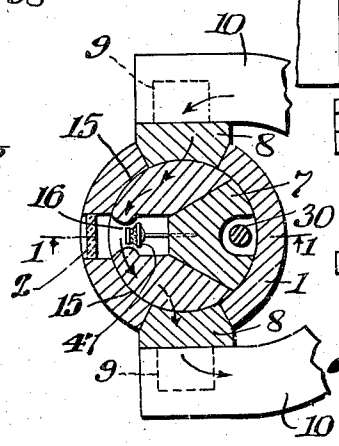

Fig. 4.

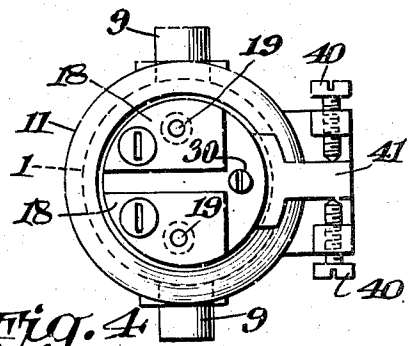

Inventor:
Orville S. Peters;
Raymond Jones
Attorney

Patented Mar. 20, 1934 1,951,578

UNITED STATES PATENT OFFICE

1,951,578

OSCILLOGRAPH GALVANOMETER

Orville S. Peters, Chevy Chase, Md.

Application April 10, 1931, Serial No. 529,245

14 Claims. (Cl. 171—95)

My invention relates to improvements in oscillograph galvanometers of the type which utilize a moving filament and stationary magnet. In the following description, I confine myself to the particular kind of galvanometer used in the electric oscillograph for recording varying electrical currents photographically upon film in motion, but my improvements are applicable to other kinds of galvanometers having a moving coil and stationary magnet. The general form of galvanometer utilized in the oscillograph is well known, but in order to make the nature of my improvements clear it may be described as follows: A relatively long gap of small cross-sectional area is provided between the poles of a magnet, at each end of which is mounted a bridge formed from insulating material which has one surface coincident with the axis of and lying in the direction of the magnetic field of the gap. On each side of the axis and parallel with it, a slot is formed in the surface of each bridge with a thin fin of the insulating material separating the two adjacent slots. From suitable insulated electric terminals mounted near one end of the gap, a suspension wire or strip of metal is strung by soldering the ends of the suspension to the terminals, passing it through the slots in the bridges and around a pulley mounted upon a spring tension device near the opposite end of the gap. A silvered glass mirror is cemented to the wire at a position midway between the bridges of insulating material. The combination of magnet gap, insulating bridges, wire or strip, and mirror is commonly mounted in a well or container for damping liquid and the container is provided with a glass window for ingress and egress of a beam of light to the mirror.

In practical operation for the purpose of measuring electrical currents, the current is passed through the loop of wire or strip from terminal to terminal, which causes the mirror to deflect the beam of light by an amount which, for relatively small angles, is proportional to the current. This deflection is pursuant to the well-known laws of electro-magnetism.

In practical use, it is necessary to make certain adjustments, and it is desirable in many cases to place a large number of elements within a relatively small containing case and before a single strip of recording film, wherefor, (1) it is necessary to rotate the reflected beam of light from the mirror by turning the element manually to properly place the beam of light upon the photographic film without changing the relationship of the mirror and suspension to the sides of the magnet gap through which it passes; (2) in order properly to adjust the sensitivity of the instrument, it is necessary to provide means for adjusting the tension on the wires which shall not be subject to variation from handling and shall be accessible at all times from the outside of the enclosing case; (3) the entire element must be enclosed to protect it from outside interference and to provide a container for damping liquid which can be hermetically sealed; (4) means must be provided for ready removal and repair of the element; and (5) the space occupied must be minimized.

The objects of my invention are (1) to provide a means whereby the mirror can be turned manually to effect adjustment of the beam of light without changing the relationship of the mirror and suspension to the magnet gap in which they are placed and without the necessity of at the same time rotating the entire body of the magnet; (2) to provide means whereby the tension upon the strip can be accurately adjusted and maintained without removing the moving system from the magnet or from its enclosing case, and without leakage of fluid in any position; (3) to provide means for encasing the element within a minimum transverse space and within a hermetically sealed case for containing damping fluid; and (4) to provide means whereby the damping fluid, which absorbs light from the mirror when permitted between the glass window and mirror, can be removed from the containing case and damping means in the form of oil drops substituted, leaving clear the space between window and mirror, whereby relatively weak sources of illumination can be used if required by existing conditions.

I attain these objects and others by means of the construction illustrated in the accompanying drawing, wherein

Figure 1 is a longitudinal cross-section of the assembled element on the line I—I of Fig. 2;

Fig. 2 is a transverse cross-section of the assembled element on the line 2—2 of Fig. 1;

Fig. 3 is a detail view of an adjusting means;

Fig. 4 is a plan view of the top of the element; and

Fig. 5 is a front elevation of the gap showing the mirror and damping rings in their respective enlargements of the gap.

Referring to the drawing in detail, and particularly to Fig. 1, my improved galvanometer comprises a main casing constructed in the form of a tube 1 which is made of non-magnetic material. A plano-convex lens 2 is mounted within an open-

ing formed in the wall of the tube at a central point on the front portion thereof. The bottom of the opening slopes downwardly relatively to the axis of the tube and the lens is retained within the opening by means of a cement 3 which is insoluble in oil, and additional retaining means are provided in the form of spring clips 4 which are affixed to the tube by means of screws.

A pivot pin 5 is inserted axially in the bottom of the tube and engages with its upper end within a recess 6 formed in the lower portion of a core element 7 to provide a bearing which will maintain the core and tube concentric and permit rotary adjustments of the core. Within recesses formed in the sides of the tube, are affixed a pair of main iron pole pieces 8, the inner faces of which are curved to conform to the inner surfaces of the tube 1. The joints between the pole pieces and the tube are made leak proof by means of soldering. The outer surfaces of the pole pieces 8 are formed plane and parallel to each other and each outer surface is provided centrally thereof with an integral trunnion 9. The trunnions are rotatably supported within circular bearing recesses which are formed within the ends of a U-shaped magnet 10. The parts are so disposed that the axis of the trunnions 9 is at right angles to the axis of the tube 1 and at the same elevation as the center of the lens 2 and parallel to the plane thereof. The core 7 is secured within the tube 1 by means of a cap 11 which is threadably engaged with the top of the tube. A circular flange 12 formed on the cap 11 engages a flange 13 formed on the core, thereby permitting the flange to be forced into engagement with a gasket 14 arranged in position on the upper end of the tube whereby to provide a seal.

The core 7 is formed of non-magnetic material and is provided with auxiliary iron pole pieces 15 affixed thereto with solder and extending longitudinally to coincide with the main pole pieces 8. The auxiliary pole pieces are extended forwardly to provide a narrow gap 16 therebetween so shaped as to concentrate as much as possible the magnetic field of the magnet. The path of the principal portion of the magnetic field is indicated by the arrows.

A cylindrical insulating cap 17 is mounted on the upper end of the core 7 and supports a pair of metal terminal pieces 18 from which are extended a pair of electrical conductors 19 through insulating bushings 20 to a point within the tube 1. The bushings 20 are set in shellac to prevent any leakage of oil.

Upon the front narrow face 21 of the core, are mounted two bridges 22 which are made of insulating material and which terminate in narrow surfaces 23 positoned coincident with the axis of the gap 16. A pair of slots are formed in each surface 23, the adjacent slots being separated by a thin fin of the bridge material. A pulley 24 formed of insulating material is mounted upon a flexible metal arm 25 which in turn is affixed to a flat metal spring 26 secured at its upper end to the core by a screw 27. The arm 25 projects through a narrow slot 28 formed in the core and contacts a roller 29 supported within the slot 28 whereby to permit the arm to move on the roller with a minimum of friction. A metal rod 30 extends through the cap 17 and core and its lower end is threaded to engage a correspondingly threaded opening formed in a lug 31 which extends from the core. A gasket 32 of flexible compressive material such as cork surrounds the rod 30 and is designed to prevent leakage of oil at this point. The lower end of the rod engages a flat portion 33 on the spring 26. The upper end of the rod is provided with a recess 34 adapted to receive a tool, whereby the rod may be rotated to be adjusted up or down to vary the position of the spring 26 and in turn the position of the pulley 24.

A galvanometer suspension 35 which may be formed of any suitable wire or flat strip is soldered at its free ends to the conductors 19 and is threaded through the slots in the bridges 22 and around the pulley 24. The usual oscillograph mirror 36 is cemented to the suspension at a position in rear of the lens 2 parallel to the strip. The path of the current is from one terminal 18 to the attached conductor 19, thence through the loop of the suspension 35 to the other conductor 19 and terminal 18.

A yoke 37 is attached adjacent the upper end of the tube 1 by means of soldering and by screws 38 and the upper end of the yoke terminates in spaced lugs 39, each of which carries an adjusting screw 40. The screws 40 engage on opposite sides of an arm 41 which extends integrally from the upper end of the core 7. By this construction, rotational adjustment of the core may be secured by proper rotation of the screws 40.

From the bottom of the tube 1, an arm 42 is extended and is provided with a bore 43 which receives a threaded rod 44 that extends from a support 45. Two nuts 46 are threaded on the rod 44 and engage opposite sides of the arm 42. By adjusting the position of the nuts 46 the tube 1 may be tilted around the trunnions 9 to shift a reflected beam of light from the mirror 36 in a vertical plane.

Where sufficient illumination is available, damping is secured by filling the case 1 with a suitable mineral oil, but where relatively weak sources of illumination must be employed on account of existing conditions, suitable damping is provided and the absorption of light due to the presence of damping liquid between the lens window 2 and the mirror is avoided by the interposition of damping rings 47 placed between the poles 15 in enlargements 48 of the gap 16. These rings are formed from metal wire and are placed close to the suspension 35 supported preferably on pins 47' which engage the core 7. The rings 47 and suspension 35 for a short distance, are coated with shellac. A drop of oil 49 placed in each ring 47 contacts the suspension 35 and, due to its surface tension, embraces the suspension for a short distance and on account of its viscosity tends to prevent free oscillation of the suspension when an impulse due to an electrical current is imparted. For practical purposes, this form of damping is effective and useful in many cases. The shellac on the rings 47 and suspension 35 prevents the oil from creeping over the adjacent surface on account of the tendency of shellac to resist wetting of its surface by oil.

The advantages which are apparent from the use of the foregoing described oscillograph element are, first, economy of space, permitting in practical application the use of one element per inch of film width to as great widths as it is practicable to make photographic film; second, core 7 and pole pieces 15—15 are in rigid relation at all times with supports 19, 22 and 24 of suspension 35 so the entire core 7 and its affixed parts can be rotated within the tubular case 1, or removed therefrom and reinserted without destroying the adjustment of loop 35 in rela-

tion to the gap 16 and without danger of breakage of the loop. Third, the spring adjustment of the tension of the loop through pulley 24, arm 25, spring 26 and rod 30 is positive and with inappreciable friction due to the interposition of roller 29. The inertia of the movable part of the adjustment, viz., pulley 24, arm 25 and spring 26 is small since the rod 30 is restrained by the thread thereon from imposing its weight upon loop 35. Hence, the danger of breakage due to jarring or dropping is minimized. Fourth, when assembled, the case is hermetically sealed, but with a gasket 14 only which needs to be renewed but occasionally, and permits the ready removal of core 7 with its affixed parts for repair or examination by unscrewing the cap 11.

While I have disclosed a preferred form of my invention for the purpose of its illustration, I do not wish to be limited thereto. Other forms are contemplated within the scope of the appended claims.

What I claim is:

1. A measuring instrument comprising a vibratory element, a supporting member adjacent said element, and a body of fluid suspended on said member in contact with a portion only of said element.

2. A measuring instrument comprising a vibratory element, means on said element to indicate the vibrations thereof, and means for damping said element, said means contacting said element along a small portion only thereof displaced from said first-named means and from the ends of said element.

3. A measuring instrument comprising a vibratory element, a fluid body for damping said element, means for supporting said body in contact with said element along a small portion thereof, and a coating on said element for decreasing the adhesion between the fluid body and the element.

4. A galvanometer comprising a vibratory element, a support adjacent said element, a damping body in contact with said element and suspended from said support.

5. A measuring instrument comprising a vibratory system, a part of said system being utilized to indicate the vibrations thereof, damping means engaging said system at a plurality of points, said points being on opposite sides of said part.

6. A galvanometer comprising a vibratory element, spaced pole pieces forming an air gap, a plurality of supports associated with said pole pieces adjacent said gap, and a body of fluid suspended from each of said supports in contact with said element.

7. A galvanometer element comprising a support, a casing for said support, a vibratory filament, a leaf spring mounted at one end on said support and connected at its opposite end to said filament for applying a tension thereto and adjustable means for engaging said spring intermediate its ends and extending through said casing.

8. In a galvanometer, a support, a casing for said support, a leaf spring mounted at one end on said support, a filament connected at one end to said support and at its opposite end to the free end of said spring, and adjustable means engaging said spring intermediate its ends for varying the position of the free end of said spring to vary the tension of said filament.

9. In an instrument, a galvanometer element, an annular flange on the element, a casing provided with an opening to receive the element, a surface of the casing substantially coinciding with the flange when said instrument is assembled, a gasket between said flange and surface, threads on said casing, a threaded member surrounding said flange and adapted to cooperate with the threads on said casing to urge the flange toward said surface, whereby said opening is effectively sealed, a yoke secured to said casing, an extension on said element positioned within the arms of the yoke, and means for moving the extension relatively to the yoke to rotate said element relatively to the casing.

10. In a galvanometer, a fluid tight casing, a galvanometer element rotatably mounted within said casing, said element provided with spaced magnetic pole shoes forming an air gap, said casing being provided with a magnetic portion forming a pole piece opposite each pole shoe on the element, and means for rotating said element and shoes about a vertical axis to displace said shoes and magnetic portions relatively in a horizontal plane.

11. In a galvanometer, a casing, spaced wall portions of said casing formed from magnetic material to provide a pair of main pole pieces, a magnet associated with said casing, the pole pieces of said magnet being arranged in line with said main pole pieces, a galvanometer element supported within said casing, said element being provided with a pair of auxiliary spaced magnetic pole pieces arranged in alignment with said main pole pieces and magnet pole pieces and being rotatable about a vertical axis to displace said main pole pieces relatively to said auxiliary magnetic pole pieces.

12. In a galvanometer, a casing, spaced wall portions of said casing being formed from magnetic material to provide a pair of main pole pieces, a magnet associated with said casing with the pole pieces of said magnet adjacent said main pole pieces, and means for pivotally connecting said main pole pieces to said magnet pole pieces.

13. In an oscillograph, a support, a vibratory filament mounted on said support, a leaf spring mounted at one end on said support and connected at its opposite end to said filament for applying a tension thereto and adjustable means engaging said spring for bending the spring to vary the tension of said filament.

14. A galvanometer element comprising a support, a filament, a leaf spring mounted at one end on said support and connected at its opposite end to one end of said filament for applying a tension thereto, a roller mounted on said support and engaging said spring intermediate its ends, and means for bending said spring whereby to cause portions of the same to move over said roller to vary the tension in the filament.

ORVILLE S. PETERS.