(No Model.)

B. F. BEARD.

MEASURING FAUCET.

No. 590,491. Patented Sept. 21, 1897.

FIG. 1.

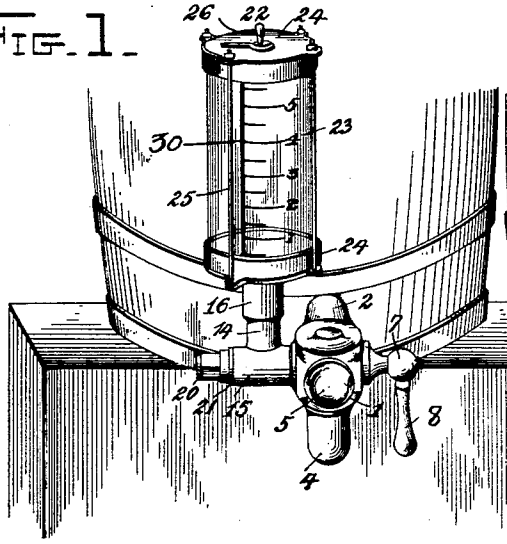

FIG. 2.

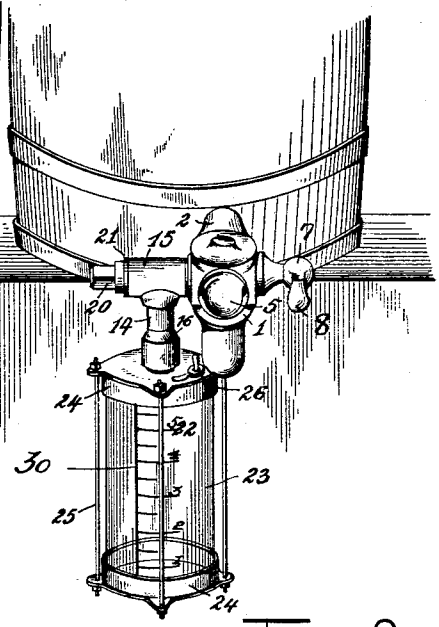

FIG. 4

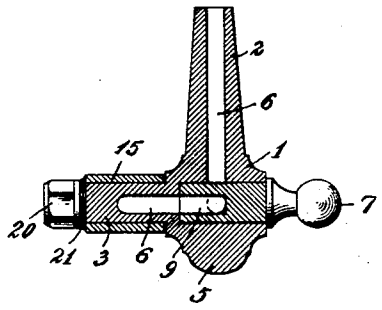

FIG. 3.

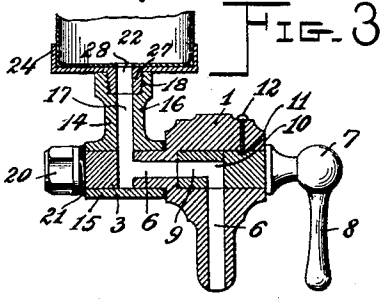

FIG. 5.

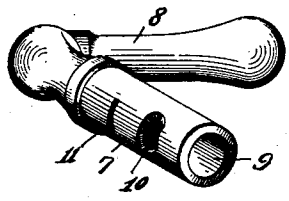

Witnesses
John F. Dewhirst.
Edwin Cruse.

Inventor
Benjamin F. Beard.

By his Attorneys,
C. A. Snow & Co.

THE NORRIS PETERS CO., PHOTO-LITHO., WASHINGTON, D. C.

UNITED STATES PATENT OFFICE.

BENJAMIN F. BEARD, OF PINE BLUFF, ARKANSAS, ASSIGNOR OF TWO-THIRDS TO ALPHONSE BREWSTER AND O. F. BREWSTER, OF SAME PLACE.

MEASURING-FAUCET.

SPECIFICATION forming part of Letters Patent No. 590,491, dated September 21, 1897.

Application filed May 21, 1897. Serial No. 637,565. (No model.)

To all whom it may concern:

Be it known that I, BENJAMIN F. BEARD, a citizen of the United States, residing at Pine Bluff, in the county of Jefferson and State of Arkansas, have invented a new and useful Measuring-Faucet, of which the following is a specification.

This invention relates to measuring-faucets, the object being to provide a simple, cheap, and efficient device of this character in which the measuring vessel is pivotally connected to the faucet in such manner that it may be swung either above or below the faucet and be thereby inverted, by which means the entire contents of the barrel or other containing vessel may be drawn off through the measuring vessel.

With these and other objects in view the invention consists in the several details of construction and combination of parts, as will be hereinafter fully described, and particularly pointed out in the claims.

In the drawings, Figure 1 is a perspective view of a portion of a barrel with my improved measuring-faucet attached thereto and showing the measuring vessel supported above the faucet. Fig. 2 is a similar view showing the measuring vessel supported below the faucet. Fig. 3 is a vertical transverse section through a portion of the measuring vessel and the faucet. Fig. 4 is a horizontal section through the faucet. Fig. 5 is a perspective view of the turn-key detached.

Similar reference-numerals indicate similar parts in the several figures.

The faucet consists of the body portion 1, the stem 2, adapted to be fitted into a barrel or other vessel, a side extension 3, which is integral with the body, and a discharge-nozzle 4, which preferably tapers toward its outer end. A boss 5 is formed on the front end of the body to increase the thickness of the metal at its point, and this boss is intended to receive the impact of a mallet or similar device when the stem of the faucet is driven into a barrel.

The body of the faucet is provided with a bore 6, which extends from one side thereof transversely through the body and into the side extension 3, and this bore 6 intersects the bore of the stem 2 and the discharge-nozzle. A key 7 is supported in the bore 6 and is provided with a handle 8, by means of which it may be turned. The key is provided with a bore 9, which extends into it longitudinally, and with an opening 10, which extends from its periphery on one side into the key to communicate with the bore 9. This opening 10 is adapted to be brought into register with the bore of the stem 2 or with the bore of the discharge-nozzle 4 by turning the key in the proper direction.

11 indicates a groove formed in the periphery of the key and extending around it about three-fourths of its circumference.

12 indicates a screw which is fitted into the body of the faucet and projects into the groove 11 to hold the key in position within the bore 6 and also to limit the rotary movement of the key.

The side extension 3 is provided with a transverse bore which intersects the bore 6.

14 indicates a T-shaped coupling having a sleeve portion 15 to fit over the side extension 3 to turn thereon. The coupling also has a shank 16, which is bored out, as indicated at 17, and is exteriorly threaded at its outer end, as indicated by 18. The outer end of the extension 3 is threaded to receive a nut 20, which is designed to hold the T-shaped coupling 14 in position on the extension, and 21 is a washer, of leather or other suitable material, which is interposed between the nut 20 and the end of the sleeve 15 to prevent any leakage at this point.

The measuring vessel is indicated by 22 and consists of a glass cylinder 23 and heads 24, which may be of wood or metal, as preferred, and the bolts 25, which clamp the two heads together and hold the cylinder firmly in position between them. Each of the heads 24 is provided with an ordinary thumb-screw valve 26 for the purpose of venting the measuring vessel in order that the fluid may flow freely into or out of the vessel. One of the heads 24 is provided with a projecting boss 27, which is bored out to form a passage from the interior of the measuring vessel, as indicated at 28, and the outer end of this bore is internally threaded in order that it may be screwed onto the threaded end 18 of the shank 16, and thereby firmly secure the measuring

vessel to the T-shaped coupling 14. It is evident, therefore, that the vessel may be swung around on the side extension 3 to occupy either of the positions indicated in Figs. 1 and 2, or, if necessary, any position intermediate the two extremes. The measuring vessel is provided with two scales (indicated by 30) on opposite sides, and these scales are so arranged that the quantity of fluid within the measuring vessel will be indicated when the vessel occupies either of the two positions shown in Figs. 1 and 2.

In operation the faucet will be secured in the barrel or other containing vessel, and as long as the fluid within the barrel is higher than the top of the measuring vessel the latter can retain the position shown in Fig. 1, and by turning the key to the proper point the fluid will flow from the barrel into the measuring vessel, and then by turning the key to the proper position to cause the opening 10 to register with the discharge-spout the contents will flow from the measuring vessel into the receiving vessel. When, however, the fluid in the barrel gets below the top of the measuring vessel, in order to fill the measuring vessel it must be swung down to the position shown in Fig. 2, when the fluid will flow into it, and after the desired quantity is in the measuring vessel the vessel must be turned up to the position shown in Fig. 1 in order to discharge its contents into the receiving vessel. It will thus be seen that practically the entire contents of the containing vessel can be drawn from it and discharged into the receiving vessel through the measuring vessel.

It will be understood that changes in the form, proportion, and minor details of construction may be resorted to without departing from the spirit or sacrificing any of the advantages of this invention.

Having thus described the invention, what I claim is—

1. The combination with a faucet having a lateral extension intermediate its ends provided with a horizontal bore, and a key fitted in said faucet to intersect its longitudinal bore and establish communication with said horizontal bore in the extension and the longitudinal bore of the faucet on either side of the key, said extension having also a vertical bore extending through it and intersecting its horizontal bore, combined with a measuring-faucet pivotally connected at one end on said extension and provided with a passage leading from its interior and adapted to communicate with either end of the vertical bore in said lateral extension, substantially as and for the purpose specified.

2. The combination with a faucet having a lateral extension intermediate its ends and provided with a horizontal bore opening out of the side opposite the said extension and extending longitudinally into said extension and intersecting the longitudinal bore of the faucet, said extension having a vertical bore extending through it and intersecting its horizontal bore, and a key seated in said horizontal bore in the faucet and having a longitudinally-extending bore communicating with the horizontal bore in the extension, said key having also a side opening communicating with its longitudinal bore and adapted to be registered with the longitudinal bore of the faucet on either side of the key, combined with a sleeve fitted on the side extension to turn thereon and inclosing the vertical bore therein, a measuring vessel attached to the sleeve and provided with a passage leading from its interior and adapted to communicate with either end of the vertical bore in said extension, substantially as and for the purpose specified.

In testimony that I claim the foregoing as my own I have hereto affixed my signature in presence of two witnesses.

BENJAMIN F. BEARD.

Witnesses:
M. P. RUSSELL,
H. B. RUSSELL.