W. H. DANIELS.

VALVE.

APPLICATION FILED NOV. 11, 1912.

1,134,109. Patented Apr. 6, 1915.

Fig. 1.

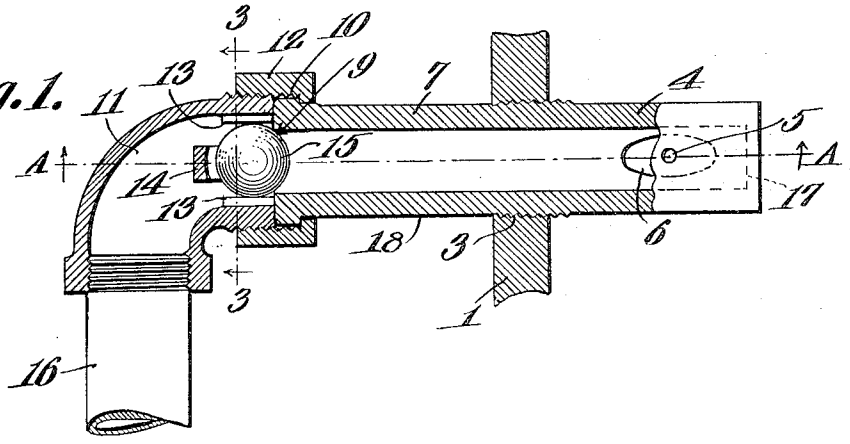

Fig. 2.

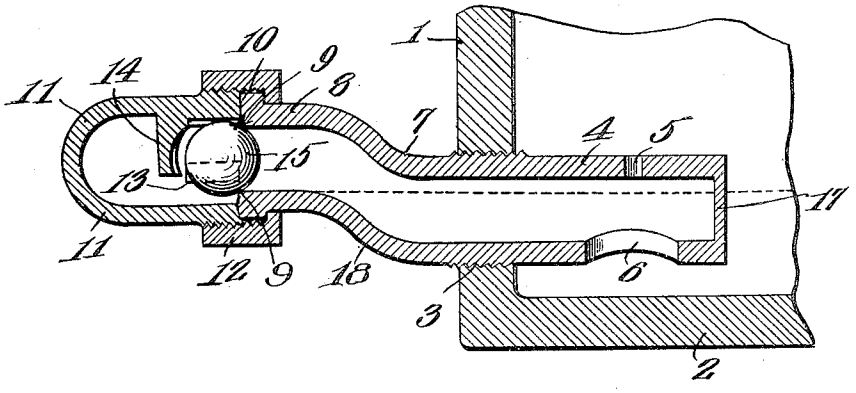

Fig. 3.

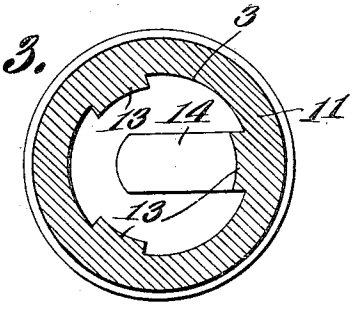

W. H. Daniels,
Inventor

Witnesses
J. P. Gomein
S. Willson

by C. A. Snow & Co.
Attorneys

THE NORRIS PETERS CO., PHOTO-LITHO., WASHINGTON, D. C.

UNITED STATES PATENT OFFICE.

WALTER H. DANIELS, OF SAVANNAH, GEORGIA.

VALVE.

1,134,109. Specification of Letters Patent. **Patented Apr. 6, 1915.**

Application filed November 11, 1912. Serial No. 730,742.

To all whom it may concern:

Be it known that I, WALTER H. DANIELS, a citizen of the United States, residing at Savannah, in the county of Chatham and State of Georgia, have invented a new and useful Valve, of which the following is a specification.

The device forming the subject matter of this application is a radiator valve and one object of the invention is to provide novel means whereby through a superficial inspection of the outer end of the valve tube, the position of certain openings in the inner end of the valve tube and normally housed within the radiator, may be ascertained.

Another object of the invention is to provide novel means whereby the water seal will be retained.

With the foregoing and other objects in view which will appear as the description proceeds, the invention resides in the combination and arrangement of parts and in the details of construction hereinafter described and claimed, it being understood that changes in the precise embodiment of the invention herein disclosed can be made within the scope of what is claimed without departing from the spirit of the invention.

In the drawings accompanying this specification and forming a part thereof:—Figure 1 is a plan view partly in section of my improved valve in position upon a radiator. Fig. 2 is a section view taken on the line A—A of Fig. 1, and Fig. 3 is a sectional view taken on the line 3—3 of Fig. 1.

Referring to the drawings in which similar reference numerals designate corresponding parts throughout the several views, 1 is the side wall of a radiator and 2 the bottom thereof. The side wall 1 is provided with the threaded opening 3 which opening is located as is usual in radiator construction adjacent the bottom 2. The location of this opening is such that it is impossible for any large amount of water to collect within the radiator. Threadedly engaging the sides of the opening 3 is a tube 18 the portion 4 of which extends within the radiator and is provided with the end wall 17. The portion 4 is provided with the openings 5 and 6 in the side walls thereof, the opening 5 being a relatively small one and provides for the escapement of the air from the radiator. Diametrically opposite the opening 5 is the somewhat larger opening 6 which opening allows the water of condensation in the radiator to pass therethrough and thereby prevents any great accumulation of water within the radiator proper. The tube 18 which threadedly engages the opening 3 extends outwardly from the radiator wall a short distance and is then bent upward as at 7 and then horizontally as at 8. The tube is provided at its outer end with the ball valve seat 9 and a shoulder 10 which is engaged by a union 12.

An elbow 11 threadedly engages the union member 12 and is provided with an air and water outlet pipe 16 which communicates with the return system of the radiator. This elbow 11 is provided with runways for a valve ball 15. The runways are formed of three outstanding projections 13, and in order to limit the movement of the ball a stop 14 is provided which prevents the ball from escaping from the ball run-ways and into the return pipe 16, this stop 14 consisting of a projecting arm extending from the side walls of the elbow 11 and preferably integral therewith. By providing the elbow 11 with the three run ways, the elbow may be positioned at any desired angle throughout the position from 0 to 180° with respect to the horizontal or to more definitely state the same any angle throughout the third and fourth quadrants.

In attaching my improved valve to the radiator it is positioned as shown in Fig. 2 in which the axial line of the openings 5 and 6 will lie substantially vertically, this position being insured by having the offset end of the tube extending upward in a vertical direction. When the portions 7 and 8 of the tube are so positioned the line connecting the openings 5 and 6 will lie in substantially a vertical direction. With the tube so positioned the water level of the condensed steam as is illustrated by the dotted line in Fig. 2 will lie beneath the inner terminal of the opening 5 in the tube wall. In this manner suitable provision is made for the escapement of the air from the radiator and also the escapement of the water of condensation therefrom, the air and condensed steam will not in any way interfere during their escapement and thereby all snapping and pounding during the heating of the radiator will be prevented. As has been hereinbefore mentioned a desirable feature is providing for the turning through 180° of the elbow 11 so that the

connection to the return system may be made horizontal, for a short distance and then passed downward through the floor as is usual in the installation of heating systems. The check valve ball 15 allows water and air to escape therethrough and further provides for the retaining of any vacuum which may be present in the radiator by seating against the valve seat 9. Thus it will be understood that I have designed a valve adapted to take the place of the usual air outlet valve upon radiators it being understood that my device is to be used in connection with steam heating return systems. During the initial heating of the radiator, air will be forced out through the openings 5 and 6 and into the return pipe 16. As the steam enters the radiator it is condensed and deposited at the bottom of the radiator. The air and vapor will continue to flow through the openings 5 and 6 and principally through the opening 6 until such time as the water of condensation will be sufficient to effect a liquid seal of the opening 6. As has been hereinbefore mentioned the opening 5 is of limited size and serves the purpose of preventing the liquid seal from being forced up through the opening 6, the opening 5 equalizing the pressure above and below the said liquid seal.

Since the tube 18 is axially offset as shown at 7 in a direction parallel to the axis of the openings 5 and 6, it is possible to ascertain by a superficial inspection of the offset outer end of the tube, when the axis of the openings 5 and 6 (which openings are hidden within the radiator) is vertically disposed. The function of the opening 5 is to equalize the pressure on the seal both within the radiator and within the tube 18 and thus prevent the seal from flowing through the pipe 16 due to pressure within the radiator. The pipe 16 affords a comparatively free exit for the pressure within the tube 18 and at times, in the absence of the offset shown at 7, the pressure within the tube 18 will fall, due to the free exit through the pipe 16, and the seal will be blown out through the pipe 16 before the pressures inside of the tube and inside of the radiator can be equalized through the opening 5. The offsetting of the tube at 7 forms a shoulder which, as shown in Fig. 2, maintains the level of the seal comparatively close to the lower end of the opening 5. Consequently, immediately below the opening 5 and for a considerable distance in front of the opening 5 there is formed a relatively long, restricted throat defined by the upper surface of the seal and the inner surface of the tube 18 and the air and steam within the tube 18 do not expand and lessen the pressure within the tube 18, until the air and steam have passed forwardly to a point adjacent the ball valve 15.

Having thus disclosed the construction and operation of my improved valve what I claim to be new and original with me is:—

In a device of the class described, a radiator; a horizontal tube having a straight portion located within the radiator and provided with vertically alined upper and lower openings located within the radiator, said portion of the tube being closed at its inner end, and the upper opening being of small diameter compared with the lower opening, the outer end of the tube being axially offset in a direction parallel to the axis of the openings and constituting a means whereby the position of the axis of the openings with respect to the vertical may be determined by superficial inspection of the axial offset end, the offsetting of the outer end of the tube forming a seal retaining shoulder the upper edge of which lies in a plane passing close to the inner end of the upper opening; and an automatically acting valve located at the outer end of the tube.

In testimony that I claim the foregoing as my own, I have hereto affixed my signature in the presence of two witnesses.

WALTER H. DANIELS.

Witnesses:
T. F. JOHNSON,
E. GEORGE BUTLER.

Copies of this patent may be obtained for five cents each, by addressing the "Commissioner of Patents, Washington, D. C."