April 21, 1953 S. A. JACQUES 2,635,584

HYDRAULIC RELAY CONTROL

Filed Sept. 15, 1950 5 Sheets-Sheet 1

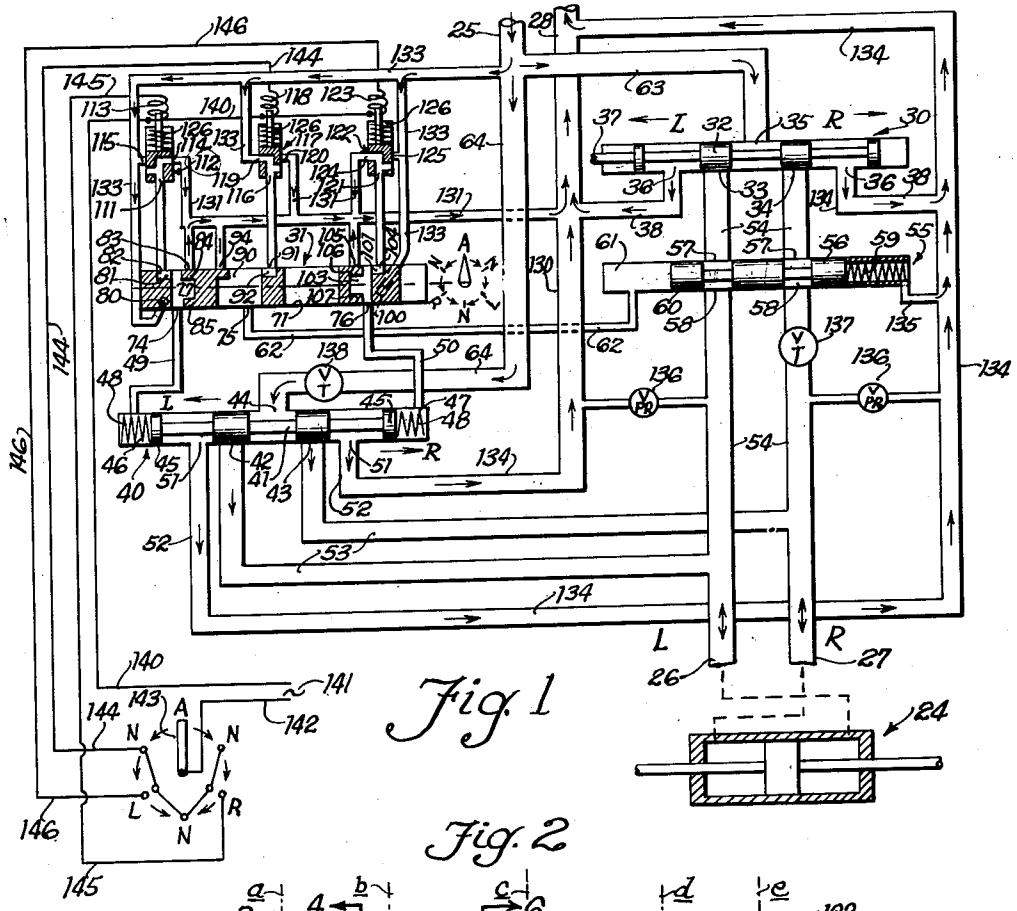

Fig. 1

Fig. 2

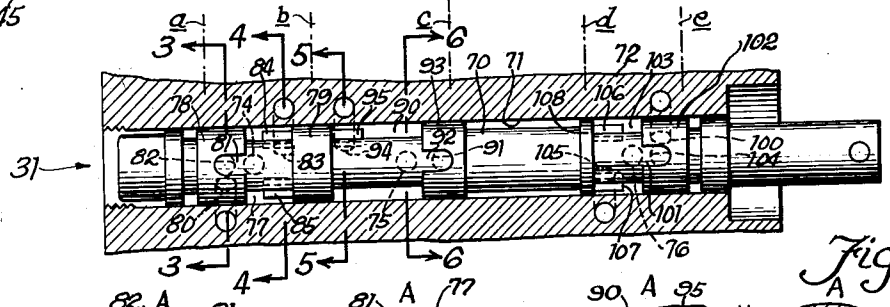

Fig. 6

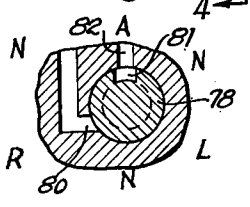

Fig. 3

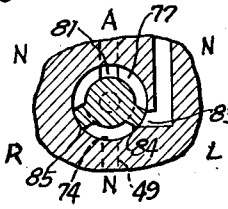

Fig. 4

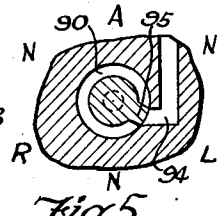

Fig. 5

INVENTOR.

Stanley A. Jacques

BY

Attys.

April 21, 1953 S. A. JACQUES 2,635,584

HYDRAULIC RELAY CONTROL

Filed Sept. 15, 1950 5 Sheets-Sheet 2

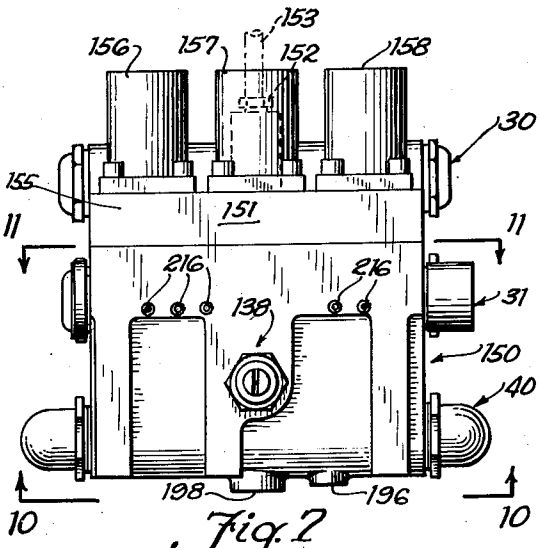

Fig. 7

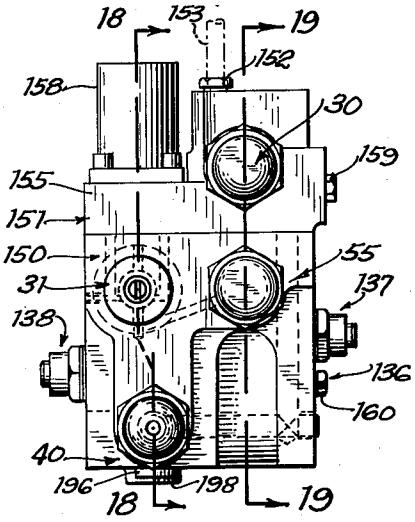

Fig. 8

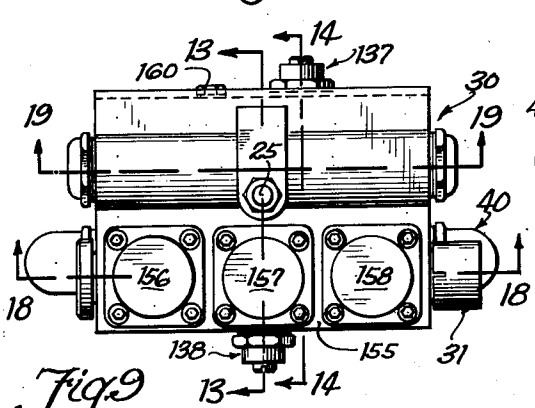

Fig. 9

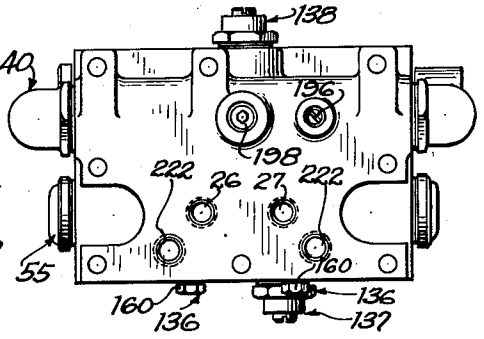

Fig. 10

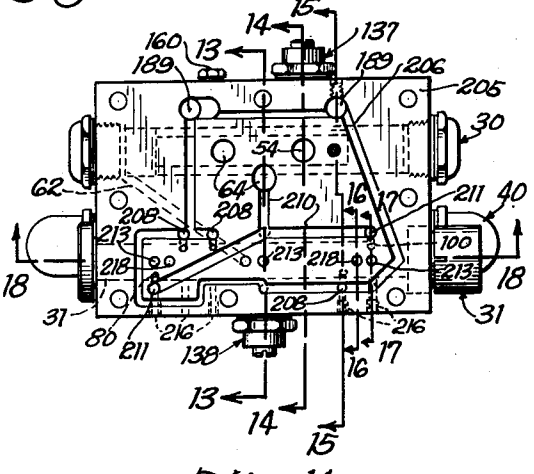

Fig. 11

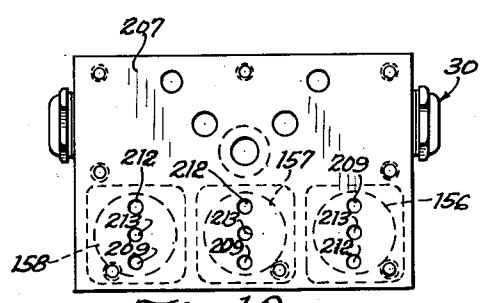

Fig. 12

INVENTOR.
Stanley A. Jacques
BY Jerry L. Foster
James B. Boyer
Attys

April 21, 1953 S. A. JACQUES 2,635,584

HYDRAULIC RELAY CONTROL

Filed Sept. 15, 1950 5 Sheets-Sheet 3

Fig. 13

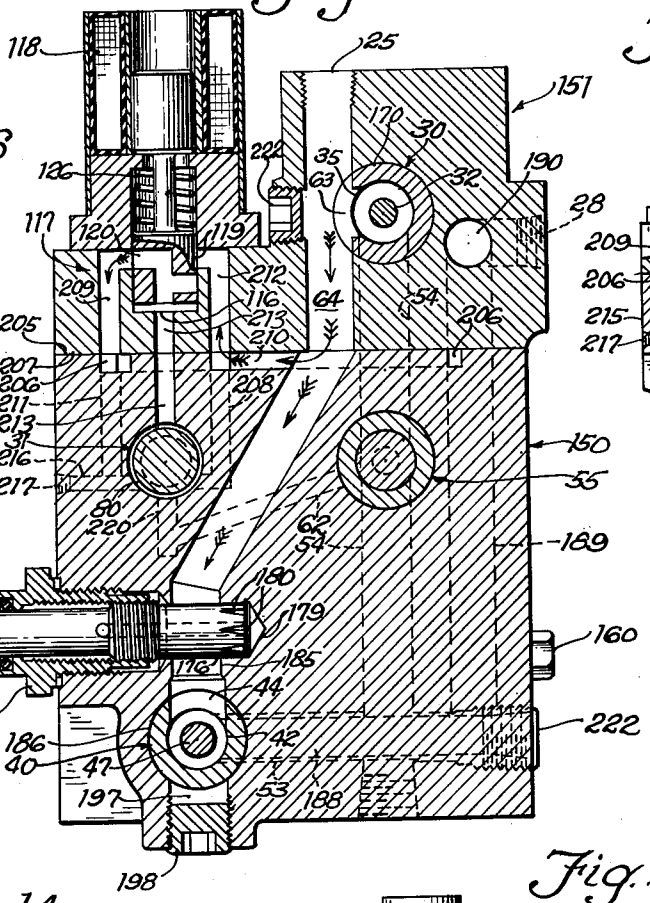

Fig. 16

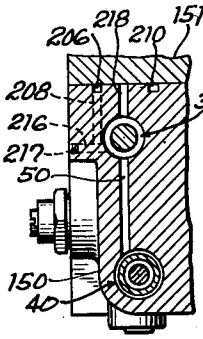

Fig. 17

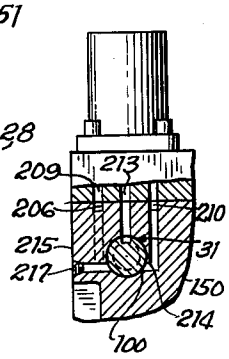

Fig. 14

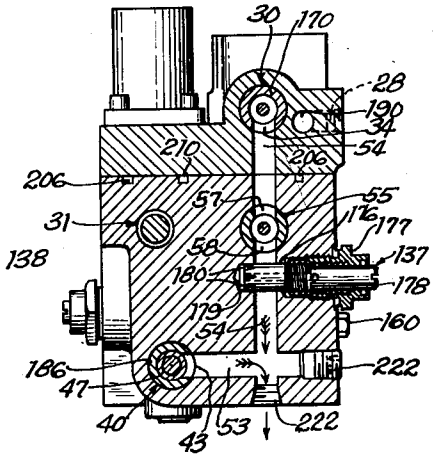

Fig. 15

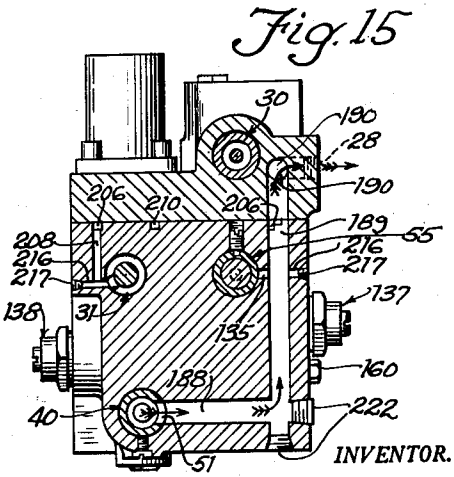

INVENTOR.

Stanley A. Jacques

BY Penny L. Foster

James B. Boyer

Attys

April 21, 1953 S. A. JACQUES 2,635,584

HYDRAULIC RELAY CONTROL

Filed Sept. 15, 1950 5 Sheets-Sheet 4

Fig. 18

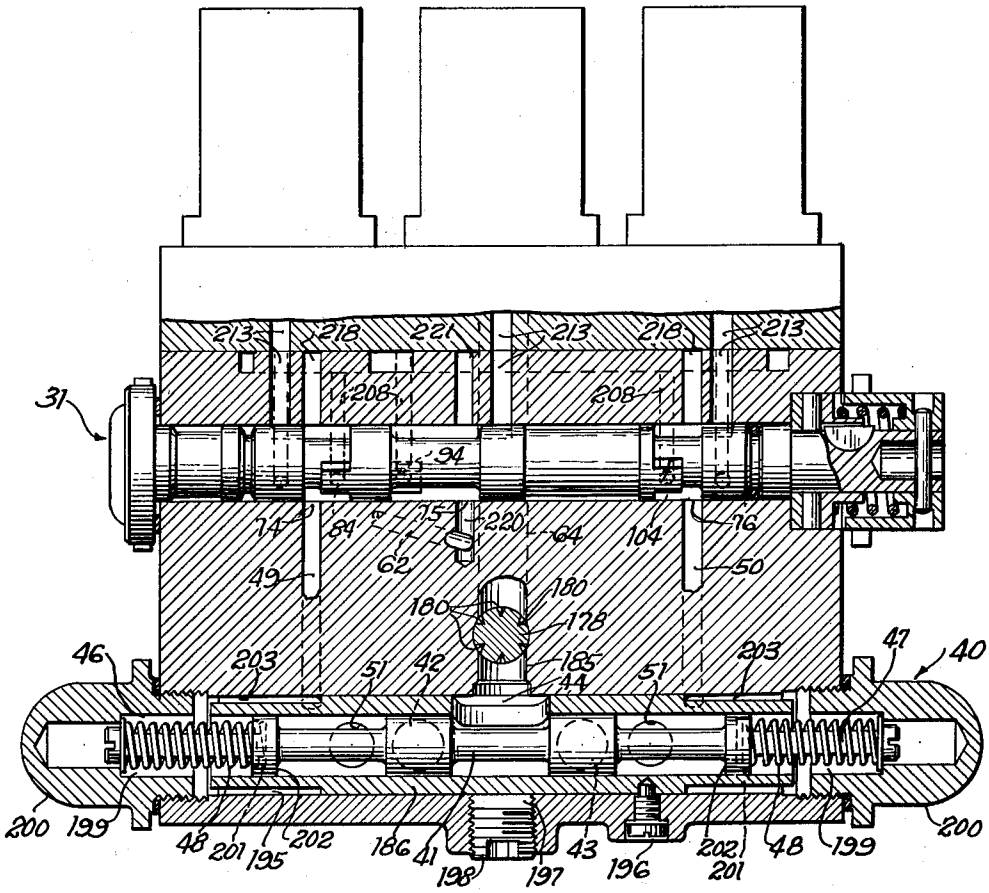

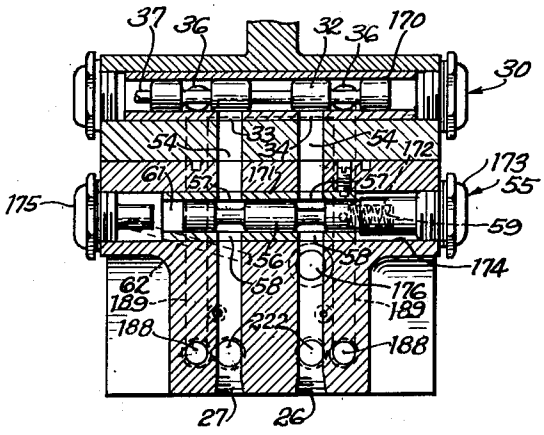

Fig. 19

INVENTOR.
Stanley A. Jacques
BY Perry & Custer
James B. Boyer
Attys

April 21, 1953 S. A. JACQUES 2,635,584

HYDRAULIC RELAY CONTROL

Filed Sept. 15, 1950 5 Sheets-Sheet 5

Fig. 20

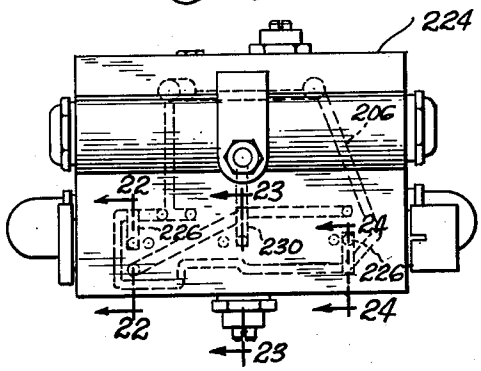

Fig. 21

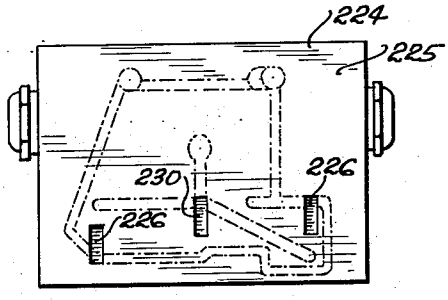

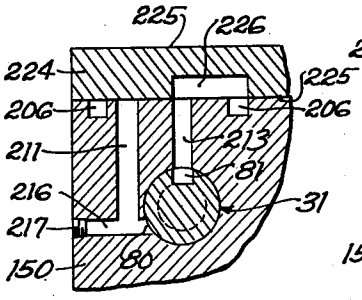

Fig. 22

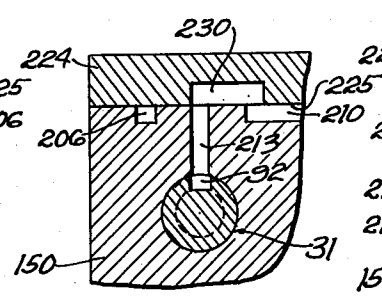

Fig. 23

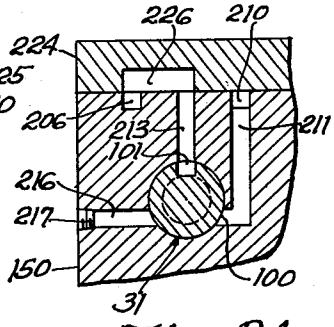

Fig. 24

INVENTOR.
Stanley A. Jacques
BY Penny L. Norton
James B. Boyer
Att'y

Patented Apr. 21, 1953

2,635,584

UNITED STATES PATENT OFFICE

2,635,584

HYDRAULIC RELAY CONTROL

Stanley A. Jacques, Chicago, Ill., assignor to Askania Regulator Company, Chicago, Ill., a corporation of Illinois

Application September 15, 1950, Serial No. 184,972

26 Claims. (Cl. 121—46.5)

1

The present invention relates to hydraulic systems for actuating a power unit and especially to a system arrangement that permits selection of the particular one of multiple actuating devices that is to accomplish operation of the power unit.

The present invention relates to control of a fluid operated power unit fluid supply system, of the type that is provided with two movable control members, movement of each of which controls flow of operating fluid to the power unit, and which are selectively placeable in exclusive control of such flow. In accordance with the invention, the system is so arranged that one of the control members, which conveniently may be termed the "secondary" one is in control of the system only while the other, conveniently termed the "primary" member is in a neutral position wherein it is itself ineffective to produce any operation of the power unit, but upon movement of the primary control member from a neutral position to an active position wherein it is effective to permit flow of fluid to operate the power unit, control of fluid flow by the secondary member is blocked.

The system of the invention is of a type providing two channels for controlled flow of fluid to the power unit, such channels being arranged for parallel connection between a source of fluid and the power unit input, a first channel being controlled by the primary control member, the second by the secondary control member and also by a cut off device that is actuated in relay fashion by the primary control member to block and unblock the second channel respectively as the primary control member is moved from and to a neutral position, wherein, as stated, it is ineffective to cause power unit operation. The two channels may comprise, and are hereinafter disclosed as comprising each a pair of fluid flow lines, the corresponding lines of the different channel pairs each having a common output connected with one of the two fluid inputs of a reversible power unit, and each channel having connected therein a two way valve that is oppositely operable respectively to connect the different lines of that channel in reversed senses respectively with a supply line and an exhaust line.

A second aspect of the invention relates to a unitary valve, actuator and control assembly containing all of the valves, actuators, and connections embodied in the control system, thereby eliminating the multiple valve units, actuator units and pipes, and the attendant great number of external fluid tight joints and connections necessary in a complex fluid control system made

2

up of separate unit assemblies, in accordance with common prior practice in fluid control system commercial practice.

As hereinafter used "control" is intended in its broader sense of effecting an operation or a lack of operation of the power unit, or effecting a flow-permitting or a flow-preventing condition of a fluid flow line, rather than in the more limited sense frequently assigned to it in hydraulic control practice, of selection of a particular valve of a variable, as a particular position of a movable member or a particular magnitude of flow rate of a variable flow. "Regulate" as used herein is intended to have the latter sense.

In the accompanying drawings:

Fig. 1 is a schematic diagram of a hydraulic control system embodying a form of the invention that provides for automatic relay control or manual operation of a hydraulic power unit, and that is arranged for either local manual operation or remote control operation by an electric system.

Fig. 2 is a horizontal sectional view of a valve assembly, showing in plan a manually actuable primary control or selector valve arranged in accordance with the invention to permit selection between manual operation of a hydraulic power unit by movement of the valve between positions wherein respectively it is effective to operate the power unit in opposite directions, and automatic relay operation under control by a second actuator device.

Fig. 3 is a transverse section on line 3—3 of Fig. 2.

Fig. 4 is a transverse section on line 4—4 of Fig. 2.

Fig. 5 is a transverse section on line 5—5 of Fig. 2.

Fig. 6 is a transverse section on line 6—6 of Fig. 2.

Fig. 7 is a front elevation of a hydraulic control system unit arranged to provide a system corresponding to that shown schematically in Fig. 1.

Fig. 8 is an end elevation of the unit, from the right as seen in Fig. 7.

Fig. 9 is a top plan of the unit.

Fig. 10 is a bottom plan of the unit.

Fig. 11 is a top plan of the bottom or main part of the unit.

Fig. 12 is a bottom plan of a top part of the unit arranged to provide remote control.

Fig. 13 is an enlarged sectional view on line 13—13 of Figs. 9 and 11.

Fig. 14 is a section on line 14—14 of Figs. 9 and 11.

Fig. 15 is a section on line 15—15 of Fig. 11.

Fig. 16 is a fragmentary section on line 16—16 of Fig. 11.

Fig. 17 is a fragmentary section on line 17—17 of Fig. 11.

Fig. 18 is an enlarged longitudinal section on line 18—18 of Fig. 8.

Fig. 19 is a section on line 19—19 of Fig. 8.

Fig. 20 is a top plan of an assembly not having provision for remote control.

Fig. 21 is a bottom plan of the upper section of Fig. 20.

Figs. 22 to 24 respectively are sections on lines 22—22, 23—23 and 24—24 of Fig. 20.

Describing the drawings in detail and first referring to Fig. 1, the disclosed hydraulic control system is arranged to operate a power unit, shown as a cylinder and piston assembly 24, through selective connection to a main power fluid input 25 of one of two output lines 26, 27, the other such line being connected to a main exhaust 28. For convenience of explanation, lines 26 and 27 are assigned directions, line 26, designated "L" being assumed to operate the power unit in a leftward direction when connected with the input 25, and line 27, designated "R" being assumed to operate the power unit in a rightward direction when connected with the input.

The system is disclosed as being arranged to provide for selection between relay control of connection of the output lines 26, 27 to the input 25 and exhaust 28 and manually effected selection of connection of such lines to the input and exhaust. The automatic relay control is effected by an automatic control valve 30, and manually controlled operation is effected by a manually operable valve 31. The latter valve 31 is a primary or master valve in the sense that its actuation to connect either line 26, 27 to input 25 and the other to exhaust 28 automatically disables pilot valve 30 from control of the output lines 26, 27.

The automatic relay valve 30 is shown as a four way spool valve of conventional arrangement, shown as including a spool body 32 that is axially movable from a neutral or cut off position to select which of two output ports 33, 34 is placed in communication with an input port 35 and which with an exhaust port 36. The valve body is shown as movable by an input signal rod 37 that may be actuated from any suitable signal source, for example a detector device arranged to measure the condition of a variable controlled by the power unit of the system.

The manual valve 31 is arranged to actuate a transfer valve 40 through hydraulic connections that will be described in detail. Transfer valve 40 is a four way valve of conventional arrangement, shown as comprising a spool body 41 that is axially movable from a cut off or neutral position wherein it is shown, to select which of two output ports 42, 43 is connected with an input port 44.

The body 41 of transfer valve 40 is provided at its opposite ends with expansible chamber actuating assemblies, shown as comprising piston members 45 that respectively are slidable in portions 46, 47 of the bore containing valve body 41, which portions respectively serve as cylinders for the different piston members 45. Loading springs 48 bias body 41 to its central cut off position preventing flow from input port 44 to either output port 42, 43. Selective connection of one or the other output port to the input port is accomplished by admittance of fluid under pressure to one or the other cylinder bores 46, 47 by way of passage lines 49, 50 that may be selectively connected with main input 25, and simultaneous connection of the other cylinder bore to main exhaust 28, by appropriate positioning of the manual valve 31. Exhaust ports 51 of the transfer valve, connected to exhaust 28 through lines 52, are so arranged as to connect either output port 42, 43 to exhaust when the other output port is connected with the input port 44. When pressures within the two cylinder bores 46, 47 are equalized by connection of both to exhaust or supply, transfer valve body 41 is returned to its cut off position by the loading springs 48.

The respective output ports 42, 43 of transfer valve 40 are connected with the main control system output lines 26, 27 by lines 53. The output ports 33, 34 of automatic relay valve 30 also are connected with the main output lines 26, 27, by lines 54, so that lines 26, 27 respectively comprise common outputs for corresponding ones of the paired lines 53 and 54. Lines 54, between the output ports 33, 34 of relay valve 30 are controlled by a cut off valve 55 that is actuated automatically in proper relation to operation of the transfer valve 40 to disable control of passage of fluid to and from the lines 26, 27 by relay valve 30 when manual valve 31 is positioned to move the transfer valve from its neutral position, and to re-establish such control by automatic valve 30 when manual valve 31 is positioned to restore transfer valve 40 to its neutral position.

Cut off valve 55 comprises a spool body 56 arranged to move axially between a position blocking off passage lines 54 from the automatic valve output ports 33, 34 to the output lines 26, 27, and a position wherein it is shown in the drawings, unblocking such passage lines. The two positions of cut off valve 55 respectively disable the automatic relay valve 30 from control of the system and condition the system for control by it. Proper coordination of actuation of the cut off valve 55 between its two positions with actuation of the transfer valve from and to its neutral position is accomplished by actuating both such valves by movement of the primary control or manual valve 31. Somewhat similar to the cylinder means and biasing springs that actuate the transfer valve 40, body 56 of the cut off valve 55 is biased to one of its positions, which may be either its passage-blocking or unblocking position but is shown as the latter, by means of a loading spring 59, and is provided with a piston 60 acting in a cylinder bore 61 to move the body against the force of spring 59 when fluid under pressure is admitted to cylinder bore 61. Such controlled admission of pressure fluid is accomplished by a passage 62 that is controlled by manual valve 31 for automatic connection to main input 25, or to main exhaust 28, respectively when the manual valve 31 is positioned to connect both cylinders 46, 47 of the transfer valve actuating assemblies to exhaust to return such valve to its neutral position, and when either of the transfer valve actuating cylinders to input 25 to move the transfer valve from its neutral position. As will be described later, the arrangement is such as also to provide a system-blocking condition wherein both cut off valve 55 and transfer valve 40 are maintained in their cut off conditions.

The input port 35 of the automatic relay valve 30 being connected with the main fluid input 25 by a supply line 63, and the input port 44 of transfer valve 40 being connected to the main input 25 by a supply line 64, it will be seen that

two parallel fluid flow channels are provided between main input 25 and the main output lines 26, 27, the first comprising passage 63, transfer valve 40 and lines 53, the second comprising supply passage 64, relay valve 30, cut off valve 55 and lines 54. Provision is made for automatic relay control of the second channel by valve 30, manually actuated control of the first channel by valves 31 and 40, and blocking and unblocking of the automatically controlled second channel in properly coordinated relation with such manual control, by valves 31 and 55. This system arrangement type comprises one aspect of the invention. It will be evident that the type of arrangement is not limited to the disclosed specific types of actuation of valves that control the two channels. Automatic and manual actuation, however, present a typical and usually desirable alternate control arrangement.

A second aspect of the invention resides in a particular arrangement for effectively accomplishing the properly coordinated actuation of the valves that respectively control the two flow channels in such a system arrangement. Referring to Figs. 2 to 6 in conjunction with Fig. 1, a preferred arrangement of the manual or primary selector valve 31 is disclosed, such arrangement not only being adapted for accomplishing the desired type of system operation described above, but additionally being especially arranged for cooperation with a very simple and effective remote control system. Additionally the valve arrangement is such that a remote control system may be used or not without any modification of the valve arrangement itself.

The operating part of valve assembly 31 comprises a compound valve body 70 that is rotatable in a valve bore 71 in a casing structure 72, the latter being provided with controlled ports, and with supply and exhaust ports that are connectible with the controlled ports by suitable rotative positioning of the valve body 70, to produce the correlated actuation of transfer and cut off valves 40, 55 that give the system its intended operating characteristics. In Fig. 1 certain ports and cooperative valve body elements are shown schematically, Figs. 2 to 6 showing a preferred actual physical arrangement.

The valve assembly 31 comprises three sections, from left to right as seen in Figs. 1 and 2, a section between dotted lines *a* and *b* of Fig. 2 that is effective to connect with either supply or exhaust a controlled port 74 of line 49 to transfer valve actuating cylinder 46; a section between dotted lines *b* and *c* that is effective to connect with either supply or exhaust a controlled port 75 of line 62 to the cut off valve actuating cylinder 61; and a section between lines *d* and *e* that is effective to connect with either supply or exhaust a controlled port 76 of line 50 to the second actuating cylinder 47 of transfer valve 40. The left end section, between lines *a* and *b*, comprises a chamber or recess 77 in valve body 70, lying between two plug parts 78, 79 of such body, and into which controlled port 74 opens in all rotative positions of the valve body. A pressure fluid supply port 80 enters valve bore 71 in the region of plug part 78, for registration upon proper rotative positioning of valve body 70 with a channel 81 in such plug part and the end of which opens into chamber 77. A port 82, at present to be considered as an exhaust port, is also arranged for registration with channel 81 in a different valve body position, entering valve bore 71 in angular spacing from supply port 80.

An exhaust port 83 also opens into valve bore 71 in an axial position for control of its communication with chamber 77 by a pair of angularly spaced valve lugs 84, 85 projecting axially into chamber 77 from the second plug part 79. The arrangement of ports 74, 80 and 82, channel 81, and lugs 84, 85 is shown by Figs. 2, 3 and 4. The system, as stated, being shown in condition for automatic relay control by valve 30, as indicated by the "A" position of the valve body 70, supply port 80 is out of register with channel 81 and consequently controlled port 74 is cut off from supply, while registration of channel 81 with exhaust port 82 connects controlled port 74 to exhaust. Consequently, no fluid under pressure is being admitted to transfer valve actuating cylinder 46 and the latter is exhausted. Upon rotation of the valve body 70 to its "L" position, 120 degrees clockwise as seen in Fig. 3 and on the indicating dial of Fig. 1, channel 81 will be out of registration with both supply port 80 and exhaust port 82, but exhaust port 83 will be unblocked by both lugs 84, 85, so actuating cylinder 46 again will be exhausted. Upon rotation of valve body 70 to its "R" position, 120 degrees counterclockwise as seen in the noted figures channel 81 will be registered with supply port 80, placing actuating cylinder 46 in communication with port 80 through port 74, chamber 77 and channel 81, while exhaust port 82 will be blocked by being out of register with the channel, and exhaust port 83 will be blocked by lug 85 as suggested by Fig. 4. Between the "A" or automatic control position and each of the "R" and "L" positions, as well as between the latter are "N" positions, wherein both flow channels to output lines 26, 27 are blocked. In each such position exhaust port 83 is unblocked by both lugs 84, 85 and chamber 77 and consequently controlled port 74 and actuating cylinder 46 are connected to exhaust.

The arrangement of the center valve section, between lines *b* and *c* of Fig. 2, is such as to provide a chamber or recess 90 in valve body 70, into which controlled port 75, of line 62 to the cut off valve actuating cylinder 61, is continually open. A port 91, at present to be considered as a supply port, enters valve bore 71 at a location for registration with a channel 92 in a plug part 93, and the end of which opens into chamber 90. Such registration is accomplished only when the valve body is in the single "A" position for establishing automatic relay control of the system by valve 30. An exhaust port 94 also opens into valve bore 71 and is controlled by a single valve lug 95 that projects axially from plug part 79 in angular arrangement to block exhaust port 94 from communication with chamber 90 only when the valve body is in the single "A" or "Automatic" position.

This arrangement of the center, or cut off valve-controlling section of valve 31 is such as to connect the cut off valve-actuating cylinder to supply port 91, and consequently maintain cut off valve 55 in its channel unblocking condition only when the manual valve 31 is in its "A" position. In all other positions, whether "R," "L" or "N," the actuating cylinder 61 is connected to exhaust through chamber 90 and port 94, while supply port 91 is blocked from chamber 90 by being out of registration with channel 92.

The third section of valve 31, lying between lines *d* and *e* of Fig. 1, is similar to the first section, except that the supply and exhaust ports are reversed to connect transfer valve actuating

cylinder 47 to supply and exhaust in reversed relation to such connection of actuating cylinder 46. This third section comprises a supply port 100 that enters valve bore 71 in an axial position for registration with channel 101 in a plug part 102 and the end of which opens into a chamber or recess 103 in valve body 70. Controlled port 76 of passage line 50 to the second transfer valve-actuating cylinder 47 continually opens into chamber 103. Supply port 100 enters valve bore 71 in such angular spacing from supply port 80 of the first section, and with respect to the angular positions of channels 81 and 101 in the "R" and "L" positions of the valve body 70, that such ports 80 and 100 are in registration with channels 81 and 101 only when the valve body is respectively "R" and "L" positions. A port 104, at present to be considered as an exhaust port, enters valve bore 71 for registration with channel 101 only when the valve body is in its "automatic" position. An exhaust port 105 enters valve bore 71 in such angular position relative to two valve lugs 106, 107 that extend from a plug part 108 as to be blocked from communication with chamber 103 in the "automatic" and "L" positions of valve body 70.

The arrangement of the last described valve section is such that in the "R" position, channel 101 is out of register with supply port 100, and exhaust port 105 is in communication with chamber 103, and therefore with controlled port 76 and transfer valve-actuating cylinder 47, so that the latter is exhausted. In the "L" position, channel 101 registers with supply port 100, to admit pressure fluid from port 100 to cylinder 47 through chamber 103, controlled port 76 and passage 50, in this condition exhaust port 104, being blocked from communication with chamber 103 by being out of register with channel 101, and exhaust port 105 being blocked from chamber 103 by lug 106. In the illustrated "automatic" or "A" position, port 104 is registered with channel 101 to connect chamber 103 and cylinder 47 to exhaust. In each of the "N" positions channel 101 is out of register with supply port 100, and exhaust port 105 is in communication with chamber 103 to exhaust cylinder 47.

It will be seen from the foregoing description of the valve assembly 31, that in "automatic" position of valve body 70 pressure fluid will be admitted to cut off valve actuating cylinder 61 to maintain cut off valve 55 in its unblocking position, but that in all other valve body positions cylinder 61 will be connected to exhaust to permit loading spring 59 to move cut off valve 55 to its blocking position. Cylinders 46, 47 that actuate transfer valve 40 respectively will be connected to supply and exhaust in the "R" position of the valve body, and to exhaust and supply in the "L" position, while both will be so connected as to balance pressures in the cylinders 46, 47 in both "automatic" and all "N" positions of valve body 70, in the specific arrangement shown such balancing being accomplished by connecting both the cylinder bores to exhaust.

The system disclosed by Figs. 1 to 6 is arranged for remote control by an electric system, and it is for this reason that the ports 82, 104 of the two end sections of valve 31, considered above as exhaust ports, and port 91 of the center section, considered above as a supply port are arranged in the manner shown. Actually each of these ports 82, 92 and 104 acts, for remote control purposes, selectively as either a supply or an exhaust port, depending on energization or de-energization of a solenoid that actuates a valve to selectively connect such port with exhaust and supply lines. It is to be noted that due to the arrangement of these remote control ports for registration with the channels 81, 92, and 101 only when the valve body 70 is in "automatic" position, remote control by connecting them selectively with supply and exhaust lines can be accomplished only when the valve body is in the "automatic" position. This particular arrangement is not necessarily exclusive, but is regarded as the most useful since it permits taking over of operation of the system from a remote, master station when the valve 31 is in its "automatic" position and for some reason, possibly in an emergency, it is desirable to quickly interrupt the automatic relay operation of the system and establish system actuation under manual control by an operator from such master station.

Port 82 of the first transfer valve-actuating section of valve 31 communicates with the common port 111 of a two way valve 112 that is actuable by a solenoid 113 to selectively connect port 111 with an exhaust port 114, when the solenoid is de-energized as it is shown, and with a supply port 115 when the solenoid is energized.

Port 91 of the cut off valve-controlling section of valve 31 is connected with the common port 116 of a two way valve 117, actuable by a solenoid 118 and arranged to connect port 116 with a supply port 119 when the solenoid is de-energized, as it is shown, and to connect it with an exhaust port 120 when the solenoid is energized.

Port 104 of the second transfer-actuating section of valve 31 is connected with the common port 121 of a two way valve 122, actuable by a solenoid 123 and arranged to connect port 121 with an exhaust port 124 when the solenoid is de-energized, as it is shown, and to connect it with a supply port 125 when the solenoid is energized.

Each of the two way valves is biased to the position shown by such means as a return spring 126, and these positions of the two way valves place the system under control of the manual valve 31. However, when the latter is in its "automatic" position, energization of the center solenoid 118 is effected to connect the cut off valve actuating cylinder to exhaust instead of supply, by changing port 91 from a supply port to an exhaust port, through actuation of the two way valve 117 to connect port 91 to the exhaust port 120 rather than to supply port 119. When the left hand solenoid 113 is energized, transfer valve-actuating cylinder 46 is connected to supply by changing port 82 from an exhaust port to a supply port, through actuation of two way valve 112 to connect port 82 to supply port 115 instead of exhaust port 114. Similarly, when the right hand solenoid 126 is energized, transfer valve-actuating cylinder 47 is connected with supply by changing port 104 from an exhaust port to a supply port, through actuation of two way valve 122 to connect port 104 to supply port 125 instead of to exhaust port 124.

The various exhaust ports of the system, 83, 94 and 105 of the manual valve assembly 31, and 114, 120 and 124 of the two way valves 112, 117 and 122, may be connected to main exhaust 28 by an exhaust system that includes a main manifold line 130 and branch lines 131. The supply ports of the system, 80 and 100 of manual valve assembly 31, and 115, 119 and 125 of the two way valves may be connected to main input 25 by a supply system including branch lines 133

connected to the line 64 that supplies the transfer valve input port 44. The main header supply line 64 may also supply input port 35 of the automatic relay control valve 30. The lines 52 of the exhaust system may connect exhaust ports 51 of the transfer valve 40, and lines 38 of such system may connect exhaust ports 36 of the automatic control valve 30, to the exhaust manifold line 130 by branch lines 134. Advantageously the bore enclosing the return spring 59 of the cut off valve 55 is connected with the exhaust system through an exhaust line, shown as 134, by a line 135 for bleeding off any fluid that seeps past the valve body into such bore. Pressure relief or safety valves 136 may be used, preferably connected at some point between the output sides of the cut off and transfer valves 55, 40, to prevent development of excessive pressures in output lines 26, 27 when both of the latter valves are in cut off conditions, as by heating of the fluid in such lines by an external source. A throttle valve 137 may be interposed in one of the lines 54 for selecting maximum flow rate under relay control by automatic valve 30, and a throttle valve 138 may be interposed in supply line 64 to the transfer valve 40 for selecting maximum flow rate when the system is operated by manual valve 31 and transfer valve 40.

For remote control operation, an electric system is provided for selectively energizing solenoids 113, 118, 123. For proper remote operation, since the center solenoid is effective to move cut off valve 55 to its blocking position and solenoids 113 and 123 respectively are effective to establish operating conditions corresponding to "R" and "L" positions of manual valve 31, it is evident that provision should be made for energizing solenoids 113, 123 in selective paired relation with solenoid 118, while provision should be made for energizing the latter alone to establish a fully blocked condition of the system corresponding to that produced by valve 31 in its "N" positions. The solenoid-energizing system is shown as arranged to accomplish these relations of solenoid energization, the specific system disclosed being purely exemplary.

A common electrically conductive line 140 connects one terminal of each solenoid coil to one side of a current source 141, while the other side of such source is connected by line 142 to the common, movable contactor of a multi-position switch, preferably having six positions that correspond to the six positions of manual valve 31, and which in Fig. 1 are similarly designated. Contactor 143 connects to source line 142 only a line 144 that is connected with the second terminal of the center, or cut off valve-actuating solenoid 118, when the contactor is in one of its "N" positions, thereby connecting cut off valve-actuating cylinder 61 to exhaust through the two way valve 117, while both transfer valve-actuating cylinders 46, 47 continue connected to exhaust, since solenoids 113, 125 continue de-energized. In the "R" position, contactor 143 connects to source line 142 a line 145, which connects with the second end of the coil of solenoid 113, and also connects the center solenoid line 144 with the source line for blocking the automatic channel simultaneously with shift of transfer valve 40 to its "R" position. Similarly, when contactor 143 is moved to "L" position it connects both the cut off valve-actuating solenoid line 144 and a line 146 connected with the second side of the coil of solenoid 123 to simultaneously energize solenoids 118 and 123. In "A" position none of lines 144, 145, 146 is connected to current source line 142, and all solenoids are de-energized.

A third aspect of the invention relates to arrangement of a hydraulic control system of complex nature, typified by the system above described, in a unitary structural arrangement, thereby avoiding all of the disadvantages and inconveniences that arise from using, as the valves necessary to such a system, independent units interconnected by individual pipe lines extended between the multiple fittings that many such valves must have, such for example as valve 31 of Figs. 1 to 6, or transfer valve 40 of Fig. 1.

First referring to the external views of such an assembly, Figs. 7 to 10, the unit therein disclosed is arranged in conformity with the system of Fig. 1 and contains all elements of the system disclosed by such figure, with only four pipe connections and fittings, which are for the main input 25, the main exhaust 28, and the output lines 26, 27. All of these valves, and the exhaust and supply systems necessary to operate them in the described manner, as well as the lines providing the main flow channels of the hydraulic system, are formed as bores in a primarily solid block-like body, preferably for reasons which will be disclosed, comprising a lower main section 150 and a removable top section 151. These sections preferably may be formed from solid block blanks, valve bores and passages being drilled into them as will be described.

The main input 25 comprises a port opening of a bore in top section 151, forming line 64 and provided with a suitable fitting for connection of a delivery pipe line, in Fig. 7 designated 153. The output lines 26, 27 of Fig. 1 may be connected to ports in the bottom surface of the body member 150, shown in Fig. 10, and designated 26, 27 to correspond to Fig. 1. The automatic relay valve assembly 30 is arranged in top section 151, while the manual valve assembly 31, transfer valve 40, and cut off valve 55 are all arranged in the lower section 150. The assemblies of solenoids and two way valves for remote control are seated on the top surface of a flat part 155 of the top section, such part extending forward from a part 156 that houses the automatic relay valve 30. The solenoid and valve assemblies of Fig. 1, 112, 113; 117, 118; and 122, 123 respectively are designated 156, 157 and 158 in Figs. 7, 8, 9 and 12. The main exhaust 28 of Fig. 1 comprises a port, opening through the rear surface of upper section 151, and provided with a coupling fitting 159, seen in Fig. 8. Throttle valves 137, 138 of Fig. 1 have operators projecting respectively from the rear and front surfaces of the lower section 150, which houses both such valves. The pressure relief valves 136 are secured in bores extending from the rear surface of the lower section 150, by plugs 160.

Referring now to the internal arrangement of the unit, shown in sections, Figs. 13 to 19, the main supply lines, from which fluid is supplied under pressure to the power unit controlled or operated by the system, are best shown in Figs. 13, 14 and 19. First describing the channel controlled in relay fashion by automatic valve 30, which channel is vertical from top to bottom of the unit and disposed toward the rear thereof, the input line 63 connects the automatic valve input port 35 to the main fluid input 25 through an upper reach of supply line 64. As shown in Fig. 13, input port 35 is in the forward side of a liner 170 wherein the automatic valve body 32 is axially slidable. The automatic valve output

ports 33, 34 are at the bottom of the valve assembly and connect with vertical bores that form the upper reaches of lines 54, which numeral designates the bores in question in Figs. 11, 13, 14 and 19.

Bores 54 include registering portions in the upper and lower body sections, as seen in Figs. 14 and 19, and they connect with both the input ports 57 and output ports 58 of the cut off valve assembly 55. The latter is shown as arranged in a liner 171 wherein valve body 56 is slidable and which also forms the actuating cylinder 61 for the cut off valve, as seen best in Fig. 19. The loading spring 59 is shown, best in Fig. 19, as being supported in a bore 172 in a valve cap 173 that closes one end of the bore 174 wherein the cut off valve assembly is enclosed. At the opposite end valve bore 174 is closed by a cap 175. The bores 54 continue downward from the cut off valve output ports 58 to the main output line ports 26, 27.

The throttle valve assembly 137 for the automatic control channel is best shown in Fig. 14. Such assembly is mounted in a bore 176 that extends from the rear surface of bottom body section 150 and that intersects one bore 54 and extends past it. A body 177 is threaded into bore 176, such body having an internal threaded bore wherein is threaded valve plunger body 178 for axial adjustment by rotation. The end portion of plunger body 178 is of a size to completely block passage bore 54 when it enters the portion 179 of bore 176 beyond such passage bore. At its end plunger body 178 is provided with a peripherally spaced series of tapered ports 180 that provide communication between the sections of bore 54 above and below the throttle valve assembly. The effective cross sectional area of this communication is determined by the axial position of plunger body 178, which selects the cross sections of ports 180 where such ports cross the margin of bore 54. A very fine adjustment of flow rate for service at relatively low flow rates is possible by this throttle valve arrangement. If large flow rates are desired for the particular installation, or for a particular period of service, the plunger body 178 is simply backed off to clear passage bore 154 to any desired extent.

The supply line to transfer valve 40, passage 64, comprises a vertical reach in the upper body section 151, and a reach in the bottom section 150 that registers with the first reach and from the location of such registration is inclined forward and downward to a lower vertical reach 185 leading to transfer valve input port 44 which is arranged at the top of the assembly 40. Flow rate through the transfer valve-controlled channel may be selected by arrangement of throttle valve 138 to control the cross sectional area of the vertical reach 185, as shown in Fig. 13. Throttle valve assembly 138 is a duplicate of assembly 137 described above, and the same reference numerals are applied to it in Fig. 13.

The body 47 of transfer valve 40 is arranged in a liner 186 through the top of which opens input port 44. Output passage bores corresponding to lines 53 of Fig. 1, and indicated by the same numerals in Figs. 13, 14 and 19, lead from the transfer valve output ports 42, 43 to connection with the vertical passage bores 54, as best seen in Figs. 14 and 19.

The exhaust system of the transfer valve-controlled channel comprises a pair of horizontal passages 188 that connect the transfer valve exhaust ports 51 with vertical exhaust passage bores 189, located rearward of the bores 54, and that in turn open into a horizontal header bore 190 in the upper body section 151, shown in Figs. 13, 14 and 15, such bore being located in the rear of automatic valve 30 and into which open the exhaust ports 36 of the automatic valve assembly 30. At one end the header bore 190 opens into main exhaust 28. The exhaust passage bores 188, 189, 190 correspond to the exhaust lines 134 of Fig. 1.

Referring to Fig. 18, it will be seen that liner 186 is secured in the transfer valve bore 195 by a set screw 196. An access bore 197 that is formed during boring of the vertical reach 185 of the supply to the transfer valve is closed by a plug 198. Transfer valve loading springs 48 are seated in bores 199 of valve caps 200, and in seats 201 in piston portions 202 of valve body 41. These piston portions 202 operate in cylinders formed by the ends of liner 186 and that correspond to cylinders 46, 47 of Fig. 1. The liner 186 has end portions of reduced diameter providing passage-forming clearances 203 for conducting fluid between bores 49, 50, leading from the controlled ports 74, 76 of the manual valve assembly 31, and the cylinder portions provided within the liner.

The details of the manual valve assembly 31 already have been described, and in Figs. 13 to 24 the same numerals are used. The physical arrangement, in the blocks that form the body sections 150, 151, of the ports, passages and bores that form the actuating system for the transfer and cut off valves 40, 55 will now be described.

In the top of the bottom body section 150, and opening through the top surface 205 thereof as best seen in Fig. 11, is formed a groove 206 that communicates with the two vertical exhaust passage bores 189, and that preferably extends in a complete loop, as shown, surrounding all of the supply passages and channels opening through surface 205, thereby to form a trap for any fluid that may escape from the supply between surface 205 and the matching bottom surface 207 of the upper section 151. Channel 206 also serves as an exhaust passage connecting the various exhaust ports of the manual valve 31, and those of the two way valves if remote control provision is made, to the exhaust bores 189. To this end the exhaust ports 83, 94 and 104 of the respective manual valve sections are connected with groove 206 by vertical bores 208 that open through the bottom of such groove. The exhaust ports 114, 120, 124 of the respective two way valves 112, 117, 122 are connected to channel 206, when top section 151 is mounted on bottom section 150, by bores 209 in the body of top section 151, which bores are so located as to register with channel 206 when the top section is mounted, as suggested by Figs. 13 and 17.

Also opening through the top surface 205 of the lower body section 150 is a supply channel 210 that communicates with the main input 25 by way of the supply passage bore 64 when the two body sections are assembled. As best shown by Fig. 11 this channel 210 is generally Y-shaped in plan, and through its bottom open vertical bores 211 that communicate respectively with supply ports 80, 100 of the respective transfer valve-actuating sections of manual valve assembly 31. The supply ports 115, 119, 125 of the solenoid-actuated two way valve assemblies are connected with supply channel 210, when the sections 150, 151 are assembled, by vertical bores 212 in upper section 151 that open through the

bottom surface 207 of such section in arrangement for registration with channel 210 when mounted on the lower section. The remote control-providing ports 82, 91, 104 of the respective sections of the manual valve assembly 31 are connected with the common ports 111, 116, 121 of the solenoid-actuated two way valve assemblies by vertical bores 213 in the top and bottom body sections, such bores being located to register when the body sections are assembled.

It will be noted from the sectional figures disclosing the internal arrangement of lower body section 150, Figs. 13 to 19, that certain of the bores forming ports opening into manual valve bore 71 are horizontal, that some enter the bore 71 from the rear side of such bore, and further, that passages 49 and 50 and the passage forming the cut off valve actuating controlled port 75 extend downward from the under side of valve bore 71. The horizontal bores, such as that designated 214 in Fig. 17, which forms supply port 100 of the right hand manual valve section, may be formed by drilling from the front surface 215 of the lower body section 150, and closing the access bores that are thus formed in making the passages extending from the rear of valve bore 71 with plugs 217. Similarly, the bores that form passages extended forwardly of valve bore 71 are closed by plugs 217. Somewhat similarly, the passages that extend downward from the bottom of bore 71 can be formed by drilling from the top surface 205 of body section 150, the resulting access bores 218 being blocked by the bottom surface 207 of upper section 151 when mounted on section 150, as shown in Fig. 16. In Fig. 18 the vertical bore forming controlled port 75 is designated 220, and in Figs. 18 and 11 the access bore formed in drilling it is designated 221. The passage 62 connecting the port-forming bore 220 with the cut off valve actuating cylinder 61 may be drilled through the body section 150 from the cut off valve bore. The exhaust passage bores 188, 189, the bores forming lines 53 and 54, and passage 63 to the input port of the automatic valve 30 all may be drilled from outer surfaces of the body members and the access bores formed by such drilling closed by plugs 222. The bleed passage 135 for the cut off valve spring bore may be formed similarly.

For use of the system of valves 30, 31, 40 and 55 without electrical remote control, the lower body section 150 can be used without any modification, a modified top section without the two way valve and solenoid assemblies being provided. Such a modified top unit is designated 224 in Figs. 20 to 24. Since, when no remote control operation is provided the ports 82 and 104 of the two transfer valve-actuating sections of manual valve 31 must be exhaust ports for connecting the actuating cylinders 46, 47 to exhaust in certain positions of valve body 70, and port 91 of the cut off valve section of the manual valve must act as a supply port, the modified top section 224 is provided with passages arranged to connect ports 82 and 104 to exhaust and port 91 to supply. As shown by Figs. 20 to 24, ports 82 and 104 are connected to exhaust channel 206, when the modified top section is mounted on body section 150, by channels 226 cut into the bottom of the top section and opening through its lower surface. These channels 226 are located so that their opposite ends register with the vertical bores 213 that connect with ports 82, 104 and with exhaust channel 206. A channel 230 similarly cut in the bottom of the modified top section 224 is located to connect with the bore 213 that is connected to manual valve port 91 and with the supply channel 210.

As stated, the automatic or relay control valve 30 is arranged in the top section while the cut off valve 55, the manual or primary selector valve assembly 31 and the transfer valve 40 all are arranged in the lower section 150. Furthermore, the two parallel flow channels that respectively are controlled by the valve 30 and the valve 40 are connected in the top section to the upper part of passage 64, which forms a common supply input passage for the parallel flow channels. It will be noted that by this type of arrangement of the two body sections, in addition to making provision for ready manufacture by making use of the matching surfaces of the two sections that are in face to face contact in the assembly for enclosing passages formed as grooves in one or both sections, and by drilling from the surface of the lower section to make certain of the rather complex system of communication bores by means of which valve actuation is accomplished, also the arrangement of the valve 30 in the top section permits selection of any particular form of valve that may be required for a particular installation without necessity of making a specialized construction or arrangement of the entire unit. The lower section 150 contains all of the elements necessary to the interlocking of blocking and unblocking valves arranged in parallel flow channels, and thus may be made as a standard unit with which various types of top sections, selected in accordance with the requirements of a particular installation, may be used.

It will be readily appreciated from the foregoing disclosure that many variations may be made of the arrangements specifically disclosed, and consequently it will be understood that such arrangements are purely exemplary and that the scope of the patent is to be determined solely by the appended claims.

I claim:

1. A hydraulic system for actuating a power unit, comprising means providing a pair of separate flow channels for parallel connection between a source of fluid under pressure and a power unit to be operated and at least one of which channels comprises a pair of flow passages, a supply passageway system for connection to such a fluid source and an exhaust passageway system, said systems including lines for supply to and exhaust from said channels of fluid from such a source, a transfer valve arranged for movement in opposite directions from a neutral position blocking both passages of said one channel for selectively and reversely connecting such channel passages to said supply and exhaust system lines, biasing means urging said transfer valve to its neutral position and a pair of expansible chamber assemblies each arranged to move said transfer valve in one of its directions of movement when such assembly is connected to said supply system and to permit movement of said valve in the opposite direction when such assembly is connected to the exhaust system, a cut off valve movable between positions respectively blocking and unblocking the other said channel and a hydraulic actuator arranged to move said cut off valve between such positions upon change of connection of said actuator from one said system to the other, and a primary selector valve arranged to selectively connect either said expansible chamber assem-

bly to the supply system and simultaneously connect the other to the exhaust system, for moving said transfer valve in a selected direction from its neutral position, or to connect both said assemblies to the same one of said systems to permit return of said transfer valve to its neutral position by said biasing means, said primary selector valve also being arranged to reverse the connection to said systems of said cut off valve actuator in correlation with its connection of said expansible chamber assemblies for moving said cut off valve to its channel-blocking position simultaneously with connection of the two said assemblies to the different systems and to move said cut off valve to its channel-unblocking position only when both said assemblies are connected to the same one of said systems.

2. A hydraulic system in accordance with claim 1, wherein for simultaneous blocking of both said channels said primary selector valve is arranged also for connecting both said expansible chamber assemblies to the same one of said supply and exhaust systems and to connect said cut off valve actuator for movement of the cut off valve to its channel-blocking position upon connection of said assemblies to the two different said systems.

3. A hydraulic system in accordance with claim 1, wherein said primary selector valve comprises a stationary casing element having therein a valve bore, three controlled ports entering said bore and connected respectively with said expansible chamber assemblies and said cut off valve actuator; and supply and exhaust ports respectively connected with said supply and exhaust systems and entering said valve bore, and a valve body movable in said valve bore and having a formation for selectively establishing, by movement of said body to different positions, communication between said controlled ports and said supply and exhaust ports for connection of said expansible chamber assemblies and said actuator to the supply and exhaust systems in the recited relations.

4. A hydraulic system in accordance with claim 1, including a unitary, primarily solid body structure provided with bores wherein are arranged respectively all of said valves, assemblies and actuator, said body also having passage bores providing said supply and exhaust systems, lines and flow channels, and communication bores providing hydraulic actuating connections between said expansible chamber assemblies and primary selector valve and between said actuator and primary selector valve, and between said primary selector valve and said systems.

5. A hydraulic system in accordance with claim 1, including a unitary, primarily solid body structure provided with bores wherein are arranged respectively all of said valves, assemblies and actuator, said body structure also having passage bores providing said supply and exhaust systems, lines and flow channels, and wherein the bore in which said primary selector valve is arranged is provided with three controlled ports respectively connected with the two expansible chamber assemblies and the cut off valve actuator by communication bores in said body structure, said primary selector valve is also provided with supply and exhaust ports respectively connected with said supply and exhaust systems by communication bores in said body structure, and wherein said primary selector valve comprises a valve body movable in said valve bore and having a formation for selectively connecting, by movement of said body to different positions, said controlled ports with said supply and exhaust ports to connect said assemblies and actuator with the supply and exhaust systems in the recited relations.

6. A hydraulic system for controlling operation of a power unit and that includes means providing supply and exhaust systems and a pair of flow channels for parallel connection between either said supply or an exhaust system and a power unit and at least one of which channels comprises a pair of flow passages, a transfer valve having a body movable between three positions respectively blocking both such passages and connecting them in relatively reversed relation to said supply and exhaust systems, a pair of expansible chamber assemblies and biasing means for moving said transfer valve body between its said positions, a cut off valve for the other flow channel including a body movable between positions wherein respectively it blocks and unblocks said other channel and a hydraulic actuator for moving said cut off valve between its said positions, primary selector valve means for controlling actuation of said cut off and transfer valves for selectively unblocking only a single one of said channels and to select the passages of said transfer valve-controlled channel that are respectively connected to the supply and exhaust systems when the latter channel is unblocked, said primary selector valve means comprising a valve casing structure enclosing a valve bore and a valve body rotatable in said bore, said casing structure and body being arranged to provide three valve sections, said casing structure providing a controlled port and supply and exhaust ports for each valve section, said ports of each section entering said bore in spaced arrangement and said body having a valve passage for each section, each said valve passage having openings through the surface of the valve body for registration with the controlled ports and selective registration with the supply and exhaust ports of such section, said controlled ports respectively being connected with said expansible chamber assemblies and actuator and said supply and exhaust ports respectively being connected with said supply and exhaust systems, the positional arrangements of the ports and passage openings of the respective valve sections the controlled ports of which are connected to said assemblies being such as to permit, by rotation of said body to different positions, simultaneous connection of said expansible chamber assemblies both to the same one of said systems or in selected reversed relation to the two systems, and the positional arrangement of ports and passage openings of the third section being such as to connect said actuator to one of said systems for moving said cut off valve body to block said other channel when said expansible chamber assemblies are connected to the different systems and to connect said actuator to the other said system for moving the cut off valve body to unblock said other channel only when said assemblies are connected to the same one of said systems.

7. A hydraulic system according to claim 6, including an auxiliary valve for each said section and including a common port connected with the controlled port of such section and a supply and an exhaust port, and a valve body operable independently of said primary selector valve body for selectively connecting said con-

trolled port to either said supply port or said exhaust port.

8. A hydraulic system according to claim 6, including an auxiliary valve for each said section and including a common port connected with the controlled port of such section and a supply and an exhaust port, and a valve body operable independently of said primary selector valve body for selectively connecting said controlled port to either said supply port or said exhaust port, and a selective control system for said auxiliary valves arranged to selectively connect to the same one of said systems both of the controlled ports that are connected to said expansible chamber assemblies or to simultaneously and in selective reversed relation connect either said assembly to either said system, to actuate the third auxiliary valve to move the cut off valve to its channel-unblocking position only when both said assemblies are connected to the same one of said systems, and to actuate the latter auxiliary valve to move said cut off valve body to its channel-unblocking position only when the two said assemblies are connected to the same one of said systems.

9. A control unit for a hydraulic power unit, comprising a block-like body, bores in said body providing a supply system including a supply input passage, an output passage, an exhaust system, and a pair of flow channels connected parallel between said input and output passages, a cut off valve comprising a valve element arranged in a valve bore in said body for movement between positions respectively blocking and unblocking one said channel, a transfer valve comprising a second valve element arranged in a second valve bore in said body for movement between positions respectively blocking and unblocking the other said channel, hydraulic actuating devices enclosed by said body and arranged respectively for moving said cut off and transfer valve elements, and a primary selector valve comprising a third valve element arranged in a third bore in said body and movable therein for selecting the positions of said cut off and transfer valve elements by controlling connection of said actuating devices to said supply and exhaust systems through communication bores in said body and connecting said actuating devices and said primary selector valve and said primary selector valve and said systems.

10. A control unit for a hydraulic power unit, comprising a block-like body having therein bores providing a supply system including a supply input passage, an output passage, an exhaust system, and a pair of flow channels connected parallel between said input and output passages, a cut off valve comprising a valve element arranged in a valve bore in said body for movement between positions respectively blocking and unblocking one said channel, a flow control valve comprising a second valve element arranged in a second valve bore in said body in series with the cut off valve in said channel, a transfer valve comprising a third valve element arranged in a third valve bore in said body for movement between positions respectively blocking and unblocking the other said channel, hydraulic actuating devices enclosed by said body and arranged respectively for moving said cut off and transfer valves between their positions, and a primary selector valve comprising a fourth valve element arranged in a fourth valve bore in said body for selecting the positions of said cut off and transfer valve elements by controlling connection of the different said actuating devices to said supply and exhaust systems through communication bores in said body which connect said actuating devices and said primary selector valve and said primary selector valve and said systems.

11. A control unit according to claim 10, wherein said body comprises two sections, and wherein said flow-control valve is arranged in one said section and said cut off, transfer and primary control valves all are arranged in the other said section.

12. A control unit in accordance with claim 10, wherein said body comprises two sections having matching surfaces in face to face contact, and wherein reaches of passages forming said channels and systems open through such surfaces in registered relation.

13. A control unit in accordance with claim 10, wherein said body comprises two sections having matching surfaces in face to face contact and through which reaches of passages in the respective sections and forming parts of said systems open in registered relation, and wherein another passage forming a part of one of said systems comprises a groove in one said section, opening through said surface of said section and closed by the matching surface of the other said section.

14. A control unit in accordance with claim 10, wherein said body comprises two sections having matching surfaces in face to face contact and through which reaches of passages in the respective sections and forming parts of said systems and flow channels open through said surfaces in registered relation, and wherein a passage forming part of said exhaust system comprises a groove in one said section and opening through its said surface and said groove extends continuously in surrounding relation to the openings of said flow channel and supply system-providing passages and intersects an exhaust system-providing passage.

15. A control unit for a hydraulic power unit, comprising a block-like body having therein bores providing a supply system including a supply input passage, an output passage, an exhaust system and a pair of flow channels connected parallel between said input and output passages, a cut off valve comprising a valve element arranged in a valve bore in said body for movement between positions respectively blocking and unblocking one said channel, a flow-control valve comprising a second valve element arranged in a second valve bore in said body in series with said cut off valve in said one channel, a transfer valve comprising a third valve element arranged in a third valve bore in said body for movement between positions respectively blocking and unblocking the other said channel, hydraulic actuating devices enclosed by said body and arranged for moving said cut off and transfer valve elements between their different positions and a primary selector valve assembly comprising a fourth valve element movable in a fourth valve bore in said body and having plural controlled ports respectively connected with said actuating devices by communication bores in said body, and plural supply and exhaust ports respectively connectible with said controlled ports by movement of said fourth valve element to different positions, said supply and exhaust ports being connected with said supply and exhaust systems respectively by communication bores in said body.

16. A control unit according to claim 15, wherein said body comprises two sections having matching surfaces in face to face contact, reaches of said channel-forming and exhaust passages in the respective sections opening through said surfaces in registered relation, and wherein said communication bores include supply and exhaust grooves each in one said section and opening through its said surface, said channels respectively being connected with said supply and exhaust ports by bores in said body structure, and respectively intersecting a channel-forming and an exhaust passage where the latter open through said surfaces.

17. A control unit according to claim 15, wherein said body comprises two sections having matching surfaces in face to face contact, said flow-control valve is arranged in one said section that contains a reach of said supply input passage and said transfer valve is arranged in the other said section and the point of connection of said flow channels to said supply input passage is in the section wherein the flow-control valve is arranged, reaches in the respective sections of passages that form parts of said supply and exhaust systems open through said surfaces in registered relation, and wherein said communication bores include supply and exhaust grooves each in a said section and opening through the said surface thereof, said channels respectively being connected with said supply and exhaust ports by communication bores in the body sections in which the transfer valve is arranged, and said grooves respectively intersecting said supply and exhaust-forming passage reaches where the latter open through said surfaces.

18. A control unit according to claim 15, wherein said body comprises two sections having matching surfaces in face to face contact, said flow-control valve is arranged in one said section and said transfer and cut off valves are arranged in the other said section, a reach of said supply input passage is in the section wherein is arranged the flow-control valve and the point of connection of said flow channels to said supply input passage is in that same section, reaches of passages in the respective said sections forming both said flow channels and of a passage forming part of said exhaust system open through said surfaces in registration, and wherein said communication bores include a supply groove in one said section and opening through its said surface, said groove being connected to said supply ports and intersecting the passage forming the flow channel that is blocked and unblocked by the transfer valve, said communication bores also including an exhaust groove in one said section and opening through its said surface, said exhaust groove being connected to said exhaust ports and extending continuously in surrounding relation to said supply groove and flow channel-forming passages and intersecting said exhaust system-forming passage.

19. A control unit in accordance with claim 15, wherein said body comprises two sections having matching surfaces in face to face contact and in one of which sections said primary selector valve assembly is arranged, said primary selector valve assembly includes auxiliary ports selectively connectible with said controlled ports by movement of said fourth valve element to preselected positions, the body section wherein said selector valve assembly is arranged being provided with communication passageways connecting said supply and exhaust ports respectively with said supply and exhaust systems, and the other said section being provided with communication passageways connecting said auxiliary ports with said systems in selected order.

20. A control unit in accordance with claim 15, wherein said body comprises two sections having matching surfaces in face to face contact and in one of which sections said primary selector valve assembly is arranged, said primary selector valve assembly includes auxiliary ports connectible with said controlled ports by movement of said fourth valve element to preselected positions, the body section wherein said selector valve assembly is arranged is provided with supply and exhaust grooves opening through said section surface and respectively connected with said supply and exhaust ports and respectively intersecting different passages that open through said surfaces and that respectively form parts of said supply and exhaust systems, and wherein the other said body section is provided with communication grooves connected with said auxiliary ports and with said supply and exhaust grooves in selected order.

21. A control unit in accordance with claim 15, wherein said body comprises two sections having matching surfaces in face to face contact and in one of which sections said primary selector valve assembly is arranged, said primary selector valve assembly includes auxiliary ports selectively connectible with said controlled ports by movement of said fourth valve element to preselected positions, said body sections wherein said selector valve assembly is arranged being provided with communication passageways connecting said supply and exhaust ports respectively with said supply and exhaust systems, the other body section being provided with plural auxiliary control passageways respectively extending from said auxiliary ports and opening through an external surface of said section in spaced relation, said section also being provided with supply and exhaust passages respectively connected with said systems and one of each of which opens through such external surface adjacent each said auxiliary control passageways, and said unit including plural auxiliary control valves mounted on such external surface and respectively arranged to selectively connect said control passageways with said supply and exhaust passages.

22. A control unit in accordance with claim 15, wherein said body comprises two sections having matching surfaces in face to face contact and in one of which sections said primary selector valve assembly is arranged, said primary selector valve assembly includes auxiliary ports selectively connectible with said controlled ports by movement of said fourth valve element to preselected positions, said body section wherein said selector valve assembly is arranged being provided with supply and exhaust grooves opening through said section surface and respectively connected with said supply and exhaust ports and with said supply and exhaust systems, the other said section being provided with plural auxiliary control passageways respectively extending from said auxiliary ports and opening through an external surface of said body section, said second body section also being provided with supply and exhaust passages respectively connected with said supply and exhaust grooves and opening through said external surface adjacent each said auxiliary control passageway,

and plural auxiliary control valves mounted on said external surface and respectively arranged for selectively connecting said auxiliary control passageways with either said supply or exhaust passages.

23. A system for delivering fluid to a fluid actuated power unit in response to movements of a first of two independently and relatively movable control members and in response to movements of the second said member only while the first occupies a preselected neutral position; said system comprising means defining first and second fluid channels for respective control by the different said members, said channels being connected between a common system input for connection to a source of fluid under pressure and a common output for connection to the same fluid input of a power unit, first and second valves respectively connected in said first and second channels each including a valve body that is movable relative to the valve body of the other, said body of the first valve being movable to and from positions respectively opening and closing said first channel, said body of the second valve being movable by said second control member to regulate flow through said second channel, a cut off valve connected in said second channel in series with said second valve and having a valve body movable between positions wherein respectively it closes and opens said second channel to fluid flow regulated by said second valve, a pair of fluid operated actuator devices one connected with said first valve body and the other with said cut off valve body, and fluid control means for connecting the respective said actuators to exhaust and a source of fluid supply and including a selector device operable by movement of the first said control member to its said neutral position to connect the different said actuator devices with said supply and exhaust respectively in senses to operate them to move said first valve body to its said position closing said first channel and to move said cut off valve body to its said position wherein it opens said second channel, and by movement of said first control member from its said neutral position to connect said actuator devices with supply and exhaust respectively in senses to operate them to move said first and cut off valve bodies respectively to open and close said first and second channels.

24. A system in accordance with claim 23, wherein said first channel comprises a pair of flow passages, and said first valve is a transfer valve of which the said body is movable, from a position blocking both passages of said first channel, selectively in opposite directions respectively to reversely connect one said passage of the first channel with a supply passage communicating with said common input and the other with an exhaust passage.

25. A system in accordance with claim 23, wherein said second channel comprises a pair of flow passages, and said body of the second valve is movable selectively in opposite directions respectively for reversely connecting the different said passages of the second channel with a supply passage communicating with said common input and with an exhaust passage.

26. A system for delivery of fluid to a reversible fluid actuated power unit having a pair of fluid inputs, in response to movements of a first of two independently and relatively movable control members and in response to movements of the second member only while the first occupies a preselected neutral position; said system comprising means defining first and second fluid channels for respective control by the different said members, said channels being connected with a common system input for connection to a source of fluid under pressure, and each said channel comprising a pair of flow lines, corresponding single lines of the different said pairs having common outputs for respective connection to the different ones of the said two power unit inputs, first and second valves respectively connected in said first and second channels and each having a valve body that is movable relative to the valve body of the other, said body of the first valve being movable in opposite directions from a neutral position closing both lines of said first channel respectively to connect the different said lines in reversed senses with said common input and with an exhaust line, said body of the second valve being movable in opposite directions from a centered position respectively to connect said lines of the second channel with said common input and an exhaust line, a cut off valve connected in said second channel in series with said second valve and having a valve body movable between positions wherein respectively it closes and opens both lines of said second channel, a pair of actuator devices respectively connected with said first valve body and with said cut off valve body, and means connecting the respective said actuators to the first said control member and operable by movement of the latter to its said neutral position to move said first valve body to its said position closing said first channel and to move said cut off valve body to its said position wherein it opens said second channel and by movement of said first control member in opposite directions from its said neutral position to move said cut off valve body to its other said position, and to move said valve body of the first valve respectively in opposite directions from its neutral position.

STANLEY A. JACQUES.

References Cited in the file of this patent

UNITED STATES PATENTS

Number	Name	Date
588,946	Bergman	Aug. 31, 1897
651,550	Kron	June 12, 1900
666,429	Lindstrom	Jan. 22, 1901
1,375,269	Akemann	Apr. 19, 1921
1,806,669	Campbell	May 26, 1931
2,175,800	Hodgman	Oct. 10, 1939
2,189,823	Vickers et al.	Feb. 13, 1940
2,262,126	Whittles	Nov. 11, 1941
2,512,013	Down	June 20, 1950

FOREIGN PATENTS

Number	Country	Date
557,584	Germany	Aug. 25, 1932