June 17, 1947. E. E. ARQUETTE 2,422,461

METHOD FOR MANUFACTURING FACED BUILDING UNITS

Filed Dec. 13, 1944 2 Sheets-Sheet 1

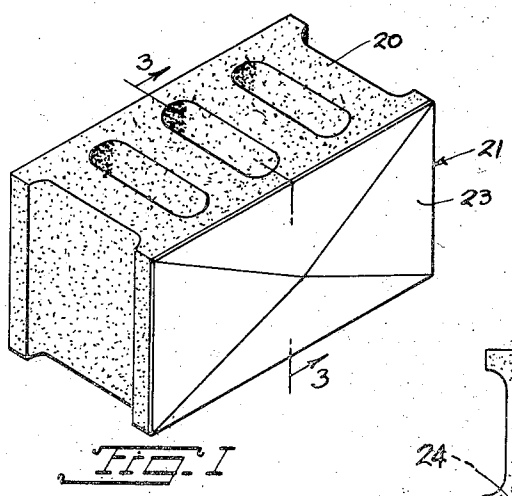

FIG. 1

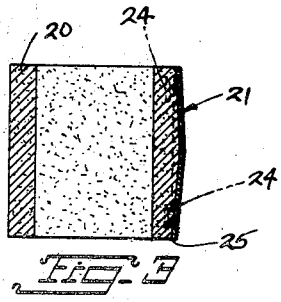

FIG. 3

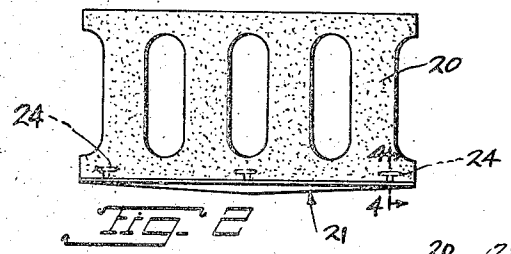

FIG. 2

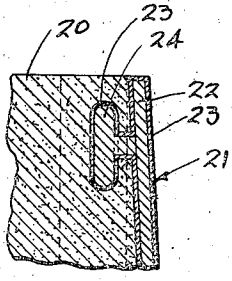

FIG. 4

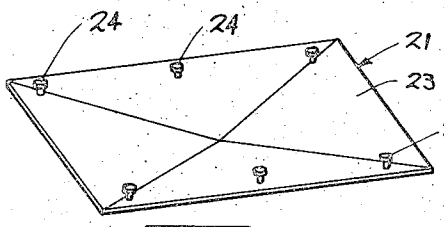

FIG. 5

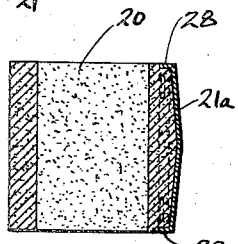

FIG. 6

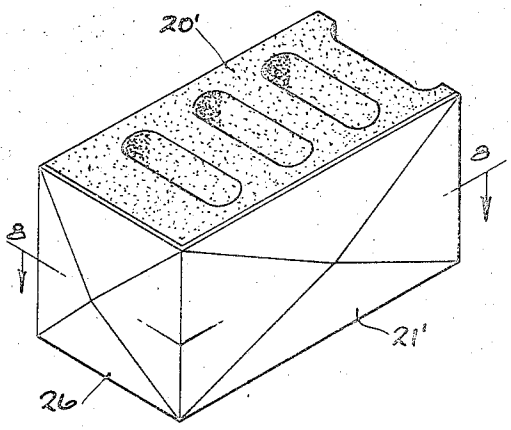

FIG. 7

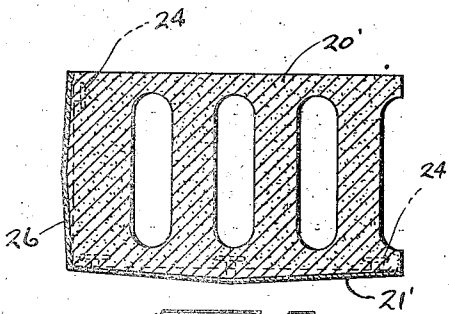

FIG. 8

INVENTOR.
EARL E. ARQUETTE
BY
ATTORNEY.

June 17, 1947. E. E. ARQUETTE 2,422,461

METHOD FOR MANUFACTURING FACED BUILDING UNITS

Filed Dec. 13, 1944 2 Sheets-Sheet 2

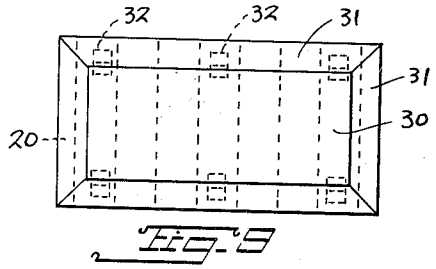

Fig. 9

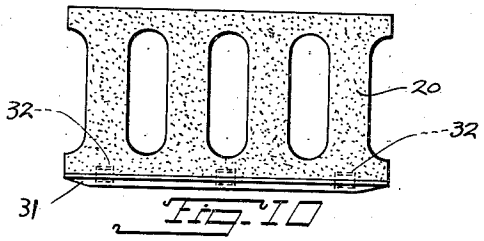

Fig. 10

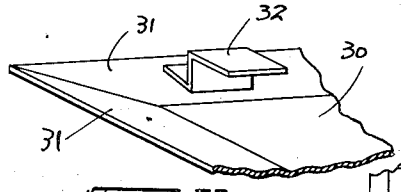

Fig. 11

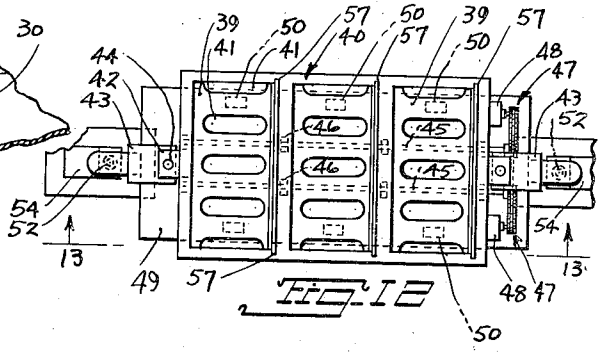

Fig. 12

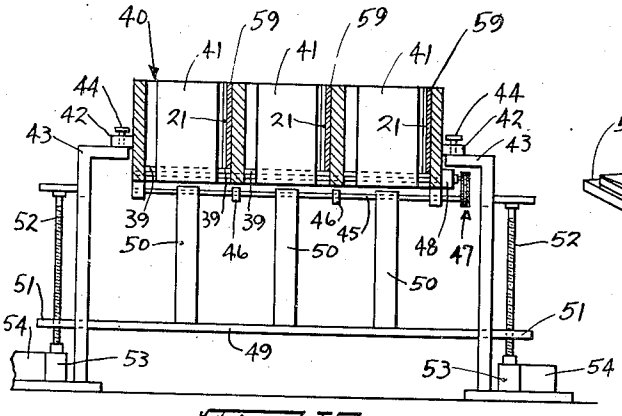

Fig. 13

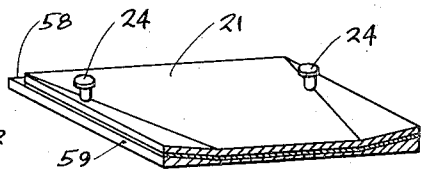

Fig. 14

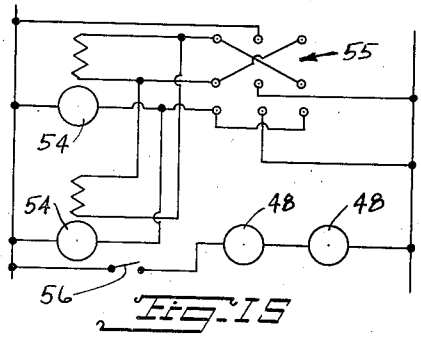

Fig. 15

INVENTOR.
EARL E. ARQUETTE
BY
ATTORNEY.

Patented June 17, 1947

2,422,461

UNITED STATES PATENT OFFICE

2,422,461

METHOD FOR MANUFACTURING FACED BUILDING UNITS

Earl E. Arquette, Milton, Mass.

Application December 13, 1944, Serial No. 568,002

1 Claim. (Cl. 18—59)

1

This invention relates to new and useful improvements in a method for the manufacture of a faced building unit.

The invention is particularly intended for concrete blocks, though it can be applied to other building units, such as bricks, tile and the like.

Essentially the invention consists in a new method for mounting a facing upon a building unit body, which facing is constructed from a metal sheet having its faces covered with and protected by a ceramic material, preferably porcelain, though of course, other materials of this class may be used.

The product produced by the new method adds a beauty to concrete structures never before accomplished. It lends cleanliness and acts as an insulator. Any color, or design can be worked out, as an individual unit, or collectively in as many units as desired. A basement wall, for an example, can have a hunting or any outdoor scene incorporated in the structure when the basement is being laid out. A gas station can have the history of the petroleum industry worked into the facings. A child's playroom in the basement can have Mickey Mouse cartoons, or other animal scenes.

Another important object of this invention is to provide a method by which the faced building units may be made by high speed production methods of fabrication. Essentially, the new method is characterized by the fact that a protective covering is initially mounted on the outer face of the facing before it is connected with the building unit body. Because of this protective covering it is possible to carry out the usual method of constructing a building unit, and to incorporate the facing without any material change. This lends itself to manufacturing the new faced building units on conventional building block machines, or other machines now needed in producing building units. The only change needed would be to alter the mold, or molds of the machine so as to adapt it to receive the facing, or facings. Otherwise, the regular process of manufacturing the building unit may be carried out. Of course, after the building unit is finished it is necessary that the protective covering be removed. If desired, the protective covering need not be removed until the building unit is actually used in construction work. This will have a further advantage of protecting the face of the building unit from damage during the construction work.

The new and improved method for constructing the faced building unit, in accordance with this

2

invention, may be reviewed by stating that it is first necessary to attach a protective covering on the outer face of the facing for the building unit. It is then necessary to place the protective covering into a building unit mold with the protective covering engaging one side of the mold. The mold may then be packed with concrete or other material, in the usual way to form the body of the building unit. The packing may be accomplished with vibration, or with tampers, or with any other means generally used. The faced green building unit must next be stripped from the mold. The unit is then cured in the usual way, and finally the protective covering is removed.

The invention also proposes a method for manufacturing a faced building unit which may be carried out at a low cost.

For further comprehension of the invention, and of the objects and advantages thereof, reference willl be had to the following description and accompanying drawings, and to the appended claim in which the various novel features of the invention are more particularly set forth.

In the accompanying drawings forming a material part of this disclosure:

Fig. 1 is a perspective view of a faced building unit constructed in accordance with this invention.

Fig. 2 is a plan view of Fig. 1.

Fig. 3 is a vertical sectional view taken on the line 3—3 of Fig. 1.

Fig. 4 is a fragmentary enlarged vertical sectional view taken on the line 4—4 of Fig. 2.

Fig. 5 is a perspective view of the facing, per se used on the building unit illustrated in Figs. 1 to 4, but viewed from the back.

Fig. 6 is a sectional view similar to Fig. 3 but illustrating a building unit constructed with a facing in accordance with a modified form of this invention.

Fig. 7 is a perspective view of a faced building unit disclosing another embodiment of this invention.

Fig. 8 is a horizontal sectional view taken on the line 8—8 of Fig. 7.

Fig. 9 is a front elevational view of another faced building unit, constructed in accordance with another embodiment of this invention.

Fig. 10 is a plan view of Fig. 9.

Fig. 11 is a fragmentary enlarged perspective view of a corner of the facing shown in Figs. 9 and 10, but viewed from the back.

Fig. 12 is a plan view of apparatus which may be used to carry out the new method for manu-

facturing faced building units in accordance with this invention.

Fig. 13 is a vertical sectional view taken on the line 13—13 of Fig. 12.

Fig. 14 is a sectional perspective view of a facing for a building unit shown provided with a protective covering in accordance with this invention.

Fig. 15 is a schematic wiring diagram of the apparatus shown in Figs. 12 and 13.

The faced building unit, which is to be constructed in accordance with this invention, includes a building unit body 20 provided with a facing 21 mounted thereon and constructed from a metal sheet 22 having its faces permanently covered with ceramic material 23, see Fig. 4. The building unit body 20 may be of concrete, if the unit is a concrete block. It may be of other material, if the unit is a brick, a tile or other building unit. Preferably, the ceramic material 23 is porcelain. This material has been found to be ideal for use with concrete building blocks. Of course, other ceramic materials may be used. The facing 21 extends across one side of the unit body 20. This is the side which will be outside when a wall is built. The edges of the facing 21 are flush with the edges of the building unit body 20.

The metal sheet 22 from which the facing 21 is constructed, is bent into a stiffening shape. The shape illustrated is pyramidal. This shape is only shown by way of example, other stiffening shapes may be used. The advantages are obvious. It is possible to construct the stiffened facing from a lighter gauge of sheet metal.

A plurality of fasteners 24 are mounted upon the back face of the facing 21, and are embedded in the material of the building unit body for assisting in holding the facing in position. These fasteners 24 are illustrated as headed studs. Of course, they may be of other forms. It is important that the fasteners 24 be also covered with ceramic material 23, see Fig. 4. This protects the fasteners. Concrete blocks are quite porous and moisture would easily reach the fasteners 24, and the back faces of the facings 21. This is the reason why it is proposed protecting these surfaces with ceramic material which is non-porous. It is proposed that the edges of the facings 21, and particularly the bottom edges be provided with draining surfaces 25. It should be noted that these draining surfaces have no pockets which could possibly collect or hold water. All moisture draining down the inner faces of the facings 21 will drain off. This reduces the possibility of corrosion.

In Fig. 6 another embodiment of a faced building unit has been disclosed which distinguishes from the prior form, in the fact that the facing 21*a* has been formed with rearwardly extending edge flange portions 28. These flange portions 28 extend around all the sides of the facing 21*a*. It is pointed out that these flange portions do not interfere with the free draining off of moisture from the inner faces of the facings 21*a*.

In other respects this form of building unit is identical to the prior form, and like parts may be recognized by the same reference numerals.

In Figs. 7 and 8 another embodiment of faced building unit has been disclosed, which is essentially the same as the first form of this disclosure, distinguishing merely in the fact that the facing 21′ is slightly longer than the facing 21, and is bent and extends around one end of the building unit 20′ in addition to extending across one side of said unit. The end 26 of said facing is also bent into a stiffening shape. It is illustrated as a pyramidal shape.

In other respects this form of building unit is identical to the prior form and identical parts may be recognized by the same reference numerals.

In Figs. 9 to 11 still another form of building unit is disclosed which is similar to the first form of this disclosure, distinguishing merely in the fact that the building unit body 20 is provided with a reinforced flat facing 30 which merely has its edge portions 31 bent rearwards so as to stiffen and reinforce the facing. In other words, the facing 30 is merely of a different design than the prior disclosed facings.

The facing 30 is also shown provided with a modified form of fasteners 32 for assisting in holding it upon the building unit body 20. These fasteners 32 are strips of metal of zig zag shape. They are welded upon the back of the facing 30.

In other respects this form of building unit is identical to the prior forms. It must be recognized that the facing 30 and the fasteners 32 are protected with ceramic material, as described in the first form of the invention.

Figs. 12 to 15 inclusive, disclose an apparatus with which the new method for making faced building units, in accordance with this invention, can be carried out. This apparatus is more or less schematic. It is intended to simulate a standard concrete block machine. However, the disclosed apparatus is sufficient to carry out the steps of the new and improved method.

The apparatus for carrying out the method, includes a mold 40 having the usual cores 41, for receiving and shaping concrete, or other material to form a building unit. The mold 40 is supported by side lugs 42 which in turn are supported on standards 43. Headed pins 44 are mounted on the standards 43 and passed through the lugs 42 for guiding the mold 40 to move in a vertical direction and for limiting the amount through which the mold may move. A vibrator is mounted on the mold 40 for vibrating it upwards and downwards and includes shafts 45 rotatably mounted across the bottom of the mold 40 and provided with several off-center weights 46. The shafts 45 are connected by transmissions 47 with electric motors 48. When the shafts 45 rotate, the weights 46 will throw the mold 40 up, and then throw the mold 40 down, causing the vibrations.

A stripping mechanism is associated with the mold 40 for stripping out the finished building units. This stripping mechanism includes platform 49 having a group of vertically extending lift fingers 50 which are intended to be engaged against the bottom faces of the pallets 39 placed into the mold 40, for lifting the building units out of the mold. The platform 49 is provided with lugs 51 by which it is supported. These lugs 51 are threadedly mounted on vertical screws 52 which in turn are connected with gear reduction units 53 driven by motors 54 which are connected in parallel. A reversing switch 55 is connected in series with said motors 54 and is capable of controlling the direction in which the motors operate. The vibrator motors 48 are controlled by a switch 56.

The mold 40 is formed with grooves 57 adjacent one side of each compartment for the building units. These grooves 57 are adapted to receive projecting portions 58 upon the ends of protective coverings, such as the protective cov-

ering 59 of the facing 21. The protective covering 59 may be of paper mache or paper, or other suitable protective material. If the facing 21 has a straight outer face sheet paper may be used as the protective covering. If the facing 21 is bent so as to stiffen it, it is advisable that the protective covering 59 conform to the bent face of the facing 21, and that it have a straight outer face for engaging the side of the mold with which it is used.

The operation of the new and improved method for manufacturing a faced building unit in accordance with this invention, is as follows:

The facings 21 are protected with protective covering material 59. This material may be pasted or cemented on the facings. The protective covering 59 must be of a character so that it may be easily removed, when desired. Paper mache, or paper, is preferable, but other substitutes can be used, for example, glue compositions. It may be peeled, or washed off, when desired. A suitable glue compound would be a mixture of glue and cotton, or other similar materials.

The facings 21 with the protective coverings 59 are dropped into the mold 49. The particular mold shown on the drawings, is capable of making three building units at one time. For this reason it is necessary that three of the facings 21 be placed in the three compartments of the mold 40. The projecting ends 58 of the coverings 59 will ride in the grooves 57 of the mold 40.

The mold 40 is then packed with the material from which the building unit body is to be made. This material may be concrete, if the units are to be concrete block units. The concrete material is packed in the mold 40 by setting the vibrator into operation. The mold is then vibrated and becomes packed. The disclosure is illustrative.

The intension is that the mold 40 can be packed in accordance with any of the systems used by the present day building units machines. After the mold has been packed, it is then ready to be stripped. The switch 55 is closed in one direction to cause the motors 54 to rotate so as to drive the screws 52 to raise the platform 49. The fingers 50 of the platform 49 engage against the pallets 39 upon which the building units in the mold 40 were formed, lifting the units upwardly and out of the mold. The units may now be removed, and cured in the usual way. The facings 21 become permanently attached to the

building unit bodies. The protective coverings 59 may be removed after the building units have been cured, or they may be removed after a wall using the units has been built.

While I have illustrated and described the preferred embodiments of my invention, it is to be understood that I do not limit myself to the precise constructions herein disclosed and the right is reserved to all changes and modifications coming within the scope of the invention as defined in the appended claim.

Having thus described my invention, what I claim as new and desire to secure by United States Letters Patent is:

A method for manufacturing a faced building unit, consisting in attaching a protective covering on the outer face of a facing for a building unit so that its edge portions project from the edge portions of said facing, placing said protected facing into a building unit mold having grooves with the protective covering engaging one side of said mold and with the projecting edge portions of said protective covering engaging into said grooves for holding the facing in position, packing said mold with the material which is to form the body of the building unit, stripping said faced building unit from said mold, and removing said protective covering from the outer face of said building unit.

EARL E. ARQUETTE.

REFERENCES CITED

The following references are of record in the file of this patent:

UNITED STATES PATENTS

Number	Name	Date
1,898,864	Young	Feb. 21, 1933
1,915,896	Maul	June 27, 1933
1,949,079	Loeffler	Feb. 27, 1934
2,371,124	Austin et al.	Mar. 13, 1945
2,293,914	Nanfeldt	Aug. 25, 1942
2,313,985	Bradshaw	Mar. 16, 1943
2,333,679	Schoonover et al.	Nov. 9, 1943
1,676,153	Palmer	July 3, 1928
2,020,255	Copeman	Nov. 5, 1935

OTHER REFERENCES

Cry-O-Vac Protection for Poultry, Copyright 1939, Dewey and Almy Chemical Co.