P/CO/001
Section 29

AUSTRALIA
Patents Act 1990

662989

PATENT REQUEST : STANDARD PATENT

The person identified below as the Applicant requests the grant of a patent to the person identified below as the Nominated Person, for an invention described in the accompanying standard complete specification.

Applicant:	AEROSPATIALE SOCIETE NATIONALE INDUSTRIELLE
Address:	37 boulevard de Montmorency, F-75781 PARIS, CEDEX 16, FRANCE
Nominated Person:	AEROSPATIALE SOCIETE NATIONALE INDUSTRIELLE
Address:	37 boulevard de Montmorency, F-75781 PARIS, CEDEX 16, FRANCE
Invention Title:	VESSEL FOR STORING FLUID UNDER PRESSURE AND ABLE TO UNDERGO RUPTURE WITHOUT CRACKING OPEN
Names of Actual Inventors:	Pascal Didier Coquet and Pierre Schaeffner
Address for Service:	GRIFFITH HACK & CO 168 WALKER STREET NORTH SYDNEY NSW 2060
Attorney Code:	GH

BASIC CONVENTION APPLICATION DETAILS

Application No	Country	Country Code	Date of Application
92 09323	France	FR	23 July 1992

S 039147 220793

DATED this 22nd day of July 1993

AEROSPATIALE SOCIETE NATIONALE INDUSTRIELLE
By their Patent Attorney

GRIFFITH HACK & CO

P/00/008
Section 29(1)
Regulation 3.1(2)

AUSTRALIA
Patents Act 1990

NOTICE OF ENTITLEMENT

We AEROSPATIALE SOCIETE NATIONALE INDUSTRIELLE

of 37 Boulevard de Montmorency, F-75781 PARIS, CEDEX 16, FRANCE

being the Applicant and Nominated Person, in respect of Application No.42139/93, entitled VESSEL FOR STORING FLUID UNDER PRESSURE AND ABLE TO UNDERGO RUPTURE WITHOUT CRACKING OPEN state the following:

Pascal Didier Coquet made the invention for and on benalf of the nominated person in the course of his duties as an employee of the nominated person.
Pierre Schaeffner transferred his rights in the invention tc the nominated person by way of assignment.

Convention priority is claimed from the following basic application(s):

Basic Applicant	Application Number	Application Date	Country	Country Code
AEROSPATIALE SOCIETE NATIONALE INDUSTRIELLE	92 09323	23 July 1992	France	FR

The basic application was the first application made in a Convention country in respect of the invention the subject of this request.

DATED this 30th day of November 1993

AEROSPATIALE SOCIETE NATIONALE INDUSTRIELLE
By their Patent Attorney



GRIFFITH HACK & CO

OUR REF: P20233-F:RPW

AU9342139

(12) PATENT ABRIDGMENT (11) Document No. AU-B-42139/93
(19) AUSTRALIAN PATENT OFFICE (10) Acceptance No. 662989

(54) Title
VESSEL FOR STORING FLUID UNDER PRESSURE AND ABLE TO UNDERGO RUPTURE WITHOUT CRACKING OPEN

International Patent Classification(s)
(51)[5] F17C 001/06

(21) Application No. : 42139/93 (22) Application Date : 22.07.93

(30) Priority Data

(31) Number	(32) Date	(33) Country
92 09323	23.07.92	FR FRANCE

(43) Publication Date : 27.01.94

(44) Publication Date of Accepted Application : 21.09.95

(71) Applicant(s)
AEROSPATIALE SOCIETE NATIONALE INDUSTRIELLE

(72) Inventor(s)
PASCAL DIDIER COQUET; PIERRE SCHAEFFNER

(74) Attorney or Agent
GRIFFITH HACK & CO. , GPO Box 4164, SYDNEY NSW 2001

(56) Prior Art Documents
EP 191655
US 3655085
US 3486655

(57) Claim

1. A vessel for storing fluid under pressure including:

an internal casing having a central cylindrical portion, and first and second extremity portions, one of the extremity portions protruding to a terminal boss that is centered with respect to a longitudinal axis of the internal casing;

an outer hooping of reinforcing fibers coated with a thermoplastic or thermosetting binder surrounding the internal casing and including:

at least one layer of longitudinal fibers placed around the internal casing in a planar manner with a winding angle α as close as possible to being substantially parallel to the longitudinal axis of the internal casing without overlapping the terminal boss; and

at least one layer of fibers placed with a winding angle α_n, with respect to the longitudinal axis of the internal casing, that is between the winding angle α of the at least one layer of longitudinal fibers and an angle 90° to the longitudinal axis.

P/00/011
Regulation 3.2

AUSTRALIA
Patents Act 1990

662989

ORIGINAL

COMPLETE SPECIFICATION

STANDARD PATENT

Invention Title: VESSEL FOR STORING FLUID UNDER PRESSURE AND ABLE TO UNDERGO RUPTURE WITHOUT CRACKING OPEN

The following statement is a full description of this invention, including the best method of performing it known to us:

GH&CO REF: P20233-F:RPW:RK

VESSEL FOR STORING FLUID UNDER PRESSURE AND ABLE TO UNDERGO RUPTURE WITHOUT CRACKING OPEN

The present invention concerns vessels for storing fluid under pressure and more particularly, but not exclusively, vessels of the bottle type for storing gas, such as air, oxygen, nitrogen, carbon dioxide, used in various industrial areas.

More specifically, the invention concerns bottles of the type comprising an internal casing that is symmetric about a longitudinal axis and has a cylindrical portion or pipe section and two extremity portions, one extremity portion protruding outwardly, with the internal casing being surrounded by a hooping of reinforcing fiber windings coated with a suitable binder.

When such vessels break, this generally occurs along the pipe section of the casing, which opens suddenly. This occurs usually when the vessel contains a gas under high pressure and such a rupture may cause the projectile release of dangerous metal fragments, posing a threat to any persons located nearby. Moreover, a recent official standard provides that this type of vessel is required to satisfy an under pressure rupture test such that any rupture occurs without fragmentation of the internal casing of the vessel.

It would be advantageous if at least preferred forms of the present invention provided a vessel of this type meeting the requirements of this official standard.

The present invention provides a vessel for storing fluid under pressure including:

an internal casing having a central cylindrical portion, and first and second extremity portions, one of the extremity portions protruding to a terminal boss that is centered with respect to a longitudinal axis of the internal casing;

an outer hooping of reinforcing fibers coated with a thermoplastic or thermosetting binder surrounding the internal casing and including:

AUSTRALIAN PATENT OFFICE

at least one layer of longitudinal fibers placed around the internal casing in a planar manner with a winding angle α as close as possible to being substantially parallel to the longitudinal axis of the internal casing without overlapping the terminal boss; and

at least one layer of fibers placed with a winding angle α_n, with respect to the longitudinal axis of the internal casing, that is between the winding angle α of the at least one layer of longitudinal fibers and an angle 90° to the longitudinal axis.

Vessels resist bursting mainly through circumferential fibers; longitudinal fibers placed according to a flat or geodesic winding pattern are mainly intended to absorb axial forces on the vessel, because they exhibit a winding angle with respect to the longitudinal axis of the vessel which is too small to take up the circumferential rupture forces on bursting. A preferred vessel conforming to the present invention may well satisfy the legal requirements concerning bursting without fragmentation of the internal casing due to the fact that the rupture forces may no longer necessarily be exclusively borne by any circumferential layers. Instead the forces are partly taken up by the layer of fibers wound under an intermediate angle between 90° and that of the longitudinal fibers. These fibers take up and distribute the force initially absorbed by the circumferential layers when the vessel breaks.

Preferably at least one layer of circumferential fibers is also placed circumferentially about the internal casing to have a winding angle of substantially 90° with respect to the longitudinal axis of the internal casing.

Advantageously, the layer of fibers having a winding pattern that is flat or helical exhibits a winding angle equal to 90° less than the winding angle of the longitudinal fibers. Moreover, several layers of fibers can be provided that have different winding angles, for

AUSTRALIAN PATENT OFFICE

example at various stages between the value of 90° and that of the longitudinal fibers.

These layers each actively and successively participate in taking up the rupture forces by absorbing and distributing excessive force once circumferential fibers have ruptured (ie. the sequence of uptake being defined according to their respective winding angle).

Thus, instead of having a sudden bursting when the vessel breaks, in at least preferred forms there is a cascade rupture of the circumferential fibers and then of the fibers windings having an intermediate angle, starting with those fibers with a winding angle closest to 90° and progressing. This results in a "soft" tearing of the vessel without fragmentary rupture of the internal casing (eg. so as to approach and/or meet the requirements set by the official standards).

Other characteristics and advantages shall appear more readily from a reading of a description of a preferred embodiment of a vessel according to the invention, this description being given solely by way of example and with reference to the accompanying drawings in which:

- Figure 1a and 1b are diagrams showing flat and helical winding patterns respectively; and
- Figure 2 is a view showing a winding method of fibers in accordance with the invention on a cylinder, such as a vessel pipe section.

Figures 1a and 1b diagrammatically show at 1 a vessel formed of a cylindrical central body or pipe section 2 extended at its two extremities by an end piece 3 protruding outwardly and having a boss of revolution 4 coaxial with the axis 5 of the pipe section 2.

In Figure 1a, a fiber symbolized at 6 is wound flat in that the bobbin unwinding the fiber 6 still moves within a given plane during winding of the vessel 1 which rotates around its axis 5.

AUSTRALIAN PATENT OFFICE

The angle α the plane makes, in which the bobbin moves by rotating around the vessel with respect to the axis 5, is known as the winding angle.

There typically exists at least at one of the extremities, a type of boss 4 (and on which a connection end piece (not shown) is mounted for filling and emptying the vessel). Bosses 4 at the extremities must not be overlapped by fiber, and thus the angle α shown on Figure 1a corresponds to a placing of fibers flush with the bosses 4 and is accordingly the minimal winding angle.

The minimal angle α depends on the morphology and dimensions of a given vessel. For normal vessels or bottles, this angle is about 20°.

Bottles of the type with an internal casing or a metallic liner covered with a winding of reinforcing fiber windings coated with a suitable binder, firstly include layers of fibers wound according to the winding mode shown in Figure 1a and known as longitudinal fibers and having a winding angle α, for example of about 20°, and secondly layers of fibers wound circumferentially on the pipe section of the bottle. These bottles may constitute a danger should accidental bursting occur.

In such vessels, only the circumferential fibers are able to resist the rupture forces on bursting, and the longitudinal fibers do not offer much resistance because the rupture stresses on bursting are mainly exerted on the pipe section to generate circumferential traction forces which the longitudinal fibers are unable to take up owing to their inclination. As a result, a sudden rupture of the circumferential fibers when their limit of resistance is reached is likely to result in fragmentation of the metallic internal casing and projection of splinters.

A conventional covering of the internal casing or liner, especially a metallic liner, is achieved by winding fibers firstly circumferentially facing the pipe section and secondly longitudinally. In preferred embodiments, however, this covering is replaced by

another covering including fibers wound according to one or several intermediate angles between the winding angle of the circumferential fibers and the winding angle of the longitudinal fibers.

Figure 2 diagrammatically shows the pipe section of a vessel with an internal casing. Various layers of fibers are placed on this pipe section 2.

A fiber is placed circumferentially at C and forms an angle almost equal to 90° with a generating line 7 of the pipe section 2. A longitudinal fiber is shown at L and is wound on the pipe section at a minimum angle α with respect to the generating line 7. Preferably fibers are then placed along intermediate angles between said 90° and α, the fibers also being designated as longitudinal fibers and allocated with a different index according to their angle of winding.

Figure 2 shows six fibers, respectively L_1 to L_6, having angles of winding α_1 to α_6 respectively of increasing values stepped between α and 90°. Thus, the layers of longitudinal fibers L to L_6 exhibit between them a stress gradient or a resistance to progressive bursting gradient, the maximum stress tolerated by the fibers wound at angle α_6 (the closest to 90°) being slightly smaller than that of the circumferential fibers C but significantly larger than that of the fibers wound at angle α_5; the fibers having a stress resistance much greater than that of the fibers wound at angle α_4, and so on.

The result is that should the circumferential fibers C break, the fibers L_6 then sustain the bulk 20 of the shock, hence the fibers L_5, ultimately resulting in a progressive rupture of all the longitudinal fibers and in turn a progressive rupture of the pipe section (ie. a "soft" tearing without fragmentation of the internal casing).

A single winding angle may be provided between the values of 90° and α, in which case it is preferably that this angle has a value approximately equal to 90° - α.

Several angles are preferably provided whose values are stepped, possibly regularly, for example between the value α and the value of 90° - α. Nevertheless, it is possible to wind longitudinal fibers with an intermediate winding angle of between 90° and 90° - α.

According to one embodiment that is intended to approximately divide into two equal shares the circumferential rupture forces between the circumferential fibers C and all the longitudinal fibers (L, L_1, L_2, L_3 ...), it is possible to provide in addition to the minimal placing angle α nine placing angles α_1 to α_9 for nine layers of fibers L_1 to L_9.

The winding angle α_8 of the layer L_8 may be equal to 90° - α and the placing angle α_9 can be between 90° and 90° - α.

In the case of a vessel with hemispherical extremities, it is possible to envisage having a fan shaped distribution of fibers L_n with graduated winding angles of between 90 and α whilst allowing for a winding of fibers geodesically on the extremities.

The number of winding angles of the longitudinal fibers L_n may vary significantly in the same way as the number of fibers wound under the same angle, as well as the number and stepping of the layers of fibers placed along the various possible angles (L, L_nC) according to the morphology, dimensions and nature of the vessel, the nature of the material constituting the casing (metal or thermoplastic material or elastomer, for example), the nature of the fibers (glass, carbon, Kevlar, for example) and the binder of the matrix (thermoplastic or thermosetting material).

According to the winding angle (α_n), the longitudinal fibers (L_n) of preferred embodiments are placed either via a flat winding (figure 1a) or via a helical winding (Figure 1b). It is to be noted that the implementation of the invention does not necessarily imply an excess dimensioning of the wall of the vessel, that is the adding of additional layers of longitudinal fibers. In

fact, it is preferable to implement the same number of layers of longitudinal fibers for a given type of bottle as in the conventional production mode, but this number of layers shall be distributed on the various layers wound with the various angles in question ($\alpha, \alpha_1, \alpha_2, \alpha_3$, etc). Thus, the overall weight and thickness of the wall of the bottle can be identical to those of a given bottle embodied according to the prior art.

The invention is applicable to any vessel, especially any bottle-type vessel, with a bottom or extremities protruding outwardly, irrespective of the shape of the latter, that is hemispherical, semi-elliptic, oval or Cassini etc.

With the protruding extremities, winding is preferably performed geodesically as far as possible by any method.

The shape of the extremities can of course be optimized according to the number and placing angles of the various longitudinal fibers.

Whilst the invention has been described with reference to a number of preferred embodiments, it should be appreciated that the invention can be embodied in many other forms.

THE CLAIMS DEFINING THE INVENTION ARE AS FOLLOWS:

1. A vessel for storing fluid under pressure including:

an internal casing having a central cylindrical portion, and first and second extremity portions, one of the extremity portions protruding to a terminal boss that is centered with respect to a longitudinal axis of the internal casing;

an outer hooping of reinforcing fibers coated with a thermoplastic or thermosetting binder surrounding the internal casing and including:

at least one layer of longitudinal fibers placed around the internal casing in a planar manner with a winding angle α as close as possible to being substantially parallel to the longitudinal axis of the internal casing without overlapping the terminal boss; and

at least one layer of fibers placed with a winding angle α_n, with respect to the longitudinal axis of the internal casing, that is between the winding angle α of the at least one layer of longitudinal fibers and an angle 90° to the longitudinal axis.

2. A vessel as claimed in claim 1, wherein at least one layer of circumferential fibers is also placed circumferentially about the internal casing to have a winding angle of substantially 90° with respect to the longitudinal axis of the internal casing.

3. A vessel as claimed in claim 1 or claim 2, wherein the winding angle α_n is 90° minus the winding angle α.

4. A vessel as claimed in any one of the preceding claims, including a plurality of layers wound with a winding angle α_n, each layer having a different winding angle α_n.

5. A vessel as claimed in claim 4, wherein the different winding angles α_n are staggered between 90° and the winding angle α of the at least one longitudinal layer.

6. A vessel as claimed in claim 4 or claim 5, wherein one of the different winding angles α_n has a value equal to 90° minus the winding angle α of the at least one layer of longitudinal fibers, with the other of the different winding angles α_n being distributed on both sides of the one different winding angle α_n.

7. A vessel as claimed in any one of the preceding claims, including a plurality of layers of circumferential fibers, a plurality of layers of longitudinal fibers with a winding angle α, and a plurality of layers of fibers placed with a winding angle α_n.

8. A vessel as claimed in any one of the preceding claims, wherein the fibers placed with a winding angle α_n are planarly positioned.

9. A vessel as claimed in any one of claims 1 to 7, wherein the fibers placed with a winding angle α_n are helically positioned.

10. A vessel for storing fluid under pressure substantially as herein described with reference to the accompanying drawings.

Dated this 10th day of July 1995

AEROSPATIALE SOCIETE NATIONALE INDUSTRIELLE

By their Patent Attorneys

GRIFFITH HACK & CO

S:20233F/10.7.95

ABSTRACT
========

The invention concerns a vessel of the type comprising an internal casing with a form of revolution around a longitudinal axis (5) and having one central pipe section (2) and two extremity portions (3), at least one of said extremity portion bulging outwardly, a hooping of reinforcing resistant fibers coated with a thermoplastic of thermosetting binder surrounding said casing, and opposite the pipe section (2), having at least one layer of fibers placed circumferentially and known as circumferential fibers (C), and at least one layer of fibers, known as longitudinal fibers (L), placed flat under a winding angle as small as possible so as to allow said bulged extremity (3) to free a cap (4) centered on said longitudinal axis, wherein said pipe section (2) further comprises at least one layer of fibers (L) placed flat or helically with a winding angle (α_n) of between that (α) of said longitudinal fibers and 90°.

To be used more particularly for gas storage bottles.

FIGURE 2

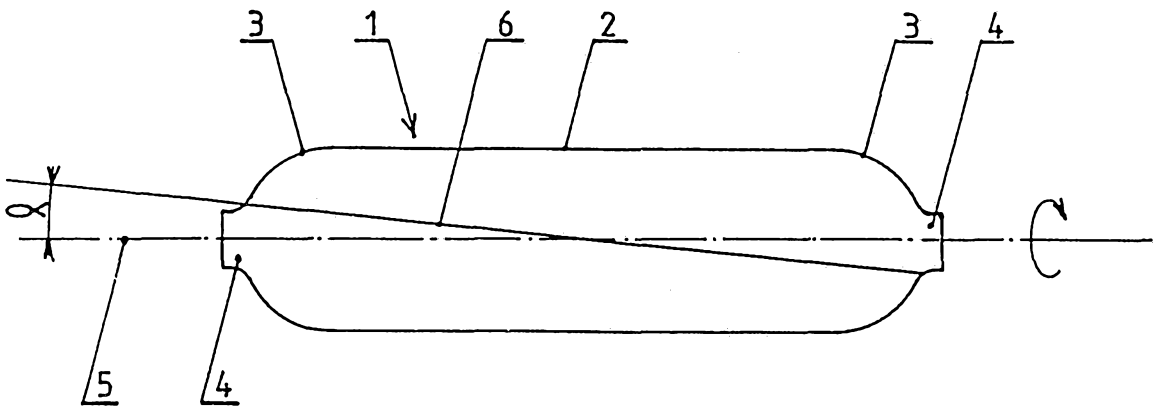

FIG_1a_

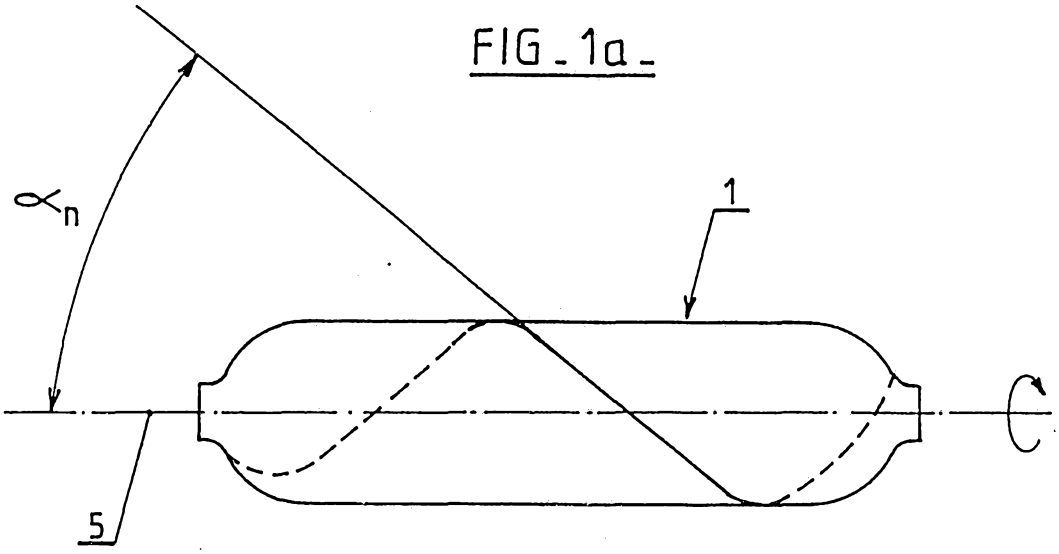

FIG_1b_

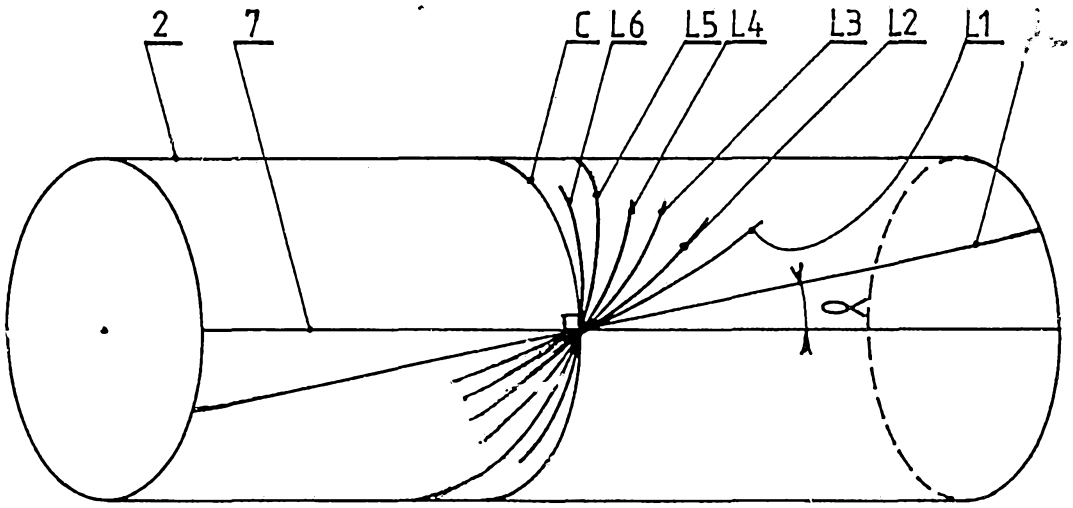

FIG_2_