March 14, 1961 A. LEVIN 2,974,724

AIR BLEED VALVE

Filed Jan. 2, 1959

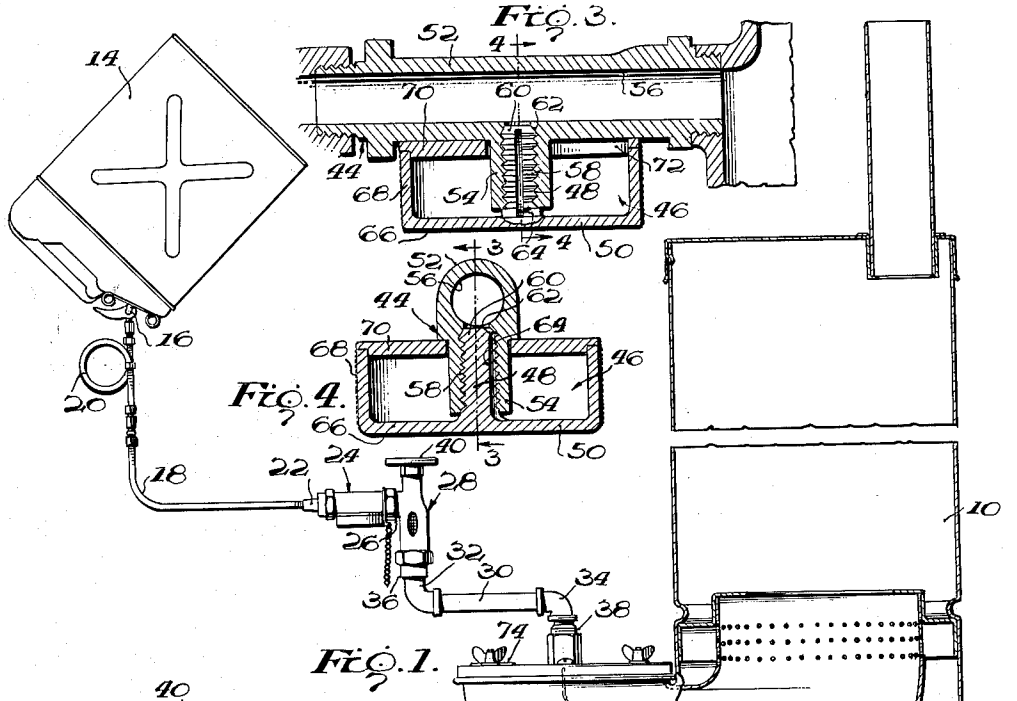

Fig. 1.

Fig. 3.

Fig. 4.

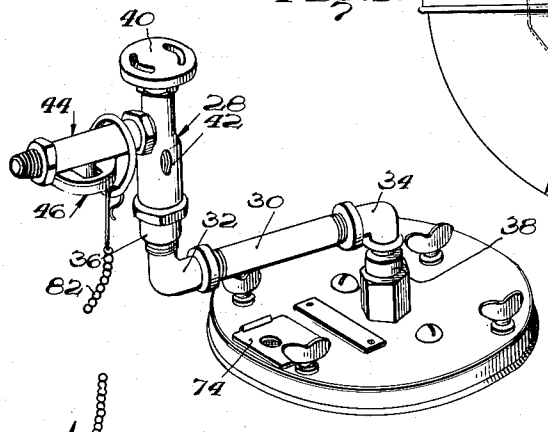

Fig. 2.

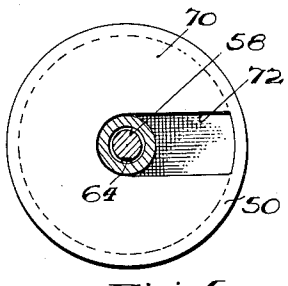

Fig. 5.

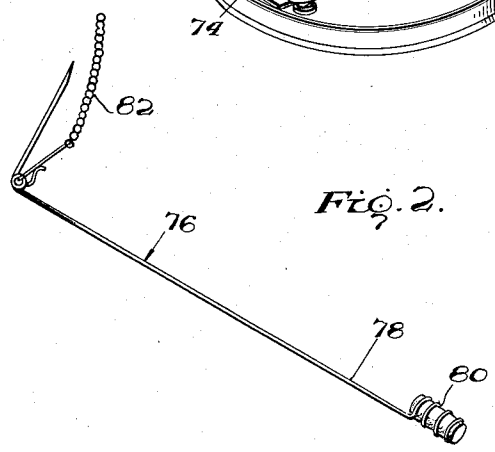

INVENTOR

Alexander Levin

BY W. J. Eccleston.

ATTORNEY

United States Patent Office 2,974,724
Patented Mar. 14, 1961

2,974,724

AIR BLEED VALVE

Alexander Levin, Framingham, Mass., assignor to the United States of America as represented by the Secretary of the Army

Filed Jan. 2, 1959, Ser. No. 784,827

5 Claims. (Cl. 158—36.6)

(Granted under Title 35, U.S. Code (1952), sec. 266)

The invention described herein, if patented, may be manufactured and used by or for the Government for governmental purposes, without the payment to me of any royalty thereon.

The present invention relates to air bleed valves and more particularly to a valve for bleeding air or other gases from a liquid conveying line and for also trapping a small quantity of liquid from the line in a readily accessible trap.

Most of the liquid fuel burners and heaters used by the Armed Forces in the field are fed liquid fuel by gravity from a five-gallon can of the type commonly known as "jerry cans." Gravity feed of the liquid fuel is obtained by mounting the fuel can or reservoir on any suitable structure elevated from the level of the burner or heater. When a can becomes empty, it is replaced with a full can. During the course of this replacement, it is impossible to prevent a head of air from being trapped in the fuel conveying line between its inlet and outlet ends. This may lead to difficulties in starting the heater or burner. The present invention obviates these difficulties by providing means for bleeding this air from the system before an attempt is made to start the heater and to trap a small quantity of the fuel sufficient to soak a small torch of the type commonly used in starting these gravity feed burners.

Accordingly an object of the invention is to provide a new and improved device for bleeding air from a liquid conveying line.

Another object of the invention is to provide a new and improved device for bleeding air from a liquid conveying line which includes a trap outside the line to trap a small quantity or sample of the liquid being conveyed.

Another object of the invention is to provide a new and improved device for bleeding air from the fuel line of a gravity feed burner which includes means for trapping a quantity of the liquid fuel sufficient to soak a torch for starting the burner.

A more general object of the invention is to provide a new and improved mechanism to facilitate the starting of gravity feed liquid fuel burners which is simple and sturdy in construction, inexpensive to manufacture and easy to operate and maintain.

These and other objects, advantages, and capabilities of the invention will become apparent from the following description wherein reference is had to the accompanying drawings in which:

Fig. 1 is a more or less diagrammatic view of a gravity feed liquid fuel burning heater having a gravity feed liquid fuel supply system embodying the improved air bleed and liquid fuel trapping mechanism of the present invention;

Fig. 2 is a perspective view of the burner head for the heater disclosed in Fig. 1 showing the improved mechanism of the present invention in greater detail;

Fig. 3 is a vertical longitudinal or axial sectional view of the improved mechanism of the present invention taken on the plane of the line 3—3 on Fig. 4.

Fig. 4 is a transverse vertical sectional view taken on the plane of the line 4—4 on Fig. 3; and

Fig. 5 is a view partly in horizontal section and partly in top plan showing the top wall of a portion of the improved mechanism of the present invention.

In Fig. 1 there is shown a typical liquid fuel burning heating installation in which the present invention is particularly useful. This installation comprises a housing 10 forming a combustion and heat radiating chamber, a burner 12 for vaporizing liquid fuel and initiating combustion thereof and a reservoir 14 for supplying liquid fuel to the burner. The heater, including the housing 10 and burner 12, may be of known construction, that shown herein being of the type disclosed in United States Patent 2,721,546. Since the heater is fully described in that patent, a further description thereof in this specification is believed to be unnecessary. These heaters were originally designed particularly for use by the Armed Forces in the field, but they are also suitable for use by campers, woodsmen, or in other outdoor pursuits.

The fuel reservoir 14 shown in the drawings preferably comprises a 5-gallon can of the type commonly known as a "jerry can." These cans have heretofore been widely used by the Armed Forces for transporting and storing liquids including liquid fuel. The burner 12 is fed with liquid fuel from the reservoir 14 by a fuel supply system including an adapter 16 which is adapted to be received in the filling and discharge opening with which "jerry cans" are provided in fluid-tight relation thereto. This adapter is of conventional construction and is connected to a suitable fuel conveying conduit such as a rubber or synthetic rubber hose 18 through a drip interceptor 20 preferably of the type described and claimed in United States Patent 2,684,114.

At its outlet end, rubber hose 18 is connected by suitable coupling means 22 to the inlet end of the improved air bleed valve of the present invention which is indicated in its entirety by the number 24 in Fig. 1. The outlet end of this air bleed valve is connected by a coupling member 26 to the inlet side of a burner control valve 28 which has an outlet connected to the inlet to the burner 12 by suitable coupling elements including a straight section of pipe 30, elbows 32 and 34 and coupling members 36 and 38. Burner control valve 28 may be a conventional needle valve of the drip type having a hand knob 40 for adjusting the setting of the needle to control the rate at which liquid fuel is allowed to pass to the burner 12 and completely to close down the flow of fuel to the burner when the heater is to be closed down. To apprise the operator of the rate at which fuel is being fed to the burner 12, the control valve 28 is provided with a glass sight opening 42 through which the rate at which fuel drips from the needle in the control valve can be observed.

Referring to Figs. 3 to 5, it will be seen that the improved air bleed valve of the present invention comprises a generally T-shaped element 44 and a valve member 46 including a threaded stem 48 and a combined hand knob and cup-like reservoir 50. The T-shaped element 44 comprises a tubular portion 52 disposed upon a horizontal axis when the parts are in operative position as indicated in Figs. 1 and 3 and a tubular leg 54 depending from the horizontal tubular portion 52 intermediate the ends thereof. A horizontally extending passageway 56 is thus defined by the horizontally extending tubular portion 52 of the T for conveying liquid from the outlet end of the hose 18 to the inlet side of the control valve 28 by virtue of the connection between these parts as previously described. The passageway 56 is intersected by a bore 58 (Fig. 4) extending axially of the depending leg 54 and threaded to receive the threaded stem 48 of the valve member 46. Valve stem 48 has a tapered tip

60 for engaging a seat 62 adjacent to the upper or inner end of the bore 58 to control communication from the horizontal passageway 56 to the bore 58, the valve stem 48 also having a longitudinally or axially extending groove 64 in its outer periphery through which fluid may escape from the horizontal passageway 56 when the valve tip 60 is unseated as by turning the hand knob 50 in a direction to retract the stem 48.

As best seen in Figs. 3 and 5, the hand knob 50 forming a part of the valve member 46 may be of generally cylindrical cup-like construction. It has a bottom wall 66, an upstanding sidewall 68, and a top wall 70 covering all but a narrow radially extending opening 72 therein having the contour shown in Fig. 5. The outer end of the stem 48 is welded or otherwise rigidly fixed to the center of the bottom wall 66 of the cup-shaped knob 50 so as to extend axially thereof and the inner end of the opening 72 in the top wall 70 is dimensioned to closely encompass the depending leg 54 when the stem 48 is threaded into the bore 58 in this leg. Preferably, the threaded connection between these parts is so calibrated that the opening 72 in the top wall 70 will be aligned with the underside of the horizontal portion 52 of the T-shaped member 44 when the stem has been turned up far enough to close the groove 64 to the passage of fluid so that the horizontal portion of the T acts as a cover for this opening. Preferably, the underside of the horizontal portion 52 of the T is flattened so that a better closure of the opening 72 in the cap thus is obtained.

Lighting of vaporizing burners such as herein disclosed is facilitated if a torch is available to initiate combustion in the burner. Any suitable opening through which access may be had by a torch to the interior of the burner may be used for this purpose. In the heater shown herein, an opening is provided for this purpose in the top closure in the burner head. This opening is covered by a closure 74 (Figs. 1 and 2) during normal operation of the heater. Closure 74 may be releasably locked in closed position by any suitable means. A suitable torch 76 for the heater shown in Fig. 1 comprises an elongated wire handle 78 (Fig. 2) having a quantity of wicking material 80 suitably fixed to one end thereof for absorbing a quantity of liquid fuel. Preferably, the torch is provided with a chain 82 to tether the same to the heater so that it will not become lost in the field.

Briefly to describe the operation of the present invention, it will be assumed that the fuel supply system has been connected to a "jerry can" 14 full of liquid fuel by means of the adapter 16 and that the "jerry can" has been fixed in a position sufficiently elevated to produce the desired head of fuel at the control valve 28. In switching the adapter 16 from an empty to a full "jerry can" to connect the full can into the system a certain amount of air becomes trapped in the adapter and the portion of the fuel supply system immediately downstream of the adapter. This entrapped air tends to interfere with the uniform flow of fuel to the burner, particularly during starting of the burner. In a heater equipped with the present invention, this difficulty is avoided by turning the valve member 46 far enough in an opening direction to open the groove 64 in the stem 48 to the passageway 56 in the T-shaped member 44. This will allow air in the fuel supply system to escape or be by-passed to the atmosphere. After the air has been bled from the system, liquid fuel will escape through this by-pass outlet and will be trapped in the cup-like knob 50. The wick 80 may be soaked in the liquid fuel thus collected in the cup-like knob 50 after which the knob is turned far enough to seat the tapered end 60 of the stem 48 upon the seat 62 and thus close by-pass groove 64.

It will thus be seen that a combined air bleed valve and wick soaking reservoir has been provided which is extremely simple and inexpensive in construction but yet particularly adapted, because of its simplicity, for use under adverse conditions such as encountered by members of the Armed Forces in the field. Another advantage of the invention is the fact that it may be used in conjunction with any of the numerous gravity feed vaporizing type burners and not just the burner herein shown.

While a preferred embodiment of the invention has been shown and described, it will be apparent that variations and modifications thereof may be made without departing from the underlying principles of the invention. It is desired, therefore, by the following claims, to include within the scope of the invention, all such variations and modifications by which substantially the results of the invention may be obtained through the use of substantially the same or equivalent means.

I claim:

1. An air bleed valve for a liquid conveying line comprising means defining a valve chamber adapted to be connected in said line and having a by-pass outlet, a valve seat in said valve chamber, a valve to engage said seat and thereby control communication through said by-pass outlet without impeding flow in said line, valve operating means including a generally cup-shaped member located at a position to be manipulated manually for opening and closing said valve and to catch liquid escaping from said by-pass outlet when said valve is open and cooperating structure on the means defining said valve chamber and said cup-shaped member for closing the latter against access to the interior thereof when the said cup-shaped member is moved into valve-closing position and to open the said cup-shaped member for access to the interior thereof when said cup-shaped member is moved into valve-opening position.

2. An air bleed valve for a liquid conveying line comprising means defining a valve chamber adapted to be connected in said line and having at least one flat downwardly facing area on the exterior thereof and a by-pass outlet, a valve seat in said valve chamber, a valve to engage said seat and thereby control communication through said by-pass outlet without impeding flow in said line, valve operating means including a generally cup-shaped member located at a position to be manipulated manually for opening and closing said valve and to catch liquid escaping from said by-pass outlet when said valve is open and a cover on said cup-shaped member having an opening therein of smaller size than the downwardly facing area and located to be disposed in underlying relation to said flat downwardly facing area when said valve is closed so as to be covered by said area and to be fully exposed when said valve is open so that access may then be had to the interior of the cup-shaped member through said opening.

3. An air bleed valve for a liquid conveying line comprising a generally T-shaped valve chamber including opposed branches and a depending stem to form a by-pass outlet for said chamber, said branches each having a flat downwardly facing side, structure for controlling the discharge of fluid through said by-pass outlet including a valve seat, a head to engage said seat and a valve stem threaded into said by-pass outlet for seating and unseating said head, means for operating said stem to seat and unseat said head including a generally cup-shaped member fixed to said stem at a position to be manipulated manually and to catch liquid discharged through said by-pass outlet, a cover on said cup-shaped member having an opening therein of somewhat smaller size than the downwardly facing side of said branches, said threaded stem being calibrated to bring the opening in said cup-shaped member immediately below the downwardly facing side of one of said branches when said valve is in closed position so that the said opening is substantially completely closed by the said branch.

4. A liquid fuel feeding system for a burner comprising a source of liquid fuel elevated above the level of said burner, a line for gravitationally conveying liquid fuel from said source to said burner, an on-off

valve in said line in close proximity to said burner, a valve in said line on the upstream side of said on-off valve closely adjacent to the latter for bleeding air and liquid fuel from said line and means for trapping liquid fuel discharged by said air bleed valve after air has been bled from the line, said means having an access opening through which a torch may be dipped into the trapped liquid fuel to prepare the torch for lighting the burner.

5. A liquid fuel feeding system for a burner comprising a source of liquid fuel elevated above the level of said burner, a line for gravitationally conveying liquid fuel from said source, an on-off valve in close proximity to said burner, a generally T-shaped member including opposed branches connected respectively to the downstream side of said line and the upstream side of said on-off valve closely adjacent the latter and a projecting stem to form a by-pass outlet for said branches and

valve means to control the discharge through said by-pass outlet including a cup-like knob for manipulating said valve means and for trapping liquid fuel discharged through said by-pass outlet after air has been bled from the line, said cup-like knob having an access opening through which a torch may be dipped into the trapped liquid fuel to prepare the torch for lighting the burner.

References Cited in the file of this patent

UNITED STATES PATENTS

295,315	Wallace et al.	Mar. 18, 1884
1,332,944	Dobrick	Mar. 9, 1920
1,527,269	Peterson	Feb. 24, 1925
2,051,918	Thompson	Aug. 25, 1936

FOREIGN PATENTS

549,830	France	Nov. 28, 1922