Feb. 12, 1935. F. J. GEACH 1,990,863

COLLAPSIBLE TUBE CLOSURE

Filed Nov. 6, 1933

Fig. 1.

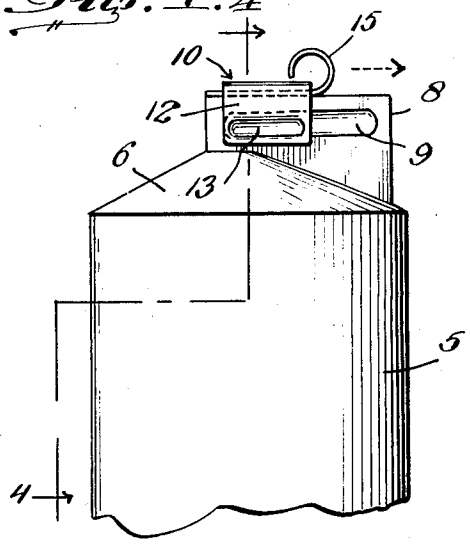

Fig. 2.

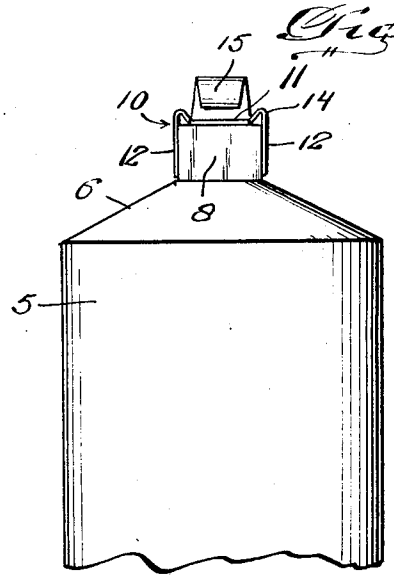

Fig. 3.

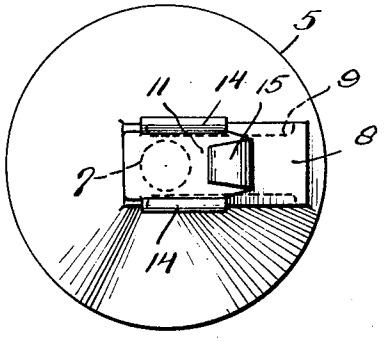

Fig. 4.

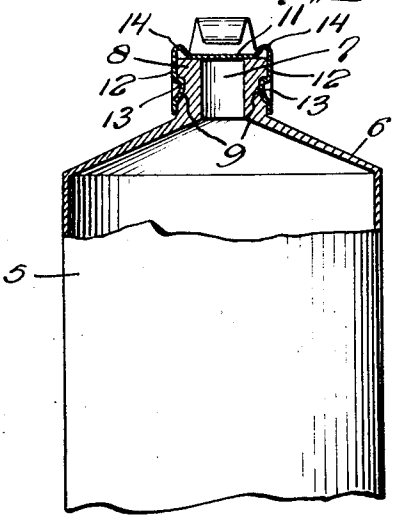

Fig. 5.

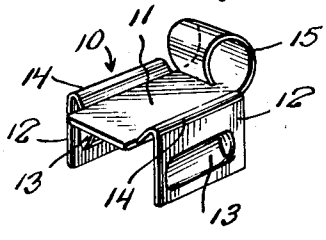

Fred J. Geach,

INVENTOR.

BY J. Stanley Burch

ATTORNEY.

Patented Feb. 12, 1935 1,990,863

UNITED STATES PATENT OFFICE

1,990,863

COLLAPSIBLE TUBE CLOSURE

Fred J. Geach, Martinez, Calif.

Application November 6, 1933, Serial No. 696,879

1 Claim. (Cl. 221—60)

This invention relates to improvements in closures for collapsible tubes and the like, and the primary object of the present invention is to provide a closure of this kind which is extremely simple and durable in construction, efficient in operation, and otherwise well adapted to meet with all of the requirements for a successful commercial use.

A more specific object of the present invention is to provide a closure of the above kind including a sliding closure member which may be readily manipulated by one hand, and which may be opened without being detached from the tube and possibly becoming lost.

A still further object of the invention is to provide a closure of the above kind in which means is provided to tightly seat the sliding closure member when moved to closing position so that evaporation of moisture from the contents of the collapsible tube will be effectively prevented even though a quite long time may elapse before the contents of the collapsible tube are completely exhausted.

The invention consists in the novel form, combination and arrangement of parts hereinafter more fully described, shown in the accompanying drawing, and claimed.

In the drawing:

Figure 1 is a fragmentary side elevational view of a collapsible tube provided with a closure constructed in accordance with the present invention.

Figure 2 is an elevational view looking toward the left of Figure 1.

Figure 3 is a top plan view of the device shown in Figure 1.

Figure 4 is a section on line 4—4 of Figure 1; and

Figure 5 is a perspective view of the sliding closure member.

Referring in detail to the drawing, 5 indicates an ordinary collapsible tube provided at one end with a circular head 6 that may be tapered in the usual manner and which is provided with a centrally located discharge orifice or passage 7.

Formed integral with the head 6 is a guide 8, two opposite sides of which are parallel and are formed with transversely extending elongated grooves 9 that terminate adjacent but short of the ends of guide 8 as clearly shown in Figures 1 and 3. The top of guide 8 is perfectly flat and disposed at right angles to the sides of said guide and the longitudinal axis of the collapsible tube 5. Also, the discharge passage or orifice 7 extends through the guide 8 and is adapted to be closed by a closure member 10 slidably mounted on said guide.

The closure member 10 is formed from sheet metal of substantially U-shape in cross section to provide an intermediate portion 11 flatly engaging the top of guide 8 and depending side portions 12 flatly engaging the sides of guide 8 and formed with elongated inwardly pressed ribs 13 slidably engaging in the grooves 9 of guide 8 to slidably connect the closure member 10 to said guide. The relative lengths of the ribs 13 and grooves 9 is such that movement of closure member 10 is limited in opposite directions to positions wherein the orifice 7 is completely covered by the intermediate portion 11 of the closure member, or wherein said orifice is completely uncovered to permit unrestricted discharge of the contents of the callapsible tube 5 when desired. At the same time, the opening and closing of the tube does not necessitate detachment of the closure member 10 from the tube, so that danger of the closure member becoming lost is not presented. By terminating the grooves 9 inwardly of the ends of guide 8, the ends of ribs 13 cooperate with the ends of said grooves 9 to properly limit the movement of the sliding closure member 10 without the necessity of separate movement-limiting means. As the closure member 10 is formed of resilient sheet metal, it may readily be snapped onto the guide 8 in a downward direction, the depending side members 12 yielding in a direction away from each other to permit this application of the sliding closure member to the guide. Of course, when the sliding closure member 10 reaches its applied position, the side portions 12 will spring toward each other under their own tension so as to cause the ribs 13 to enter the grooves 9 and thereby insure retention of the sliding closure member upon the guide, while permitting its limited movement to open or closed positon as mentioned above.

The side portions 12 of the sliding closure member may be connected to the intermediate portion 11 thereof by upwardly directed yieldable connecting portions 14, and the grooves 9 in the guide 8 may be inclined inwardly and downwardly relative to the upper surface or top wall of guide 8 so that the closure member 10 will be drawn downwardly into tight seating engagement with the top of guide 8 when the closure member 12 is slid inwardly to its orifice-closing position. Downward pull exerted on the side portions 12 by the inclined nature of grooves 9 will cause the intermediate portion 11 to tightly seat on the top of guide 8 so that evaporation of moisture

from the contents of tube 5 will be effectively prevented when the closure member 10 is in closed position. The yieldable portions 14 prevent distortion of the closure member when the downward pull is exerted on the side portions 12 by the inclined arrangement of grooves 9 at the time that the closure member 10 is slid to its closed position. It will be understood that the inclined positions of the grooves 9 simply tend to more tightly seat the intermediate portion 11 of the closure member when the latter is moved to closed position, said portion 11 being at all times engaged with the top of guide 8.

Provided on the outer end of the intermediate portion 11 is an upwardly and inwardly turned coil or lug 15 which may be conveniently engaged by the thumb for shifting the closure member 10 to either open or closed position. In this way, actuation of member 10 may be readily effected by the use of one hand.

From the foregoing description, it will be seen that I have provided a closure structure which is of extremely simple and inexpensive form, which is extremely compact and durable, and which is extremely efficient in use. Minor changes in the specific details of construction illustrated and described may be resorted to, such as fairly fall within the scope of the invention as claimed.

What I claim as new is:

In combination, a collapsible tube having a neck provided with an opening and an integral guide extending from the opening and provided with parallel sides and a flat top at right angles to the sides and the longitudinal axis of the tube, said sides of the guide having elongated external grooves therein terminating inwardly of the ends of the guide, and a U-shaped sheet metal closure having a flat intermediate portion seated on the top of said guide and side portions slidably engaging the sides of the guide, said side portions being provided with inwardly pressed elongated ribs engaged in said grooves of the guide to slidably connect the closure to the guide and limit movement of said closure relative to the same, said grooves in the sides of the guide being slightly inclined inwardly and downwardly to cause tight seating of the closure on the top of the guide when slid to position for closing the opening of the neck, said closure having upwardly yielding depending portions connecting the intermediate portion of the closure with the side portions thereof to effect tight seating of the closure without distortion thereof.

FRED J. GEACH.