No. 776,893. PATENTED DEC. 6, 1904.

A. B. DAVIS.

COIN OPERATED VENDING MACHINE.

APPLICATION FILED JUNE 8, 1903.

NO MODEL. 3 SHEETS—SHEET 1.

Fig. 1.

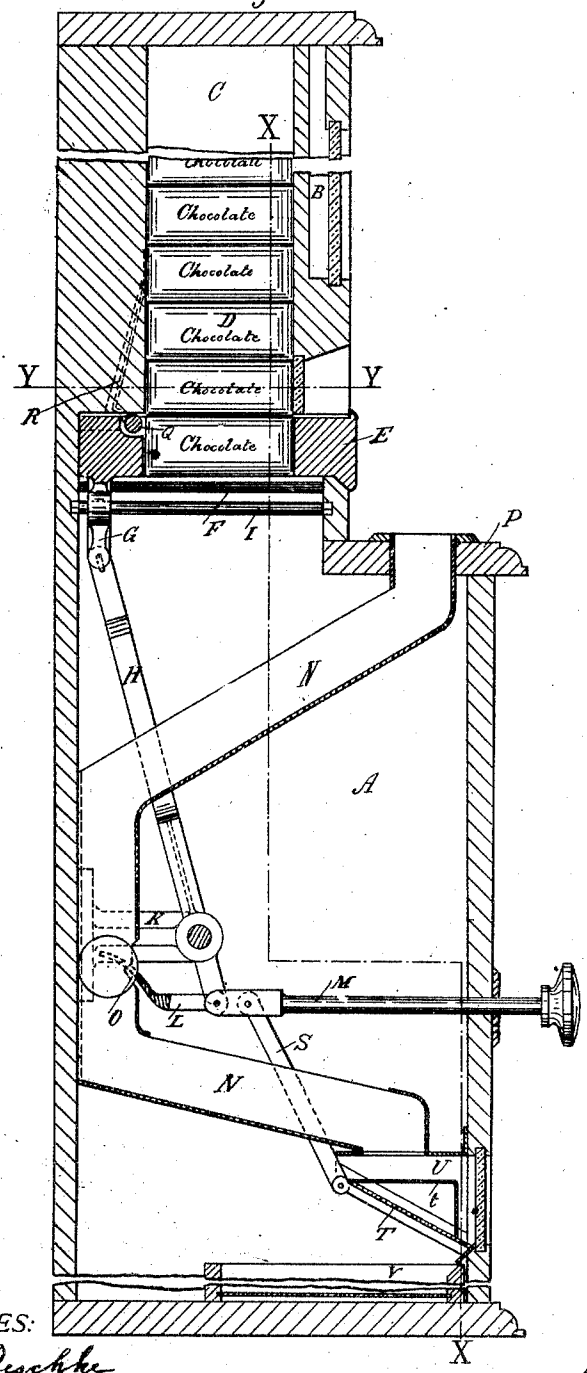

WITNESSES:
Max Peschke
Elfrieda Behrens

INVENTOR
Alvah B. Davis,
BY Emil Behrens
Attorney

No. 776,893. PATENTED DEC. 6, 1904.

A. B. DAVIS.

COIN OPERATED VENDING MACHINE.

APPLICATION FILED JUNE 8, 1903.

NO MODEL. 3 SHEETS—SHEET 2.

Fig. 5.

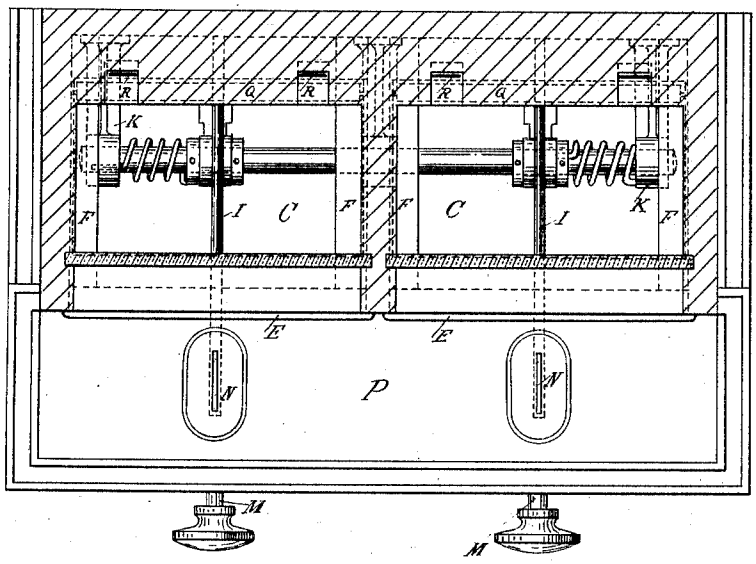

Fig. 2.

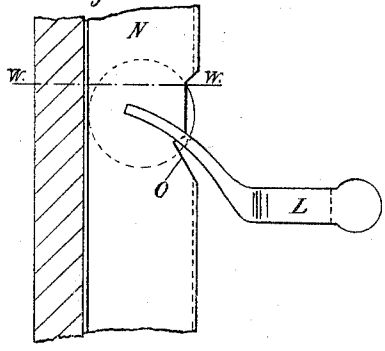

Fig. 3.

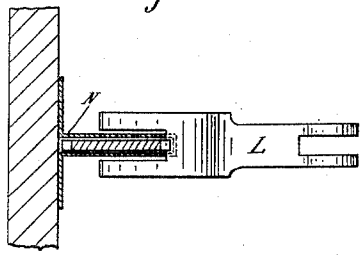

WITNESSES:
Max Peschke
Elfrieda Behrens

INVENTOR
Alvah B. Davis.
BY Emil Behrens
Attorney

PHOTO LITHOGRAPHED BY SACHETT & WILHELMS LITHO. & PTG. CO. NEW YORK.

No. 776,893. PATENTED DEC. 6, 1904.

A. B. DAVIS.

COIN OPERATED VENDING MACHINE.

APPLICATION FILED JUNE 8, 1903.

NO MODEL. 3 SHEETS—SHEET 3.

Fig. 4.

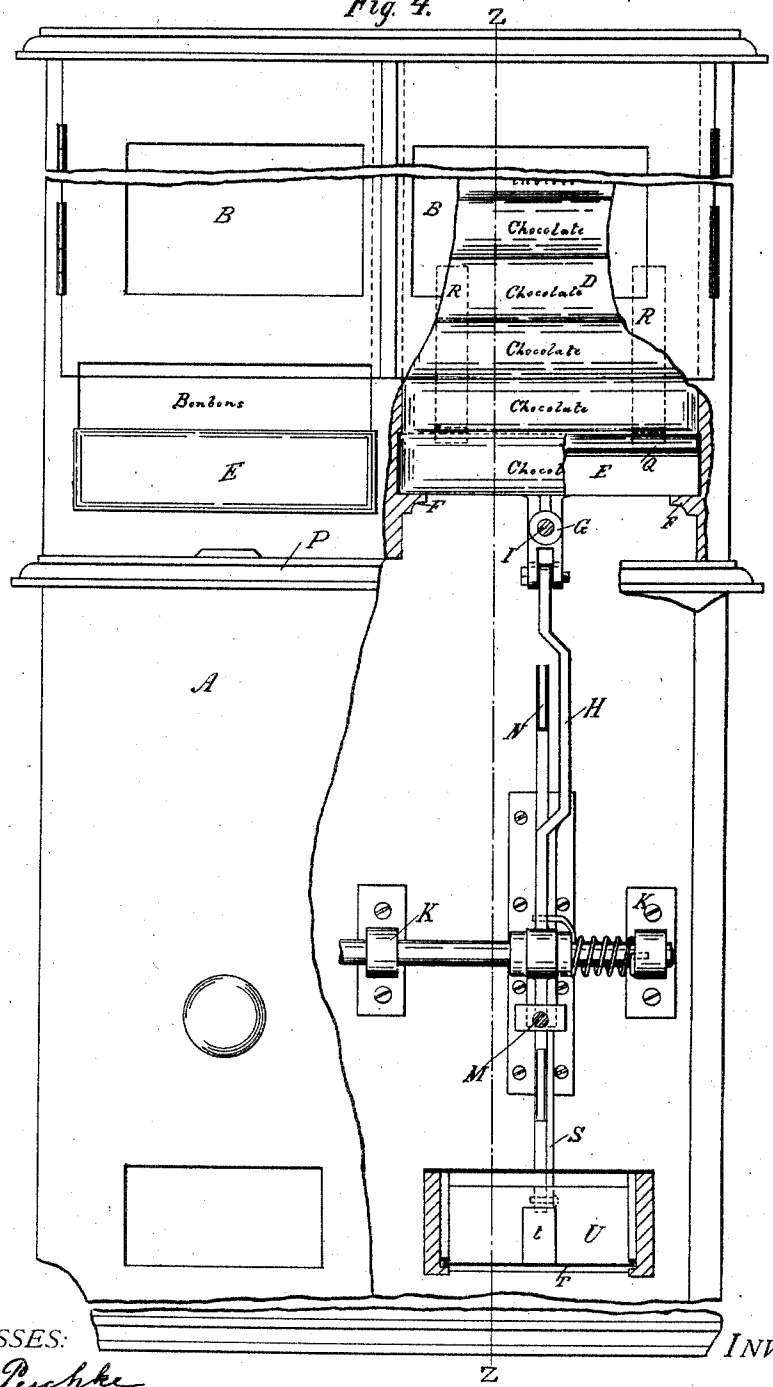

WITNESSES:

Max Peschke

Elfrieda Behrens

INVENTOR

Alvah B. Davis,

BY Emil Behrens

Attorney

PHOTO-LITHOGRAPHED BY SACHETT & WILHELMS LITHO. & PTG. CO. NEW YORK.

No. 776,893. Patented December 6, 1904.

UNITED STATES PATENT OFFICE.

ALVAH B. DAVIS, OF SAN ANTONIO, TEXAS.

COIN-OPERATED VENDING-MACHINE.

SPECIFICATION forming part of Letters Patent No. 776,893, dated December 6, 1904.

Application filed June 8, 1903. Serial No. 160,583. (No model.)

To all whom it may concern:

Be it known that I, ALVAH B. DAVIS, a citizen of the United States of America, and a resident of San Antonio, in the county of Bexar and State of Texas, have invented certain new and useful Improvements in Coin-Operated Vending-Machines, of which the following is a specification.

My invention relates to improvements in coin-operated vending-machines for articles to be sold in cartons and in which the coin rests against a fork at a point where the tube has in its front a vertical opening and a notch. The fork is connected with the push-button and with the lever of the drawer, so when the fork is pressed against the coin it is lifted by the edge of the coin and pushes the drawer to the outside, at the same time allowing the coin to pass. When the button is pressed without inserting a coin in the tube, the fork will be pressed into the notch of the tube, whereby the drawer is locked.

The object of my invention is to furnish a simple device of a coin-operated vending-machine of non-liability to get out of order. I attain this object by the mechanism illustrated in the accompanying drawings, in which—

Figure 1 is a vertical section on line Z Z of Fig. 4. Fig. 2 is an enlarged part of the coin-tube, showing the coin resting on the fork. Fig. 3 is a sectional top view on line W W of Fig. 2. Fig. 4 is a front elevation of the entire double machine, part of the front taken off to show the inside, on a section on line X X of Fig. 1; and Fig. 5 is a sectional top view on line Y Y of Fig. 1.

Similar letters refer to similar parts throughout the several views.

A is a double vending-machine box which represents in its upper part a show-case B for exhibiting the articles which are packed up in cartons and are sold in their respective compartments of the machine.

C is the compartment of the vending-machine to receive the cartons D.

E represents drawers without bottom which rest and slide on two horizontal guides F. They at the same time prevent the cartons from falling through the drawers. A guide-bracket G is fastened with one end to the bottom of the back of the drawer and with the other end hinged to the upper arm of a lever H. Through the center of the bracket G goes a guide-rod I, which is fastened on its ends to the box A. The lever H pivots in brackets K, which are fastened to the back of the box A, with the lower arm hinged to a fork L as well as to pushing-rod M. This fork L passes with its tines over the coin-tube N, at which point the tube has in its front a vertical opening with a notch O, as illustrated in Figs. 3 and 4, and rests with its shank on the lower part of the notch, so when the fork is pressed against the tube the shank of the fork goes into the notch, which prevents the fork from being lifted and also the moving of lever H and drawer E to the outside.

When a coin is dropped into the tube, the coin will go so far down the tube till it is stopped by the shank of the fork, and when the fork is pressed against the tube the visible edge of the coin will not allow the fork to go into the notch O, but will lift the fork and allow therewith the lower arm of the lever H to come near the tube, whereby the upper arm of lever H moves the drawer E to the outside and allows the contents, or the carton D, of the drawer E to drop on the table P of the vending-machine.

The drawer E carries in the upper part of its back a roller Q, which allows the drawer to be easily moved under the pressure of the cartons on top of the carton in the drawer, and to prevent the upper cartons from sliding down in the rear when the drawer moves to the front a pair of spring-arms R are located in a recess in the back board of the compartment C, and as the drawer moves to the front the spring-arms R will follow the roller Q and hold up the upper cartons. Another lever, S, is hinged with its upper end to the pushing-rod M and with its lower end to a slot T, which slides in grooves on a slant plane and is the bottom of a box U. This box is fastened to the front board of the vending-machine, where a glass is inserted to expose to the sight the contents of the box, and in the top of the box terminates the coin-tube, so the box will receive all coins passing through the tube.

When the pushing-rod is pressed, the lever S will raise the bottom slat T and let drop the contents of the box U in the money-drawer V, at the same time closing the mouth of the coin-tube with the angle-strip *t*, and when the pushing-rod is released the coin in the tube will drop into the box U, to be exposed to the sight until the next operation, this detecting any bogus coin put in the vending-machine.

Having fully described my invention, what I do claim as my invention, and desire to secure by Letters Patent, is—

1. In a vending apparatus, the combination with a casing, of a lever fulcrumed intermediate its length within said casing, a push-rod connecting to said lever near the lower end thereof, a package-discharge member secured near the opposite end of said lever, cushioning means for retaining said discharge member in its normal position, a fork pivotally secured to said push-rod and lever, and means for preventing movement of said fork and subsequently of said lever.

2. In a device of the character described, the combination with a casing, of a coin-tube having a notch positioned within said casing, a bracket secured within said casing, a lever fulcrumed intermediate its length upon said bracket, a push-rod movably connected to said lever near the lower end thereof, a fork pivotally connected to the lower end of said lever and normally in engagement with the notched portion of said coin-tube for preventing movement of said lever, and carton-engaging means movably secured to the opposite end of said lever.

Signed at San Antonio, Texas, this 25th day of May, 1903.

ALVAH B. DAVIS.

Witnesses:
EMIL BEHRENS,
W. C. WEST.