Jan. 15, 1935. D. S. BARROWS 1,988,427

CUSHIONING MECHANISM

Filed Oct. 4, 1933 4 Sheets-Sheet 1

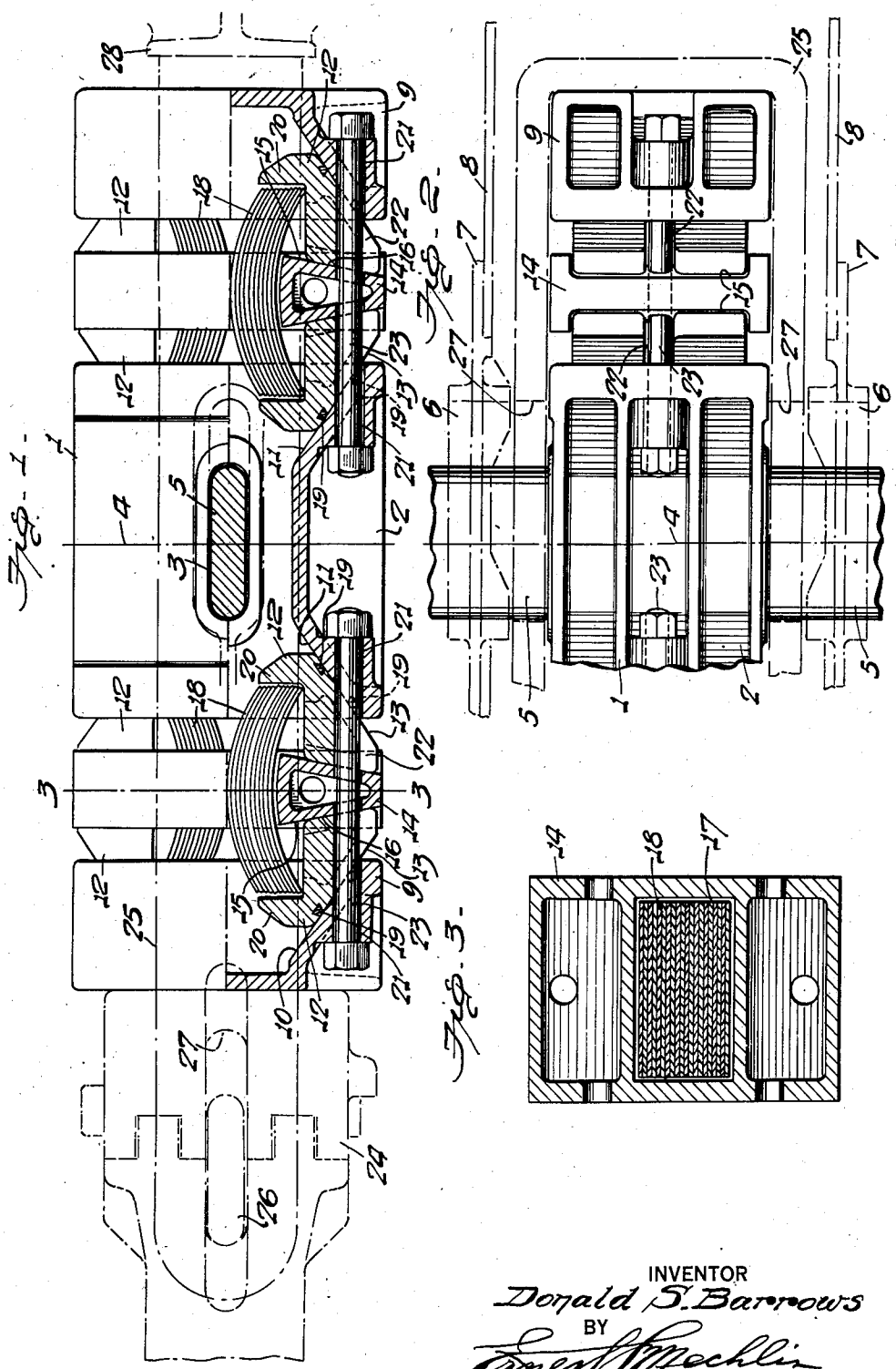

INVENTOR
Donald S. Barrows
BY
Ernest S. Mechlin
ATTORNEY

Jan. 15, 1935. D. S. BARROWS 1,988,427

CUSHIONING MECHANISM

Filed Oct. 4, 1933 4 Sheets-Sheet 2

Fig. 4.

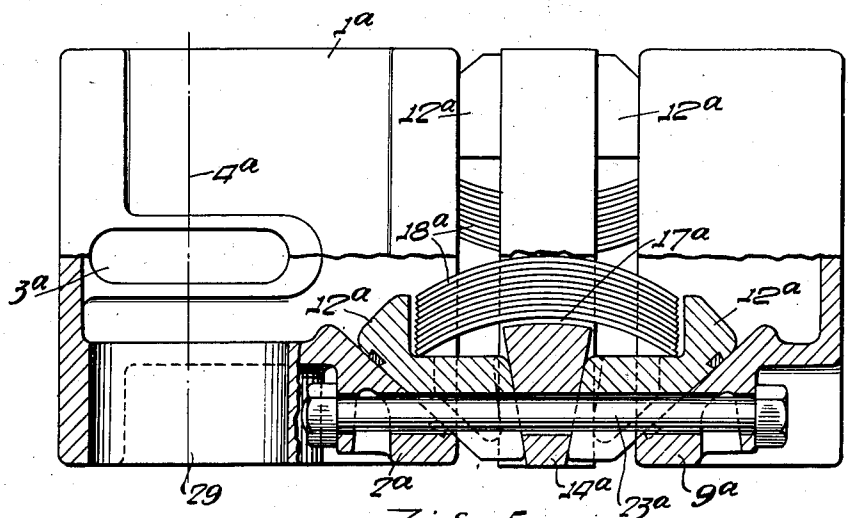

Fig. 5.

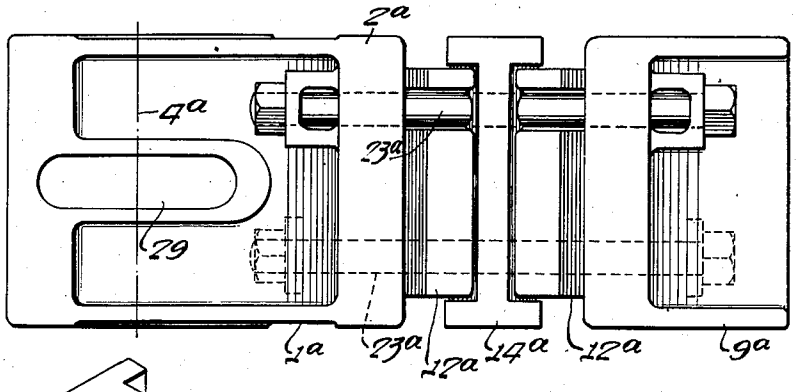

Fig. 6.

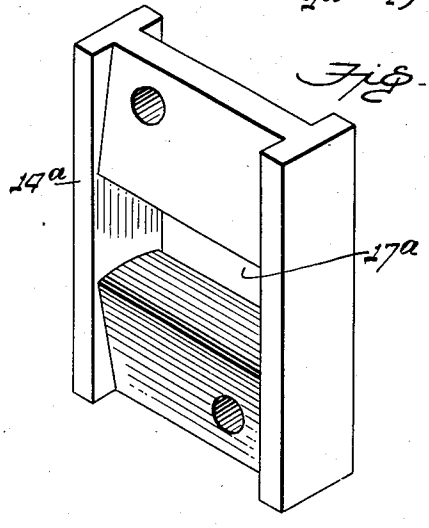

Fig. 7.

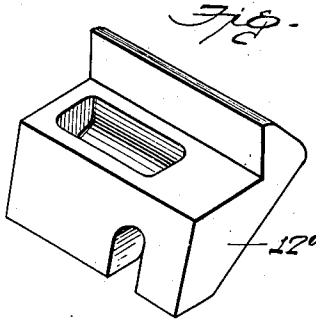

INVENTOR
Donald S. Barrows
BY
Charles J. Pfeckler
ATTORNEY

Jan. 15, 1935. D. S. BARROWS 1,988,427

CUSHIONING MECHANISM

Filed Oct. 4, 1933 4 Sheets-Sheet 3

Fig. 9.

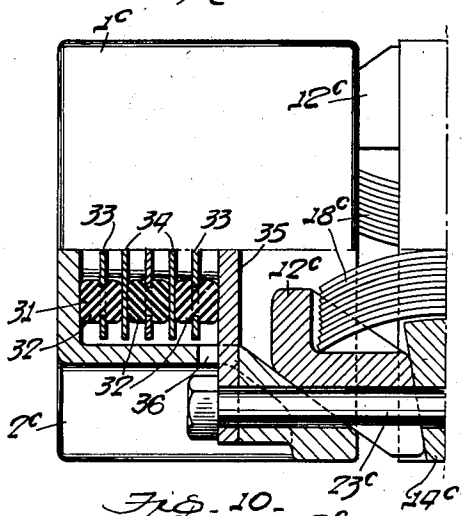

Fig. 11.

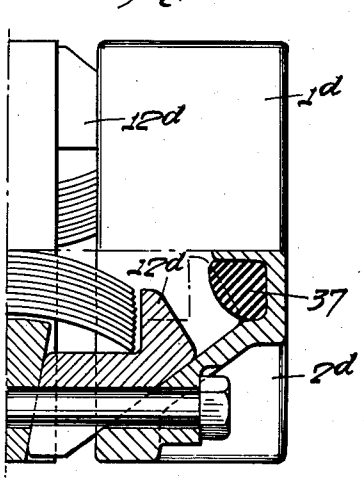

Fig. 10.

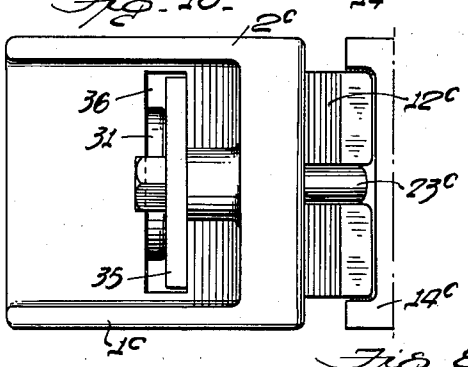

Fig. 12.

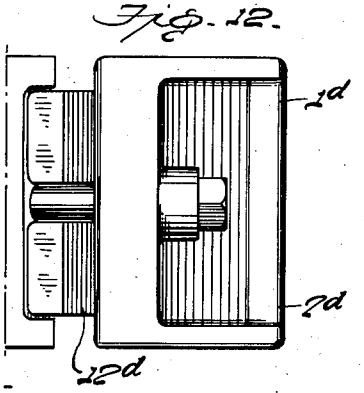

Fig. 8.

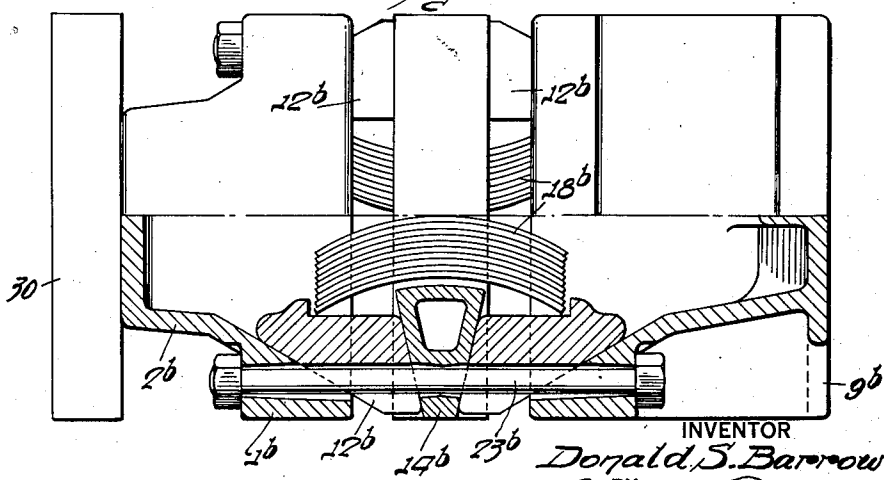

INVENTOR
Donald S. Barrows
BY
Ernest J. Mechlin
ATTORNEY

Jan. 15, 1935. D. S. BARROWS 1,988,427

CUSHIONING MECHANISM

Filed Oct. 4, 1933 4 Sheets-Sheet 4

Fig. 13.

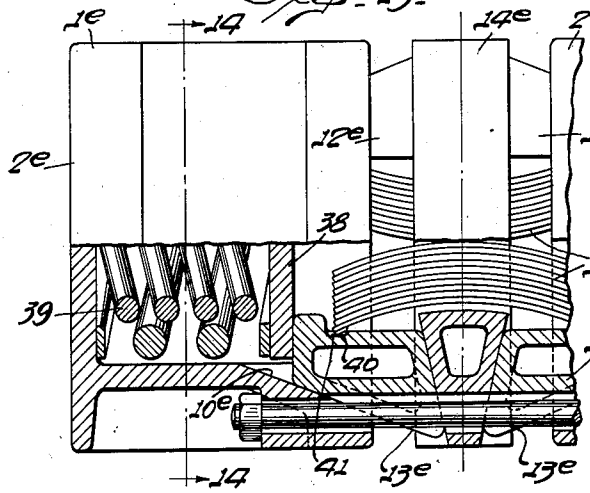

Fig. 14.

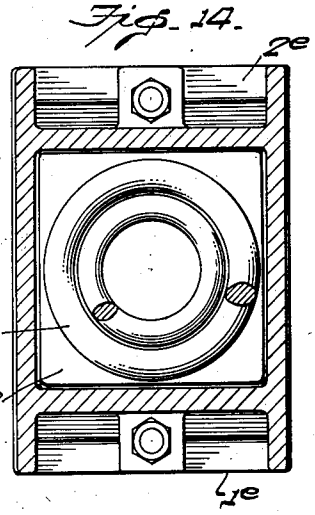

Fig. 15.

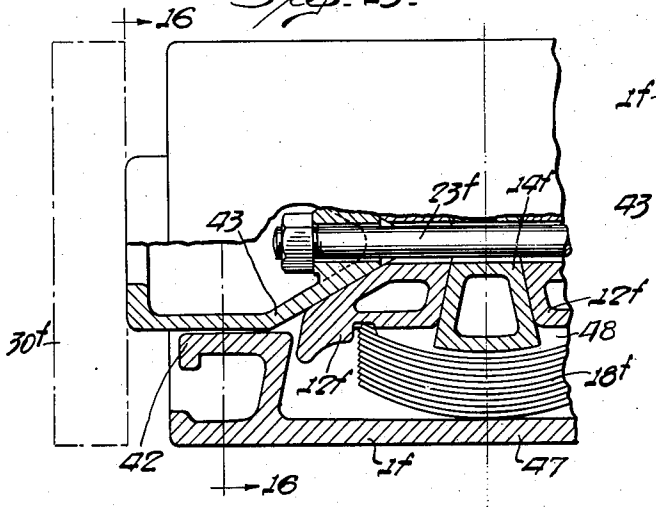

Fig. 16.

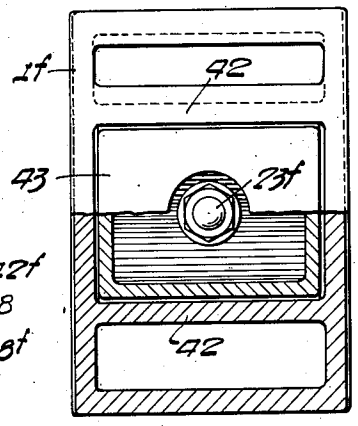

Fig. 17.

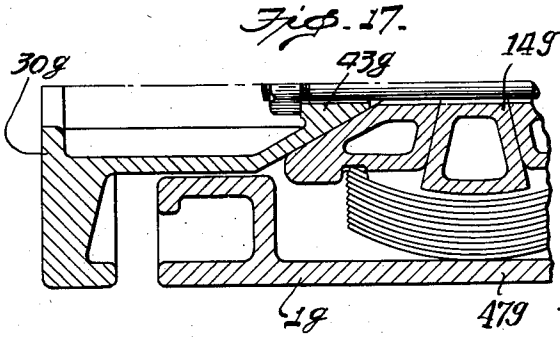

INVENTOR
Donald S. Barrows
BY
Ernest J. Mechlin
ATTORNEY

Patented Jan. 15, 1935 1,988,427

UNITED STATES PATENT OFFICE

1,988,427

CUSHIONING MECHANISM

Donald S. Barrows, Rochester, N. Y., assignor to The Symington Company, New York, N. Y., a corporation of Maryland

Application October 4, 1933, Serial No. 692,189

9 Claims. (Cl. 213—7)

This invention relates to cushioning mechanism and its arrangement with railway draft rigging, whereby a greater shock absorbing capacity and coupler movement may be provided upon buffing movement of an associated drawbar than upon draft movement thereof.

The principal object of my invention, generally considered, is to provide cushioning mechanism comprising a pair of friction members each formed with corresponding inclined friction surfaces, a pair of wedges with corresponding friction surfaces engaging each member, an element disposed between the wedges of the respective members, and curved plate springs with opposite end portions respectively acting on the wedges on opposite sides of the element to hold them in engagement with the inclined surfaces of the friction members.

Another object of my invention is the provision of cushioning mechanism involving a body portion formed with outwardly diverging surfaces at both ends, said body portion being slotted to receive a stop member passing therethrough for holding it against forward movement, a follower at each end of said body portion formed with corresponding outwardly diverging friction surfaces, wedges with corresponding friction surfaces engaging the friction surfaces on the body portion and followers, a diamond-shaped element at each end of the mechanism disposed between the wedges for the body portion and those for the followers, with the engaged surfaces on the wedges inclined to correspond with the surfaces of the element, and curved plate springs associated with said diamond-shaped elements and with their ends acting on the wedges at opposite sides of said elements.

A further object of my invention is the provision of cushioning mechanism such as described in the preceding paragraphs in which release springs may be employed to increase the capacity of the mechanism and make it unnecessary to have the engaging surfaces between the wedges and the associated elements at a self-releasing angle.

Other objects and advantages of the invention relating to the particular arrangement and construction of the various parts will become apparent as the description proceeds.

Referring to the drawings illustrating my invention:—

Figure 1 is a partial side elevational view and partial vertical longitudinal sectional view of one form of my cushioning mechanism shown assembled with associated draft rigging, portions of the associated cheek plates and backstop being diagrammatically illustrated.

Figure 2 is a fragmentary plan of the mechanism shown in Figure 1, portions of the sills and associated cheek plates being diagrammatically illustrated.

Figure 3 is a transverse sectional view on the line 3—3 of Figure 1.

Figure 4 is a partial side elevational view and partial vertical longitudinal sectional view of another embodiment of my cushioning mechanism.

Figure 5 is a plan of the mechanism shown in Figure 4.

Figure 6 is a perspective view of the diamond-shaped or friction element with laterally converging friction surfaces shown detached from the associated parts.

Figure 7 is a perspective view of one of the wedges shown separated from the associated parts.

Figure 8 is a view corresponding to Figure 4, but showing another embodiment of my invention.

Figure 9 is a view corresponding to Figure 8, but showing only one half of a modified form of my invention.

Figure 10 is a plan of the gear shown in Figure 9.

Figures 11 and 12 are views corresponding, respectively, to Figures 9 and 10, but showing a further embodiment of my invention.

Figure 13 is a view corresponding to Figure 8, but showing only somewhat more than half of a still further embodiment of my invention.

Figure 14 is a transverse sectional view on the line 14—14 of Figure 13, looking in the direction of the arrows.

Figure 15 is a view corresponding to Figure 13, but showing an additional embodiment of my invention.

Figure 16 is a transverse sectional view on the line 16—16 of Figure 15, looking in the direction of the arrows.

Figure 17 is a fragmentary sectional view corresponding with Figure 15, but showing a modification.

Referring to the drawings in detail, like parts being designated by like reference characters, and first considering the embodiment of my invention illustrated in Figures 1, 2 and 3, there is shown an embodiment of my invention comprising a double-ended series friction draft gear or cushioning device 1 comprising a main friction member or body 2 provided with a normally hori-

zontal slot 3 for receiving a draft key or other stop means 5 which extends through slots 6 in cheek plates 7 connected to associated draft sills 8, and holds the friction member 2 against movement under the action of draft forces, while permitting rearward movement thereof under the action of buffing forces. This is on account of the slots 6 being extended rearwardly of the normal position of the key 5. However, it will be understood that I do not wish to be limited to this use of the mechanism disclosed.

The double-ended or selective travel mechanism of the present embodiment further comprises two relatively short bell-mouthed end housings or followers 9 provided with inclined friction surfaces 10 corresponding with the inclined friction surfaces 11 on the body or main friction member 2. In each mouth of the end members 9 and the oppositely opening mouths of the main or body member 2 are two wedges 12 which, in the present embodiment, have friction surfaces 13 corresponding with the friction surfaces 10 and 11, all of which surfaces are made to a self-releasing or relatively large angle, thereby avoiding the necessity of coil or other direct release springs.

Between the pairs of wedges 12 in the mouths of the main and end friction elements are disposed intermediate elements 14, generally or approximately diamond-shaped in section, or provided with outwardly converging inclined friction surfaces 15, the engaged portions of the wedges 12 being correspondingly inclined, as indicated at 16. Each diamond-shaped element 14 has a preferably rectangular longitudinally extending aperture 17 in its middle, in which are received double group of typical curved plate springs placed back to back, as indicated at 18. The two wedges of each pair are expanded by engagement of the free ends of the central double spring groups 18.

On account of the inclination of the friction surfaces 15 on the diamond-shaped elements 14, there is a differential action, and the wedges move into their associated housing portions distances greater than the corresponding movements of said portions with respect to said diamond-shaped elements, the extra wedge movements being caused by the angles of the diamond-shaped elements 14. This angle, as shown, is preferably made so that the total supplemental wedge travel of the wedges on opposite sides of a given diamond-shaped member 14 is equal to the increase in projected length of the springs 18 when approximately flattened under full gear closure. It is not necessary that the angle of the intermediate or diamond-shaped members should be thus chosen, as the primary purpose is to cause supplemental wedge travel and develop more frictional work than could be obtained if the travel were limited to that of the gear. However the incidental advantage of selecting the angle, as described, is valuable because it avoids gouging or chiselling of the wedges from relative movement of the ends of the springs with respect thereto. In order to avoid scoring and prevent sticking between the wedges and engaged friction surfaces, lead inserts 19 are desirably provided on the wedge surfaces and corresponding surfaces on the housing portions. The inner ends of the wedges are desirably formed with flanges or end pieces 20 which extend toward the longitudinal center line of the gear. In order to hold the parts of the mechanism assembled even when separated from the associated rigging, longitudinal apertures 21 are provided in the housing portions 2 and 9 and the diamond-shaped elements 14, and corresponding notches or slots 22 are formed in the wedges 12 to receive longitudinally extending bolts, or other retaining means, 23 which limit longitudinal separation between the parts while allowing the desired compression and avoiding interference with the movement of the wedges 12 in compressing the associated springs 18.

One way of utilizing the cushioning mechanism disclosed is to connect it to an associated coupler 24 through a horizontal yoke 25 connected to said coupler as by means of a horizontal front draft key 26. It will, of course, be understood that the yoke 25 is slotted, as indicated at 27, to receive not only the key 26, but also the key 5.

From the foregoing disclosure, it will be seen that under the action of draft forces, the main friction member 2 is held stationary by the key 5, and the coupler 24 pulls the yoke 25 forwardly through the connecting key 26, moving the rear follower or housing member 9 and associated wedges 12 and diamond-shaped member rearwardly of the key 5, so that said wedges advance in the respective housing portions and effect straightening of the rear springs 18 and closure of the rear portion only of the mechanism, the forward portion being uncompressed on account of the body or main housing portion 2 being held stationary by the key 5.

Under the action of buffing forces, however, the butt of the coupler 24 engages the front follower casing 9, pushing it and all of the wedges into their respective housing portions, straightening all of the curved plate springs, and effecting compression of the entire mechanism, the rear portion of the yoke and associated rear follower portion 9 being held stationary by abutment against a backstop 28. On account of this action under buff, not only is an increased energy absorbing capacity provided, but a coupler travel is permitted equal to the sum of the travels permitted by the movement of the elements forwardly and rearwardly of the connecting key 5. Although for convenience and economy of manufacture the gear is desirably made symmetrical, about the central transverse plane 4, so that the travel and capacity provided by each end is substantially identical, yet this is not essential in accordance with the broad aspect of my invention.

Referring now to the embodiment of my invention illustrated in Figures 4, 5, 6 and 7, a cushioning mechanism or gear 1^a is disclosed involving two bell-mounted members 2^a and 9^a opening toward one another. In each mouth are two wedges 12^a, and between the two pairs of wedges is an intermediate friction element 14^a generally diamond-shaped in section and, as in the previous embodiment, having an aperture 17^a extending longitudinally of the gear and receiving curved plate springs 18^a. As in the preceding embodiment, retaining means or bolts 23^a are provided for holding the parts of the gear assembled. It will, therefore, be seen that the gear of the present embodiment, as so far described, corresponds with half of the mechanism of the gear of the first embodiment. It may be converted into a selective travel gear like that of the first embodiment, but adapted for use with either horizontal selective travel yokes, as previously disclosed, or corresponding vertical yokes, by making the gear symmetrical about the transverse plane 4^a, that is, with the parts at the left of

said plane, as viewed in Figs. 4 and 5, corresponding to those at the right.

In order to avoid the necessity of a separate slotted front follower, the member 2^a of the gear 1^a is extended longitudinally and provided with a normally horizontal slot 3^a and a normally vertical slot 29, the retaining means 23^a being offset from the vertical central plane, as indicated most clearly in Figures 5, 6 and 7, in order to clear the slotted portions of the member 2^a, while not unduly increasing the length of that member. Although I have shown both slots 3^a and 29, it will be understood that only one slot is used at a time, and that a given gear may be provided with only one or the other of said slots, or both, as desired. If provided with both slots, a universal gear is formed which can be used with four A. R. A. draft lugs, with the regular Farlow attachments without a follower block, for example, in short overhang special cars, or by correspondingly lengthening the backstop in cars with normal overhang, with the horizontal swiveling yoke in combination with regular cheek plates and A. R. A. rear draft lugs, or with any standard vertical yoke in combination with standard rear draft lugs and Farlow cheek plates. In other words, by having the slots extend both ways transversely through the gear, of either the single or selective travel type, it is possible to use it with its long transverse dimension disposed either vertically or horizontally, as will be understood. Except as specifically described in connection with the present embodiment, the same may correspond substantially with that of Figures 1 to 3, inclusive.

Referring now to the embodiment of my invention illustrated in Figure 8, a construction is there disclosed which corresponds substantially with that of Figures 4 to 7, inclusive, except that the gear 1^b comprises non-interchangeable bell-mouthed housings 2^b and 9^b, and is desirably employed with a follower 30 engaging the housing portion 2^b, as illustrated. Inasmuch as there are no slots in either of the end members, the retaining bolts 23^b which hold the members 2^b and 9^b assembled with the wedges 12^b, the central or diamond-shaped member 14^b, and the springs 18^b need not be offset from the longitudinal central plane.

Referring now to the embodiment of my invention illustrated in Figures 9 and 10, a construction is there disclosed which corresponds generally with that of Figure 8, except that the hollow end portions or housing members 2^c of the gear 1^c receive resilient means 31 comprising annular rubber elements 32 mounted on preferably steel disks 33, and each element separated from the adjacent element by a preferably steel plate 34. Intermediate followers 35 desirably engage the rubber elements 31 nearest the wedges 12^c, which followers are engaged for compressing the rubber elements upon a predetermined movement of said wedges in compressing the associated springs 18^c which are received in a longitudinal aperture in the central or diamond-shaped member 14^c. It will, therefore, be seen that the rubber elements are only compressed upon a predetermined compression of the main springs of the mechanism. The intermediate followers 35 are desirably held by the same retaining bolts 23^c as the other elements and allowed a predetermined limited movement by the clearances 36.

Referring now to the embodiment of my invention illustrated in Figures 11 and 12, a construction is there disclosed which corresponds with that of Figures 9 and 10, except that a single rubber cushion 37, in each end housing member 2^d of the gear 1^d, is substituted for the series of rubber elements of the preceding embodiment. As in said preceding embodiment, the rubber cushions 37 are engaged only upon predetermined compressive movement of the gear, or until the wedges 12^d move into engagement with said cushions, as indicated in dot-dash lines. Except as specifically described in connection with the present movement, the same may correspond generally with that of the preceding embodiment.

Referring now to the embodiment of my invention illustrated in Figures 13 and 14, a construction is there disclosed corresponding generally with that of Figure 8, except that the angle of the friction surfaces 10^e on the bell-mouthed housing elements 2^e of the gear 1^e is smaller, or what might be termed non-releasing, as compared with the angle of the friction surfaces 10 of the first embodiment. The angle of the friction surfaces 13^e of the wedges 12^e is, of course, made to correspond and in order to make the gear so that it will release, intermediate followers 38, only one of which is illustrated, are employed and are normally held in engagement with the ends of the wedges 12^e in the housing portions 2^e by resilient release means 39, which, in the present embodiment, are double helical or coil springs. The elements of the stacks of curved plate springs 18^e, received in the central or diamond-shaped friction element 14^e, are each desirably formed with a nib or corrugation 40 at each end, pressed out or embossed in the edges thereof, causing said plates to interlock with one another and with the wedges 12^e, by having the nibs of the outermost springs received in pockets 41 in said wedges, thereby preventing undesired lateral movement between the leaves of the springs and between the stack of leaves and the wedges, in a manner as more fully disclosed in the Suckow Patent No. 1,884,913 of October 25, 1932. Except as specifically described in connection with the present embodiment, the same may correspond generally with that of Figure 8, except that interchangeable end housing members 2^e are used.

Referring now to the embodiment of my invention illustrated in Figures 15 and 16, a construction is there disclosed in which the housing 47 of the gear 1^f receives wedges 12^f disposed on opposite sides of what might be referred to as an inverted diamond-shaped or central element 14^f, curved plate springs 18^f acting between the walls 48 of the housing 47 and the wedges 12^f, the ends of said springs respectively engaging the wedges on opposite sides of the central member 14^f, which although shown as separately formed, may if desired be cast integral with the housing 47, as illustrated in Fig. 17. Central wedges or wedge spreaders 43 are employed, one between the pair of wedges at each end of the gear, said spreader wedges 43 being preferably held from undesired withdrawal with respect to the gear by a through bolt or other retaining device 23^f. In the present embodiment, a follower 30^f is employed at each end of the gear 1^f for acting on the central wedges 43. The end openings of the housing 47 are desirably restricted, as indicated at 42, to provide for guiding the central or spreader wedges 43, as will be understood. It will, therefore, be seen that the gear of the present embodiment might be called the "inverted" or "wrong side out" form of the "diamond" gear disclosed in the preceding

embodiments. The center plungers being guided in the restricted openings in the one-piece housing, avoid any tendency of the wedges at one end of the gear to shift laterally with respect to those at the other end upon compression of the mechanism.

Referring now to the embodiment of my invention illustrated in Figure 17, a construction is there disclosed which corresponds with that of Figures 15 and 16, except that the plungers or center wedges 43^g are formed integral with, or have integral follower portions 30^g, and the central member 14^g is shown integral with the housing 47^g, but may be separately formed as illustrated in Fig. 15. The gear 1^g may be otherwise identical with the gear 1^f.

From the foregoing description taken in connection with the accompanying drawings, it will be apparent that I have devised a form of cushioning mechanism which may be double-ended, or single-ended, for giving a selective travel effect with a greater capacity upon compression in one direction than in the other, or for utilizing the entire mechanism under both draft and buff. Although preferred embodiments of my invention have been illustrated, it will be understood that I do not wish to be limited to the details shown, as modifications will undoubtedly occur to those skilled in the art within the spirit and scope of the appended claims.

I claim:—

1. In railway draft rigging, in combination with sills providing a freely open draft gear pocket, mechanism forming a double-ended draft gear and comprising a body portion formed with outwardly diverging friction surfaces at both ends, a stop member passing through said body portion for holding it against forward movement, a follower at each end formed with corresponding outwardly diverging friction surfaces, wedges with corresponding friction surfaces engaging the friction surfaces on the body portion and followers, an element approximately diamond-shaped in section at each end of the gear, formed with an aperture extending longitudinally of said gear, disposed between and frictionally engaging the wedges for the body portion and those for the followers, the engaged surfaces on the wedges being inclined to correspond with the surfaces of the elements, curved plate springs received in the apertures of said diamond-shaped elements and acting on the wedges on opposite sides of each element, a yoke embracing said mechanism, a backstop adapted to engage the rear end of said yoke for limiting rearward movement of said mechanism, a coupler adapted to engage the forward portion of said mechanism, and means connecting said coupler and yoke.

2. Cushioning mechanism comprising a body portion formed with outwardly diverging friction surfaces at both ends, a follower at each end formed with corresponding outwardly diverging friction surfaces, wedges with corresponding friction surfaces engaging the friction surfaces on the body portion and followers, an element disposed between the wedges at each end of the gear formed with an aperture extending longitudinally of said gear and disposed between and frictionally engaging the wedges for the body portion and those for the followers, the engaged surfaces on the wedges being inclined to correspond with the surfaces of the elements, and curved plate springs received in the apertures of said elements and acting on the wedges on opposite sides of each element.

3. Cushioning mechanism comprising a pair of friction members each formed with corresponding inclined friction surfaces extending toward one another, a pair of wedges with corresponding friction surfaces engaging the friction surfaces of each member, an element disposed between the wedges of the respective members, said element having inclined friction surfaces converging laterally in both directions with respect to the longitudinal center line, said wedges having corresponding friction surfaces engaging said converging surfaces, and curved plate springs with opposite end portions respectively acting on the wedges on opposite sides of said element.

4. Cushioning mechanism comprising a pair of friction members each formed with corresponding inclined friction surfaces extending toward one another, a pair of wedges with corresponding friction surfaces engaging the friction surfaces of each member, an element disposed between the wedges of the respective members, said element having inclined friction surfaces converging laterally in both directions with respect to the longitudinal center line, said wedges having corresponding friction surfaces engaging said converging surfaces, said element being formed with an aperture extending longitudinally of the mechanism, curved plate springs received in said aperture and acting on the wedges on opposite sides of said element, and means for maintaining said members, wedges and element in assembled relation.

5. Cushioning mechanism comprising a pair of friction members each formed with corresponding inclined friction surfaces extending toward one another, a pair of wedges with corresponding friction surfaces engaging the friction surfaces of each member, an element disposed between the wedges of the respective members, said element having inclined friction surfaces converging laterally in both directions with respect to the longitudinal center line, said wedges having corresponding friction surfaces engaging said converging surfaces, curved plate springs with opposite end portions respectively acting on the wedges on opposite sides of said element, and retaining means extending longitudinally and intersecting said friction members, element and wedges for holding the parts of the mechanism assembled with respect to one another.

6. Cushioning mechanism comprising a pair of friction members each formed with corresponding inclined friction surfaces, a pair of wedges with corresponding friction surfaces engaging the friction surfaces of each member, an element disposed between the wedges of the respective members, said element having inclined friction surfaces converging laterally in both directions with respect to the longitudinal center line, said wedges having corresponding friction surfaces engaging said converging surfaces, and curved plate springs with opposite end portions respectively acting on the wedges on opposite sides of said element, one of said friction members being longitudinally elongated as compared with the other and formed with slots extending at right angles to and intersecting one another to adapt said gear, to receive a connecting draft key, when disposed with its greater tranverse dimension either horizontal or vertical.

7. Cushioning mechanism comprising a pair of friction members each formed with corresponding inclined friction surfaces, a pair of wedges with corresponding friction surfaces engaging

the friction surfaces of each member, an element disposed between the wedges of the respective members, said element having friction surfaces extending generally transversely with respect to the longitudinal center line, said wedges having corresponding friction surfaces engaging said friction surfaces on said element, curved plate springs with end portions acting on the wedges on opposite sides of said element, and resilient means acting longitudinally on the outer end portions of said wedges for effecting release of the mechanism.

8. Cushioning mechanism comprising a pair of friction members each formed with corresponding inclined friction surfaces extending toward one another, a pair of wedges with corresponding friction surfaces engaging the friction surfaces of each member, an element disposed between the wedges of the respective members, said element having friction surfaces inclined with respect to one another laterally from the longitudinal axis of the mechanism in both directions, said wedges having friction surfaces correspondingly inclined and engaging said friction surfaces on the element, curved plate springs with opposite end portions respectively acting on the wedges on opposite sides of said element, and resilient rubber cushioning means in the outer end portions of said friction members and engaged by said wedges upon predetermined movement thereof for increasing the capacity of the mechanism and facilitating release.

9. Cushioning mechanism comprising housing means, two pairs of wedges disposed in said housing means, an element disposed between the pairs of wedges, said element having friction surfaces converging laterally in both directions with respect to the longitudinal center line, said wedges having corresponding friction surfaces engaging said converging surfaces, said wedges having additional friction surfaces laterally converging at a different angle than the first-mentioned friction surfaces, means at the ends of said housing means and acting on said last-mentioned converging friction surfaces, and curved plate springs with opposite end portions respectively acting on the wedges on opposite sides of said element.

DONALD S. BARROWS.