W. C. BRENNER.

RAIL BOND PUNCH.

APPLICATION FILED MAR. 29, 1919.

1,343,901. Patented June 22, 1920

FIG. 1.

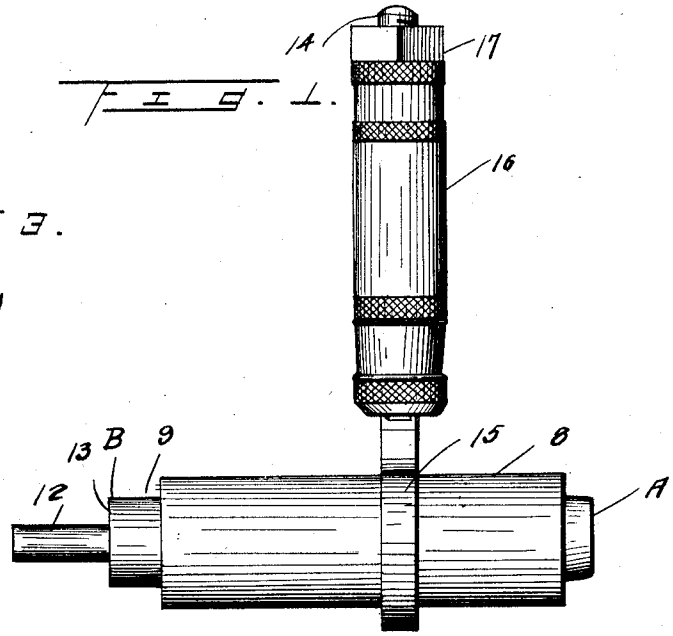


FIG. 3.

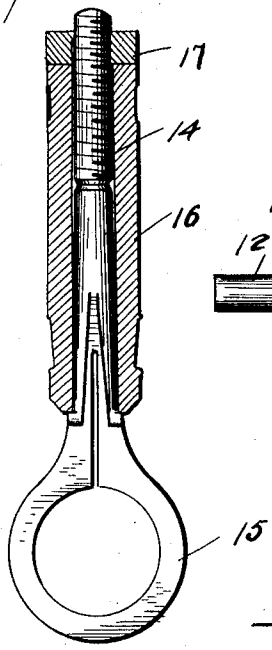


FIG. 2.

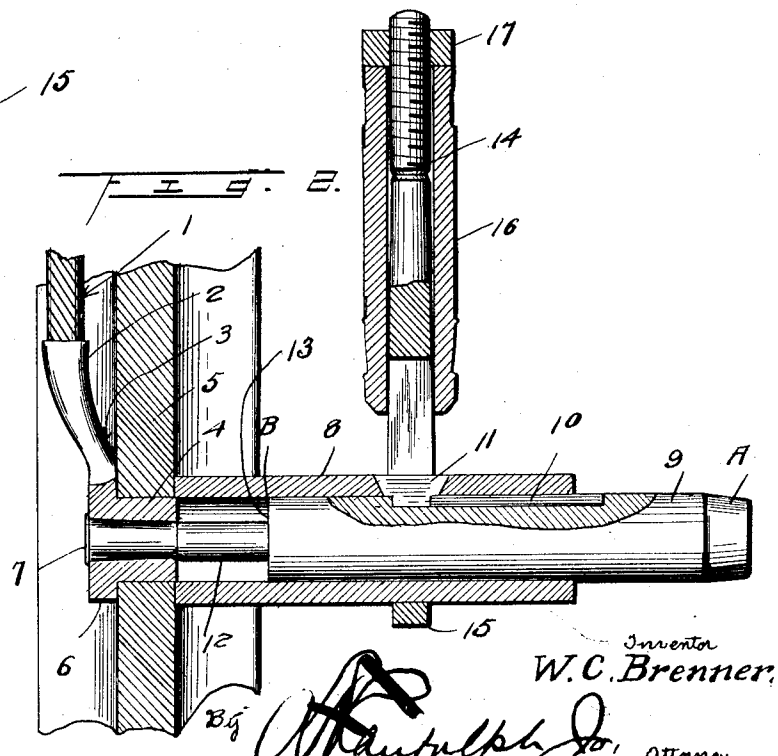


Inventor

W. C. Brenner.

By Randolph & Co., Attorneys.

# UNITED STATES PATENT OFFICE.

WILLIAM C. BRENNER, OF TUMWATER, WASHINGTON, ASSIGNOR OF ONE-HALF TO ROBERT CLAYTON, OF OLYMPIA, WASHINGTON.

## RAIL-BOND PUNCH.

1,343,901. Specification of Letters Patent. Patented June 22, 1920.

Application filed March 29, 1919. Serial No. 286,199.

*To all whom it may concern:*

Be it known that I, WILLIAM C. BRENNER, a citizen of the United States, residing at Tumwater, in the county of Thurston and State of Washington, have invented certain new and useful Improvements in Rail-Bond Punches; and I do hereby declare the following to be a full, clear, and exact description of the invention, such as will enable others skilled in the art to which it appertains to make and use the same.

This invention relates to improvements in punches and has for one of its objects the provision of a device of this character, especially adaptable for removing or detaching the terminals of bonds from railway rails and such devices without injuring or mutilating the terminals so that the same can be again used.

Another object of this invention is the provision of a body adapted to receive one end of the body portion of the terminal and has movably mounted therein a plunger so constructed that upon driving the same, it will first remove or drive out the plug or wedge in the terminal body and then engage and drive out the body of the terminal from its resting place in the rail or such device to which the bond is applied.

A further object of this invention is the provision of a plunger of the above stated character, which shall be simple, durable and efficient, and which may be manufactured and sold at a comparatively low cost.

With these and other objects in view as will become more apparent as the description proceeds, the invention consists in certain novel features of construction, combination, and arrangement of parts as will be hereinafter more fully described and claimed.

For a complete understanding of my invention, reference is to be had to the following description, and accompanying drawings, in which:—

Figure 1 is a front elevation of a punch constructed in accordance with my invention,

Fig. 2 is a sectional view of the same illustrating it applied to the terminal of the bond,

Fig. 3 is a sectional view illustrating the means of securing the handle to the body of the punch.

Referring in detail to the drawing, the numeral 1 indicates a bond including a plurality of twisted wires forming a conductor and which have their ends shrunk into hollow extensions 2 of bond terminals 3. The bond terminals 3 each consists of a cylindrical body 4 constructed preferably from copper so as to establish an electrical connection with a railroad rail or such device 5 when applied thereto. The cylindrical body 4 has each end open and is provided with an annular flange 6 at one end to limit the movement of the body through the opening of a rail or such device 5 and on which is formed the extension 2. The cylindrical body 4 is adapted to receive a wedge shaped member or plug 7 so that upon driving the same within the body, said body will be expanded against the wall of the opening of the rail or such device, thus firmly securing the terminal to the rail or such device.

The foregoing description relates to a well known construction of terminal used upon a bond and the manner of applying the same to an object and which is adapted to have my invention used thereon.

A cylindrical member or body 8 has each end fully open and slidably receives a plunger 9. The plunger 9 is of a greater length than the body so that both ends of the plunger may protrude from the body at one time. The plunger 9 is provided with an elongated slot 10 receiving a key 11 located within an opening formed within the body or cylindrical member 8 so that the plunger is limited in its movement in either direction, thus preventing the danger of the plunger from becoming detached from the body or member 8. The end A of the plunger 9 is adapted to form a striking face for a hammer or like tool while the end B is reduced to form an extension 12 of such a size that it will pass through the body 4 of the terminal 3 and during the use of the tool is adapted to drive the wedge 7 out of the body 4 of the terminal 3. The extension 12 forms an angular shoulder 13 on the end B of the plunger, which shoulder is adapted to abut the end of the body 4 of the terminal 3 when the wedge 7 has been driven or partially driven out of the body 4 of the terminal so that upon further driving action of the plunger 9, the body 4 of the terminal 3 will be driven out of the opening of the rail or such device 5, thus removing the terminal from the object to which it is ap-

plied without mutilating the body portion of the terminal, thus permitting the use of the same at another time.

A rod 14 has formed upon one end a circular collar 15 adapted to surround the body 8 of the punch and overlie the key 11 for retaining the same in the opening of the body 8 and also the slot 10 of the plunger 9. The point of formation of the collar 15 with the bolt 14 is split so as to permit the collar 15 to expand and retract when desiring to remove and replace the bolt 14 on the body 8. A suitable handle 16 surrounds the bolt 14 and is retained thereon by a nut 17 threaded to the outer end of the handle providing an efficient grip whereby the tool can be held in its proper position in one hand of a person allowing the other hand free to manipulate a hammer or set tool for driving the wedge 7 and body 4 of the terminal 3 out of the opening of the rail or such device.

While I have shown and described the preferred embodiment of my invention, it will be understood that minor changes in construction, combination, and arrangement of parts may be made without departing from the spirit and scope of the invention as claimed

Having thus described my invention, what I claim is:—

1. A punch comprising a body, a plunger slidable in said body and having a slot, a key carried by said body and disposed within said slot for limiting the movement of the plunger, a reduced extension formed upon one end of said plunger and adapted to engage the wedge of the terminal of a bond, said extension adapted to define an angular shoulder for engagement with one end of the body of the terminal of the bond, and a handle for said body.

2. A punch comprising a body, a plunger movably mounted in said body, means for limiting the movement of the plunger in either direction, an extension formed on one end of said plunger, a collar surrounding said body and retaining said means in proper position within the body, and a handle secured to said collar.

3. A punch comprising a body, a plunger movably mounted in said body, and having a slot therein, said body having an opening therein, a key disposed in the opening and slot, a collar surrounding the body and overlying the key, a rod formed on said collar, and a handle removably secured to the rod.

4. A punch comprising a tubular body adapted to have one end disposed against a rail supporting a bond, a handle secured to the body and extending at right angles thereto, a plunger slidable in the body and of a length greater than that of said body, and means on one end of said plunger for driving the wedge out of the bond.

In testimony whereof I affix my signature in presence of two witnesses.

WILLIAM C. BRENNER.

Witnesses:

WALTER CROSBY,

J. L. JOHNS.