Oct. 8, 1946. A. FRIEDMAN 2,408,840

REMOVABLE SHOULDER PAD

Filed Oct. 7, 1944

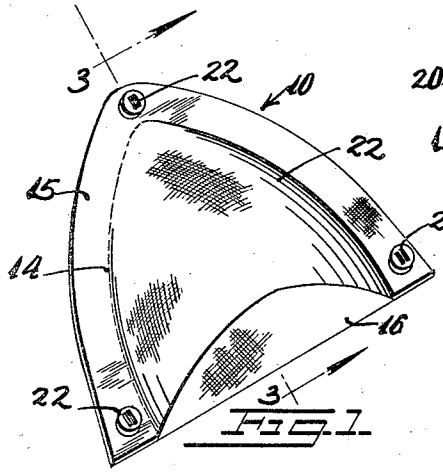

FIG. 1.

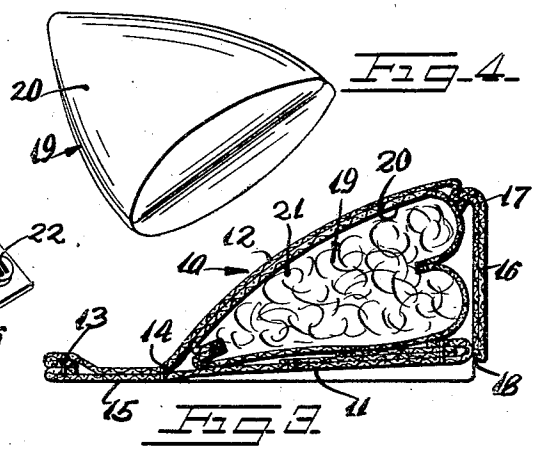

FIG. 3.

FIG. 4.

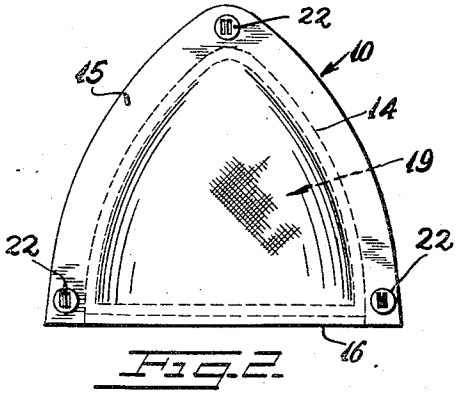

FIG. 2.

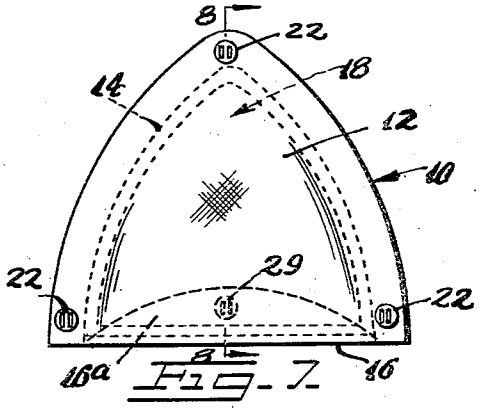

FIG. 7.

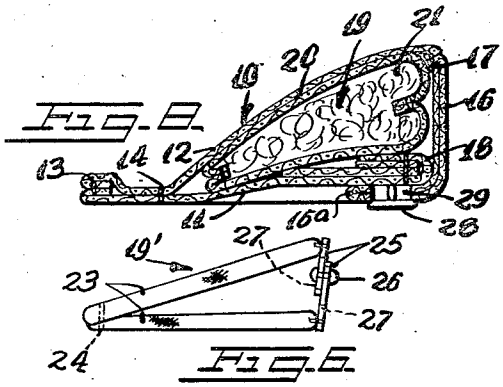

FIG. 8.

FIG. 6.

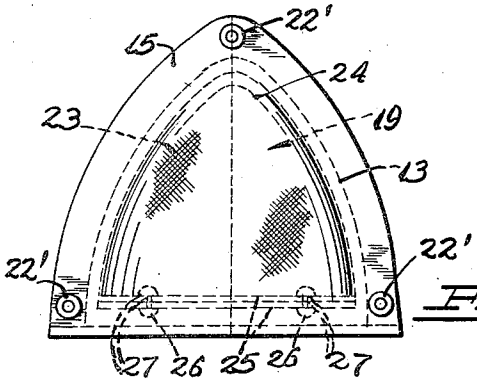

FIG. 5.

INVENTOR.
Abraham Friedman
BY
Zoltan A. Polachek
ATTORNEY

Patented Oct. 8, 1946

2,408,840

UNITED STATES PATENT OFFICE

2,408,840

REMOVABLE SHOULDER PAD

Abraham Friedman, New York, N. Y.

Application October 7, 1944, Serial No. 557,603

1 Claim. (Cl. 2—268)

1

This invention relates to new and useful improvements in a removable shoulder pad.

More specifically, the invention proposes the construction of a removable shoulder pad of any desired shape or size which may be removably mounted in a dress, coat or other similar garment to shape and form the shoulder parts of the garment.

Still further, it is proposed to characterize the removable shoulder pad by a pocket-like casing having a projecting flange portion provided with fastening elements adapted to be engaged with complementary fastener elements in the shoulder portion of the garment to removably mount the casing in position.

Still another object of the invention proposes characterizing the fastener elements by complementary buttons and buttonholes or snap fastener elements.

Still another object of the invention proposes providing the pocket-like casing with a mouth into which a pad filler is adapted to be inserted for imparting bulk to the shoulder pad.

Still another object of the invention proposes constructing the shoulder pad in such a manner that the pad filler may be removed from the interior of the casing permitting the casing to be cleaned or laundered independently of the pad filler.

Still another object of the invention proposes constructing the pad filler of separable pad sections which are adapted to be adjusted to give the appearance of more or less bulk material within the pocket-like casing.

Another object of this invention, in a modified form thereof, proposes the provision of a means for releasably closing the mouth opening of the pocket-like casing to prevent the accidental discharge of the pad from the casing.

It is a further object of this invention to construct a removable shoulder pad which is simple and durable and which can be manufactured and sold at a reasonable cost.

For further comprehension of the invention, and of the objects and advantages thereof, reference will be had to the following description and accompanying drawing, and to the appended claim in which the various novel features of the invention are more particularly set forth.

In the accompanying drawing forming a material part of this disclosure:

Fig. 1 is a perspective view of a shoulder pad constructed in accordance with this invention.

Fig. 2 is a plan view of Fig. 1.

2

Fig. 3 is a vertical sectional view of the shoulder pad taken on the line 3—3 of Fig. 1.

Fig. 4 is a perspective view of the pad filler, per se.

Fig. 5 is a plan view similar to Fig. 2 but illustrating a modification of the invention.

Fig. 6 is a side elevational view of the pad filler, per se, as constructed for use in the modification of the invention shown in Fig. 5.

Fig. 7 is another view similar to Fig. 2 but illustrating a still further modification of the invention.

Fig. 8 is a vertical sectional view taken on the line 8—8 of Fig. 7.

The removable shoulder pad, according to this invention, includes a pocket-like casing 10 formed of a base wall 11 and a top wall 12. These walls 11 and 12 are stitched together along their edges at the sides of one end by a line of stitches 13. A second line of stitches 14 is extended along the side and same end of the walls 11 and 12 dividing off a flange 15.

The free end of the top wall 12 is secured to a vertical end wall 16. This end wall 16 is secured in position by means of a line of stitches 17 and has its free edge depended downwards to meet the free end of the base wall 12 and form a mouth opening 18 leading to the interior of the casing.

The removable filler pad 19 is adapted to be inserted into the casing 10 through the mouth opening 18. The pad filler 19 consists of an outer cloth casing 20 having its interior filled with a filler material 21. The pad filler 19 is adapted to be removed through the mouth opening 18, permitting the casing 10 to be cleaned or laundered independently of the pad filler.

Fastening elements are mounted upon the flange 15 for engaging complementary fastening elements on the shoulder portion of a dress, coat or other garment for holding the shoulder pad in position. In this first form of the invention the fastener elements are characterized by buttons 22 mounted at spaced positions upon the flange 15 and engaged with complementary buttonholes on the garment.

In the modification of the invention shown in Figs. 5 and 6 the construction of the removable shoulder pad is similar to that previously described except that the fastener elements on the flange 15 comprise stud snap fastener elements 22' which are adapted to be engaged with complementary socket snap fastener elements mounted on the garment.

The pad filler 19' in this form of the invention is also of a slightly different construction. The

pad filler 19' in this form of the invention comprises separate pad sections 23 which have their adjacent ends securely attached together by means of a line of stitches 24. Means is provided for adjustably connecting together the opposite ends of the pad sections 23 permitting these to be held in various spaced positions to change the thickness of the pad filler 19'.

This adjustable connection comprises adjacent pieces of whale bone having their outer edges securely attached to the ends of the pad sections 23. The adjacent edges of these whale bones 25 are frictionally connected together by means of pins 26. These pins 26 pass through elongated slots 27 in the bones 25 permitting them to be adjusted with relation to each other. The removable mounting of the pad filler within the pocket-like casing 10 permits its removal from the pocket-like casing to permit the pad sections 23 to be adjusted as desired.

In other respects this form of the invention is similar to that previously shown and like reference numerals identify like parts in each of the several views.

In the modified form of the invention disclosed in Figs. 7 and 8 the construction of the shoulder pad is similar to that illustrated in Fig. 1 except for the provision of a means for releasably closing the mouth opening 18 to prevent the accidental discharge of the pad filler 19 therefrom.

In this form of the invention the end wall 16 of the casing 10 is formed with a downwardly projected portion 16a which is bent under to extend along the bottom face of the base wall 11 of the casing 10. This bent under portion 16a is provided with a buttonhole 28 engageable with

a complementary button 29 mounted on the base wall 11. When the button 29 is engaged with the buttonhole 28 as shown in Fig. 8 the mouth opening 18 will be closed and the pad 19 will be retained in position therein. It is possible to disengage the button 29 from the buttonhole 28 to free the mouth opening 18 to permit the removal of the pad 19 when desired.

In other respects this form of the invention is similar to that previously shown and like reference numerals identify like parts in each of the several views.

While I have illustrated and described the preferred embodiments of my invention, it is to be understood that I do not limit myself to the precise constructions herein disclosed and the right is reserved to all changes and modifications coming within the scope of the invention as defined in the appended claim.

Having thus described my invention, what I claim as new, and desire to secure by United States Letters Patent is:

A removable shoulder pad, comprising a pocket-like casing having a flange portion extending along the sides at one end and at the other end having a vertical end wall meeting the base wall of said casing forming a mouth for said casing, a pad filler within said casing and engaging said vertical end wall and removable through said mouth, and releasable fastening elements mounted on said flange for engaging complementary fastening elements formed on a garment for holding the shoulder pad in position, said pad filler comprising an outer casing, and filler material within said casing.

ABRAHAM FRIEDMAN.