April 4, 1950 H. A. CONSOR 2,502,641

SUCTION CLEANER

Filed Jan. 11, 1949 2 Sheets-Sheet 1

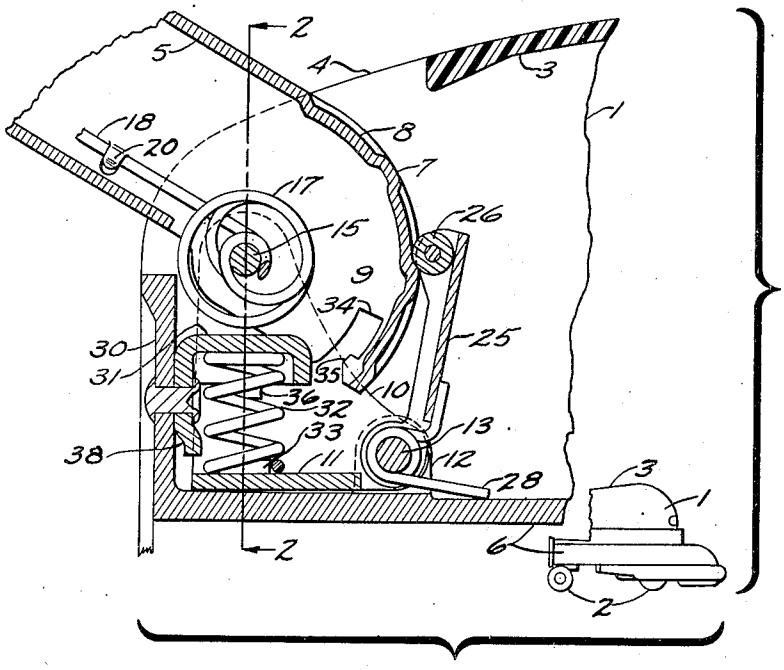

Fig. 1

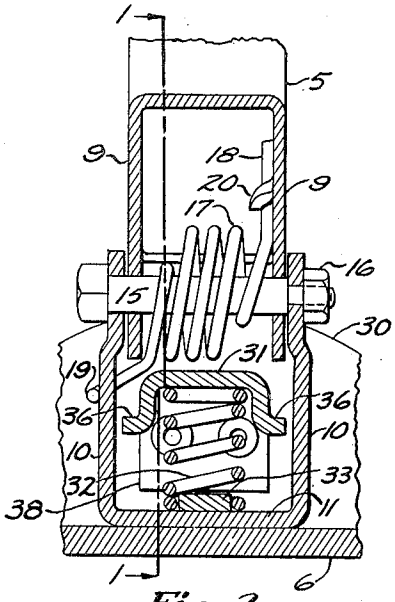

Fig. 2

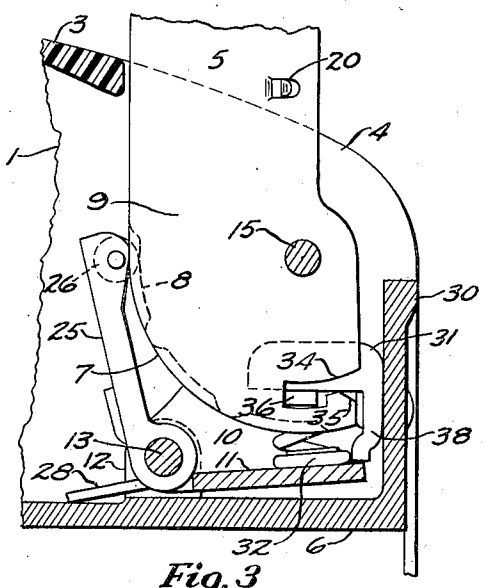

Fig. 3

INVENTOR.
Herbert A. Consor
BY
Harry S. Duvall
ATTORNEY.

April 4, 1950 H. A. CONSOR 2,502,641

SUCTION CLEANER

Filed Jan. 11, 1949 2 Sheets-Sheet 2

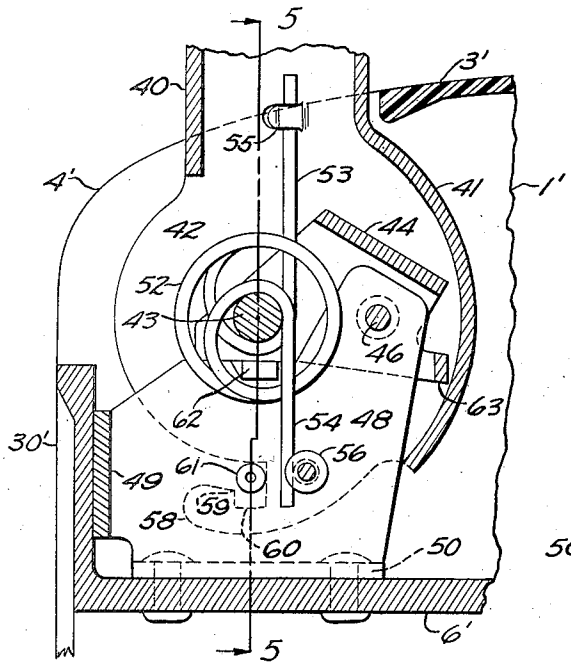

Fig. 4

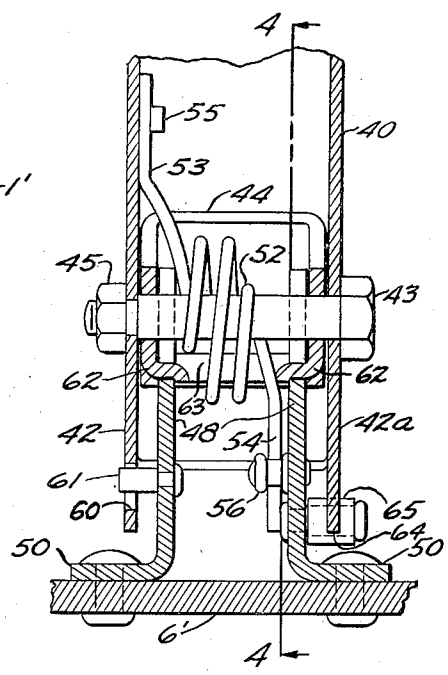

Fig. 5

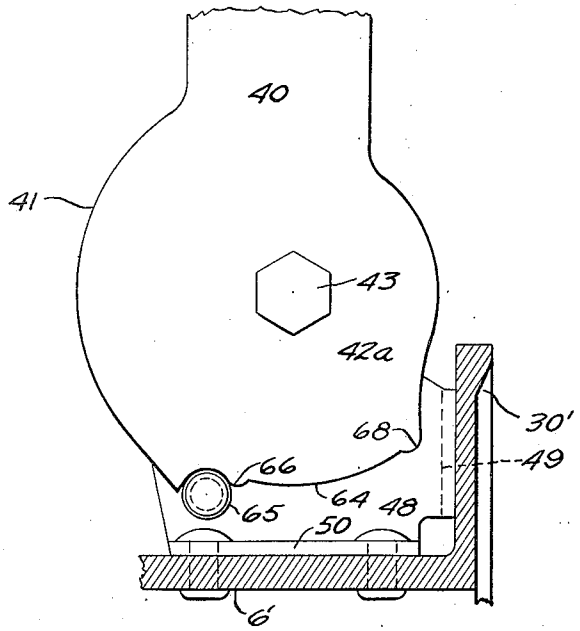

Fig. 6

INVENTOR.
Herbert A. Consor
BY
Harry S. Demarest
ATTORNEY.

Patented Apr. 4, 1950 2,502,641

UNITED STATES PATENT OFFICE

2,502,641

SUCTION CLEANER

Herbert A. Consor, Shaker Heights, Ohio, assignor to The Hoover Company, North Canton, Ohio, a corporation of Ohio

Application January 11, 1949, Serial No. 70,315

14 Claims. (Cl. 306—13)

1

My invention relates to suction cleaning apparatuses and more particularly to a manipulating handle structure therefor which maintains itself in storage position and automatically locks to the cleaner body when the same is lifted by the handle for transporting from place to place.

It is a more particular object of the present invention to provide a handle mounting structure for suction cleaning apparatuses characterized by the provision of means by which the handle is normally freely rotatably mounted with the suction cleaner body in both operating and storage positions thereof but which automatically locks itself to the cleaner body to prevent relative rotation therebetween when a lifting force is applied to the handle while it is in storage position.

It is a further object of the present invention to provide a suction cleaning apparatus having a manipulating handle pivoted thereto through a structure by which the handle pivot is movable relative to the cleaner body through a slight range of movement and which further includes means for normally maintaining the handle pivot in fixed relation to the cleaner body except when a lifting force is applied thereto while the handle is in storage position in which event the forementioned slight range of movement operates to set a lock to prevent relative movement between the handle and the cleaner body.

Other objects and advantages of the invention will become apparent as the description proceeds when taken in connection with the accompanying drawings in which:

Figure 1 illustrates a suction cleaner embodying my invention and showing the handle mount on an enlarged scale in section taken on the line 1—1 of Figure 2 looking in the direction of the arrows;

Figure 2 is a sectional view taken substantially along the line 2—2 of Figure 1 and looking in the direction of the arrows;

Figure 3 is a partial sectional view illustrating the handle mounting mechanism with the handle in storage position;

Figure 4 is a sectional view of a modified handle mounting structure taken along the lines 4—4 of Figure 5;

Figure 5 is a sectional view taken along the lines 5—5 of Figure 4 looking in the direction of the arrows; and

Figure 6 is a side elevational view of the mechanism of Figure 5 looking at the right hand side thereof.

Referring now to the drawing in detail and

2

first to Figure 1 thereof the apparatus comprises an ambulatory type suction cleaner 1 which includes the usual suction creating means, suction nozzle and carpet agitating or sweeping devices. The cleaner is carried by supporting wheels 2. The rear end of the cleaner structure 1 is shown on an enlarged scale. The cleaner structure 1 includes a motor housing and cover structure 3 provided with a slot 4 in its rear portion which receives one end of a manipulating handle 5. The cover 3 is suitably secured to a frame structure 6 which forms the main body of the cleaning apparatus. The portion of the handle 5 within the space formed between the shell 3 and frame 6 is channel shaped as shown most clearly in Figure 2. The lower end of the web of the channel 7 is rounded as shown in Figure 1 and is provided with a plurality of depressed portions 8 for a purpose to be described hereinafter. The legs 9 of the channel are partially rounded as shown in Figure 1 and extend between the upstanding legs 10 of a U-shaped supporting link provided with a bight portion 11 which rests upon the upper face of the main casing 6. The legs 10 of the U-shaped link are pivoted on a spindle 13 carried by a pair of supporting ears 12 secured to the upper face of the supporting frame 6. The side wings 9 of the handle end are pivoted on a bolt 15 which is secured to the legs 10 of the U-shaped pivoting link by a nut 16.

A counterbalancing torsion spring 17 for the handle surrounds the pivot bolt 15 and is provided at its opposite ends with projecting anchoring legs 18 and 19. The anchoring leg 18 of the spring extends upwardly into the handle 5 and is anchored behind an inwardly extending tongue 20. The anchoring leg 19 of the spring is bent around an edge of one of the legs 10 of the U-shaped securing link. In the position shown in Figure 1 the handle lies in an operating range and the torsion spring 17 is under a stress sufficient to counter-balance the major portion, but not quite all, of the weight of the handle so that the operator of the suction cleaning apparatus is supporting only an insignificant handle weight load. As the handle rotates further in a counter-clockwise direction from the position shown in Figure 1 the tension in the spring increases to counteract the increased weight effect of the handle as it approaches a horizontal position. Clockwise rotation of the handle relieves the tension in the spring to compensate for the decrease weight effect of the handle as it approaches the vertical, storage position.

A detent arm 25 is pivotally mounted upon the

pivot pin 13 between the legs 10 of the handle pivoting link. The outer end of the detent link 25 carries a roller 26 engaging the rounded portion 7 of the handle web. A torsion spring 28 is wrapped around the pivot pin 13 and urges the roller detent structure into engagement with the web 7. The force of the spring is such that the handle is freely pivoted as long as the roller 26 is riding within one of the depressions 8 in the web 7, however, when the roller contacts one of the raised portions separating the depressions 8 its force is sufficient to retain the handle in that position until a slight downward or upward force, as the case may be, is applied to the handle by the operator to shift the same into another range of movement as defined by a different one of the depressions 8.

The frame 6 of the cleaning apparatus includes an upstanding rear plate 30 to which a spring retaining cup 31 is riveted. A stiff compression spring 32 is mounted between the cup 31 and the upper face of the web 11 of the U-shaped pivoting link. A pin 33 projects from the face of the web 11 into the interior of the coil spring 32 to prevent shifting thereof.

The force of the spring 32 is such that the web 11 of the pivoting link structure is firmly held against the upper face of the plate 6 during normal use of the cleaner so that the handle acts as if it were pivoted directly to the main body 6 of the cleaner structure without the intervention of the pivoting link structure 10 and 11.

The side wings 9 of the lower portion of the handle structure are provided with notches 34 having narrow entrance mouths and enlarged interior body portions to define locking lugs 35. As shown most clearly in Figures 2 and 3, the sides of the spring retaining cup 31 carry outwardly projecting locking tangs 36 which are positioned to enter the slots 34 when the handle is raised to the vertical storage position shown in Figure 3. As long as the handle merely rests in storage position the lower faces of the tangs 36 are above the upper edges of the locking nuts 35 and there is no inter-engagement therebetween. The handle is held in upright position by its weight, the action of the roller detent 26 and the action of the torsion spring 18. Counter-clockwise movement of the handle, as viewed in Figure 3, is limited by engagement between the tangs 36 and the closed ends of the slots 34. When the handle is in storage position, a straight upward pull will swing the pivoting link structure 10 and 11 through a small arc in a counter-clockwise direction, as viewed in Figure 3, against the bias of the spring 32 which is not strong enough to counter-balance the weight of the cleaner. This pivoting of the link structure brings the locking tangs 36 into the enlarged portions of the slots 34, see Figure 3, in position to be engaged by the locking tongues 35 on the handle structure. Consequently, further upward movement of the handle allows a very slight pivoting of the whole cleaner structure about the handle pivot pin 15 until the lugs 36 engage the locking tongues 35 after which the further relative movement between the handle and cleaner is prevented. The cleaner may now be carried around by the handle at will without permitting the cleaner body to change its position relative thereto, that is, the cleaner body and handle are substantially at right angles to each other and the cleaner body is in position such that the supporting wheels 2 will contact the supporting surface immediately the cleaner is lowered to operative position. As soon as the weight of the cleaner is transferred to its supporting wheels the spring 32 forces the pivoting link structure 10—11 into the position shown in Figure 1 which disengages the locking engagement between the lugs 35 and 36 and the handle may be shifted from vertical storage position to an angular operating position simply by pivoting movement thereof.

The spring retaining cup 31 is provided with a depending abutment 38 which overlies the web 11 of the pivoting link 10—11. If an attempt is made to raise the cleaner by the handle while it is not in storage position the link pivots about the spindle 13 only sufficiently to engage the web 11 and the abutment 38.

The above described construction provides a handle mounting in which the handle may be rotated about its pivot at will by the operator against the resistance of the usual roller detent and counter-balancing spring in all possible positions thereof except when a directly vertical force is applied to the handle when in storage position for lifting the cleaner. When a lifting force is applied to the handle in storage position a slight shifting of the handle pivot structure rigidly rigidly locks the same to the cleaner body to maintain the cleaner and handle in fixed position as long as the body is supported from the handle.

Referring now to Figures 4 to 6, a modification of the invention is illustrated. Since this form of the invention is also applied to a suction cleaner, only the rear portion of the cleaner and handle mounting structure is illustrated. Certain portions of the cleaner structure of Figures 4 to 6 are identical with portions illustrated in Figures 1 to 3 therefore the identical portions of the two modifications are given the same reference character distinguished by the addition of a prime.

The handle body 40 is channel shaped at its lower end portion which is in the space defined by the cleaner body 6' and the cover shell 3'. This portion of the handle body includes a rounded web portion 41 connected to side wings 42. The handle is pivoted on a bolt 43 which is secured to a U-shaped pivoting link 44 by a nut 45. The bolt 43 forms the pivotal axis of the handle during normal operation of the apparatus. The U-shaped pivoting link 44 is pivoted on a spindle 46 carried by the side legs 48 of a U-shaped supporting bracket structure. The U-shaped supporting bracket structure includes a bight or web portion 49 bearing against the inner face of the flange 30' of the cleaner body structure. The side wings 48 of the bracket structure each include outwardly turned seating flanges 50 riveted to the main cleaner body structure 6' to form the connection between the handle structure and the cleaning body.

A counter-balancing torsion spring 52, corresponding generally to the spring 17 of the apparatus in Figure 1, is wrapped about the handle pivot bolt 43 and is provided with projecting anchoring legs 53 and 54. The projecting leg 53 extends into the handle 40 and is anchored behind an out-struck tongue 55. The projecting leg 54 extends substantially vertically downwardly from the pivot pin 43 into the space between the plates 48 of the anchoring bracket structure and engages against a roller 56 rotatably secured to the right hand leg 48, see Figure 5, of the anchoring bracket.

As shown most clearly in Figure 4 the side webs 42 of the handle structure are curved on

an arc concentric with the center of the pivot pin from the bottom side of the handle **40** to a point slightly beyond a straight line forming the longitudinal axis of the handle structure **40** and extending through the center of the pivot **43**. At this point the web **42** is formed with a backwardly projecting arm **58** to define a slot **60** with the spaced edge of the web **42**. The projecting arm **58** is notched inwardly of its end to form a shoulder **59** defining one wall of an interiorly enlarged part of the slot **60**. In the position shown in Figure 4 the closed end of the slot **60** bars further clockwise rotation of the handle about the pivot pin **43** by engaging the fixed pin **61** which is rigidly secured to the left hand leg **48**, see Figure 5, of the mounting bracket structure. The diameter of the pin **61** is such that it will pass over the abutment **59** without engaging the same as the handle is rotated in a counterclockwise direction viewed in Figure 4. This construction permits free rotational movement of the handle from the storage position into the operating range against the bias of the torsion and counterbalancing spring **52**.

The handle pivot link **44** is provided with a strap portion **63** extending across the back thereof and spanning the upstanding legs **48** of the bracket mounting structure. The strap **63** limits its movement of the pivot link **44** in a clockwise direction about the pivot **43** by engaging the forward edges of the legs **48** of the bracket structure when an attempt is made to lift the cleaner by the handle while the handle is not in vertical storage position. Counter-clockwise movement of the pivot link **44**, as viewed in Figure 4, is prevented by a pair of inwardly bent ears **62** on the side legs of the link **44** which overlie and bear on the upper edges of the bracket plates **48**.

The web **42***a* of the handle has an arcuate edge surface **64** which is concentric with the pivot **43**. The surface **64** is closely adjacent but out of contact with a detent roller **65** rotatably mounted on the plate **48** adjacent to the web **42***a*. As shown most clearly in Figure 6 the end of the surface **64** is defined by a shoulder radial to said surface and positioned to bear against the roller **65** to prevent rotation of the handle counter-clockwise, Figure 6, beyond the vertical storage position. A small rounded abutment **66** projects radially of the surface **64** to retain the handle in storage position. The rear end of the surface **64** is defined by a small rounded radially projecting abutment **68** which defines the lower limit of the normal operating range of handle movement. The abutments **66** and **68** are sufficient to retain the handle in the storage or lowest operating positions, respectively, when bearing on the roller **65**. A slight force on the handle is sufficient to ride the abutments **66** and **68** over the roller **65**. When the abutments **66** and **68** ride over the roller **65** the handle pivot rises slightly pivoting the link **44**.

In the normal operation of the device in Figures 4 to 6 the handle is freely pivotable from the vertical storage position to a low operating range in which it is substantially parallel to the frame **6'** of the cleaner against the torsional bias of the counter-balancing spring **52** plus the slight force required to pass the abutments **66** and **68** over the roller **65**.

The pivot link **44** is maintained in engagement with the plates **48** by the weight of the handle, hence upward movement of the handle in a direction to lift the cleaner pivots the handle structure about the pivot links **44** sufficiently to engage the pin **61** in the bottom part of the slot **60**. As further force is applied to the handle to lift the cleaner from the floor the cleaner structure pivots very slightly to engage the abutment **59** and the pin **61** which locks the handle structure to the cleaner body.

The handle is retained in storage position by the torsional bias of the spring **52** and the abutment **66**. When the handle is rotated from storage position the reaction of the spring **52** on the spindle **43** presses the ears **62** on the link **44** into engagement with the plates **48** thus maintaining the handle firmly seated. The spring **52** thus aids in retaining the handle pivot **43** in fixed position in the operation of the cleaner. When the sector abutments **66** and **68** ride over the roller **65** the pivot pin **43** and link **44** rise slightly against the reaction force of the spring **52**. As shown, the reaction of the spring **52** on the pivot bolt **43** is substantially horizontal when the handle is in storage position, however, it is within the invention to shift the position of the roller **56**, counter-clockwise, Figure 4, to shift the spring anchor arm **54** away from the vertical. The foregoing arrangement causes the reaction force of the spring **52** to press the link **44** upon its seat on plates **48** in all positions of the handle, hence a lifting force on the handle to set the lock also tensions spring **52** to a small degree.

While I have illustrated and described the invention in considerable detail, it is to be understood that various changes may be made in the arrangement, proportion and construction of parts without departing from the spirit of the invention or the scope of the appended claims.

I claim:

1. An ambulatory surface treating tool having a manipulating handle comprising, a member to which said handle is pivotally secured, means pivotally mounting said member on said tool, means resiliently urging said member into fixed relation to said tool and interengaging means having a portion thereof on said tool and a portion thereof on said handle adapted to engage and lock said handle to said tool when said handle is used to lift said tool from a supporting surface.

2. An ambulatory surface treating tool having a manipulating handle comprising, a member to which said handle is pivotally secured to allow pivotal movement of said handle between an operating range and a storage position, means pivotally mounting said member on said tool, locking means on said tool and handle which are normally inoperative adapted to be locked by pivotal movement of said member responding to a straight pull applied to said handle when it is in storage position.

3. A handle supporting and locking mechanism for an ambulatory surface treating device comprising a handle connecting member pivotally connected to said handle and movably mounted on said device, and means for locking said handle and device in fixed relation operated by movement of said movable member and handle when said handle is in a predetermined position.

4. A surface treating device having a manipulating handle, a link movably connected to said handle, means providing a movable connection between said link and said device, spring means normally urging said link into fixed non-moving

relation with said device, and means actuated by movement of said link against the bias of said spring means for locking said handle to said device when said handle is in a predetermined position.

5. A surface treating device having a manipulating handle, means movably mounted on said device and pivotally supporting said handle, and normally disengaged locking means on said handle and said device engageable by movement of said handle vertically to prevent relative rotary movement between said handle and said device.

6. An ambulatory surface treating device having a manipulating and operating handle movable between a storage position and an operating position, means pivotally mounting said handle, means movably connecting said handle pivoting means to said device, resilient means for urging said handle pivoting means into fixed position with respect to said device when said handle is in operative position, and means operative in response to a lifting force on said handle when in storage position for locking said handle and device in fixed relation to each other.

7. An ambulatory surface treating tool including a manipulating handle, a supporting bracket rigidly secured to said tool, a link pivotally mounted on said bracket, a manipulating handle pivoted to said link for pivotal movement through an operating range of movement and for movement into a storage position, a fixed locking member on said bracket, a locking member on said handle which is normally free of said locking member on said bracket in all positions of said handle, said locking members being positioned to interengage and lock said handle to said tool when said link pivots in response to a lifting force applied to said handle while in storage position.

8. An ambulatory surface treating tool including a manipulating handle, a supporting bracket rigidly secured to said tool, a link pivotally mounted on said bracket, a manipulating handle pivoted to said link for pivotal movement through an operating range of movement and for movement into a storage position, a seat on which said link normally rests in fixed position, a locking member immovably fixed to said tool, a locking member on said handle positioned to engage said first mentioned locking member to secure said tool and handle in fixed relation in response to pivotal movement of said link away from said seat when said handle is in storage position.

9. An ambulatory surface treating tool comprising an operating and manipulating handle, means mounting said handle for pivotal movement through an operating range and into a storage position, means movably mounting said handle mounting means on said tool, resilient means normally maintaining said handle mounting means in contact with a fixed stop, a first locking member on said handle and a second locking member fixed with respect to said tool and positioned to be engaged by said first locking member when said handle mounting means is moved away from said fixed stop against the bias of said resilient means when said handle is in storage position.

10. An ambulatory surface treating tool comprising an operating and manipulating handle, means mounting said handle for pivotal movement through an operating range and into a storage position, means movably mounting said handle mounting means on said tool, resilient means normally maintaining said handle mounting means in contact with a fixed stop, resilient means urging said handle to pivot on said mounting means into storage position, a first locking member on said handle, a second locking member fixed with respect to said tool and positioned to be engaged by said first locking member when said handle mounting means is moved away from said fixed stop against the bias of said resilient means when said handle is in storage position, and a stop on said handle for engaging said second locking member when said handle is in storage position.

11. An ambulatory surface treating tool comprising an operating and manipulating handle, means mounting said handle for pivotal movement through an operating range and into a storage position, means movably mounting said handle mounting means on said tool, resilient means urging said handle into storage position and biasing said handle mounting means into contact with a fixed stop, a first locking member on said handle, and a second locking member fixed with respect to said tool and positioned to be engaged by said first locking member when said handle mounting means is moved away from said fixed stop against the bias of said resilient means when said handle is in storage position.

12. An ambulatory surface treating tool comprising an operating and manipulating handle, means mounting said handle for pivotal movement through an operating range and into a storage position, means movably mounting said handle mounting means on said tool, resilient means urging said handle into storage position and biasing said handle mounting means into contact with a fixed stop, a first locking member on said handle, a second locking member fixed with respect to said tool and positioned to be engaged by said first locking member when said handle mounting means is moved away from said fixed stop against the bias of said resilient means when said handle is in storage position, a stop on said handle, a stop on said tool positioned to engage said handle stop when said handle is in storage position, a detent abutment on said handle adapted when in engagement with said stop to retain said handle in fixed position, said abutment adapted to ride over said stop by raising said handle and movable mounting means against the bias of said resilient means in response to a pivoting force on said handle exceeding the pivoting force produced by the weight of the handle.

13. An ambulatory surface treating tool comprising an operating and manipulating handle, means mounting said handle for pivotal movement through an operating range and into a storage position, means movably mounting said handle mounting means on said tool, resilient means urging said handle into storage position and biasing said movable mounting means against a fixed stop, said handle having a stop portion and an abutment portion, a roller mounted on said tool in position to be engaged by said stop and said abutments, said stop being arranged to retain said handle in storage position against the bias of said resilient means when it is in contact with said roller, said abutment being adapted to retain said handle in fixed position when in engagement with said roller, and said handle being pivotable to pass said abutment over said roller by raising said handle and

said movable handle mount against the bias of said resilient means.

14. An ambulatory surface treating tool comprising a body portion, a handle mounting element movably mounted on said body portion, means normally retaining said mounting element in fixed position with respect to said body portion, a manipulating handle pivotally mounted on said mounting element, an anchor element fixedly mounted with respect to said body portion, a locking member adapted to prevent pivotal movement of said handle on said mounting element when engaged with said anchor element,

said locking member being mounted on said handle to traverse an arc of movement in which it does not engage said anchor element as said handle is pivoted through its full range of movement up to and including a rest position at one end of its range of movement, said locking member being mounted to engage said anchor member when said handle is operated while in said rest position to move said mounting member out of said fixed position.

HERBERT A. CONSOR.

No references cited.