DISPOSABLE LIGHT-CONDUCTIVE SPECULUM

Filed Dec. 21, 1970 2 Sheets-Sheet 1

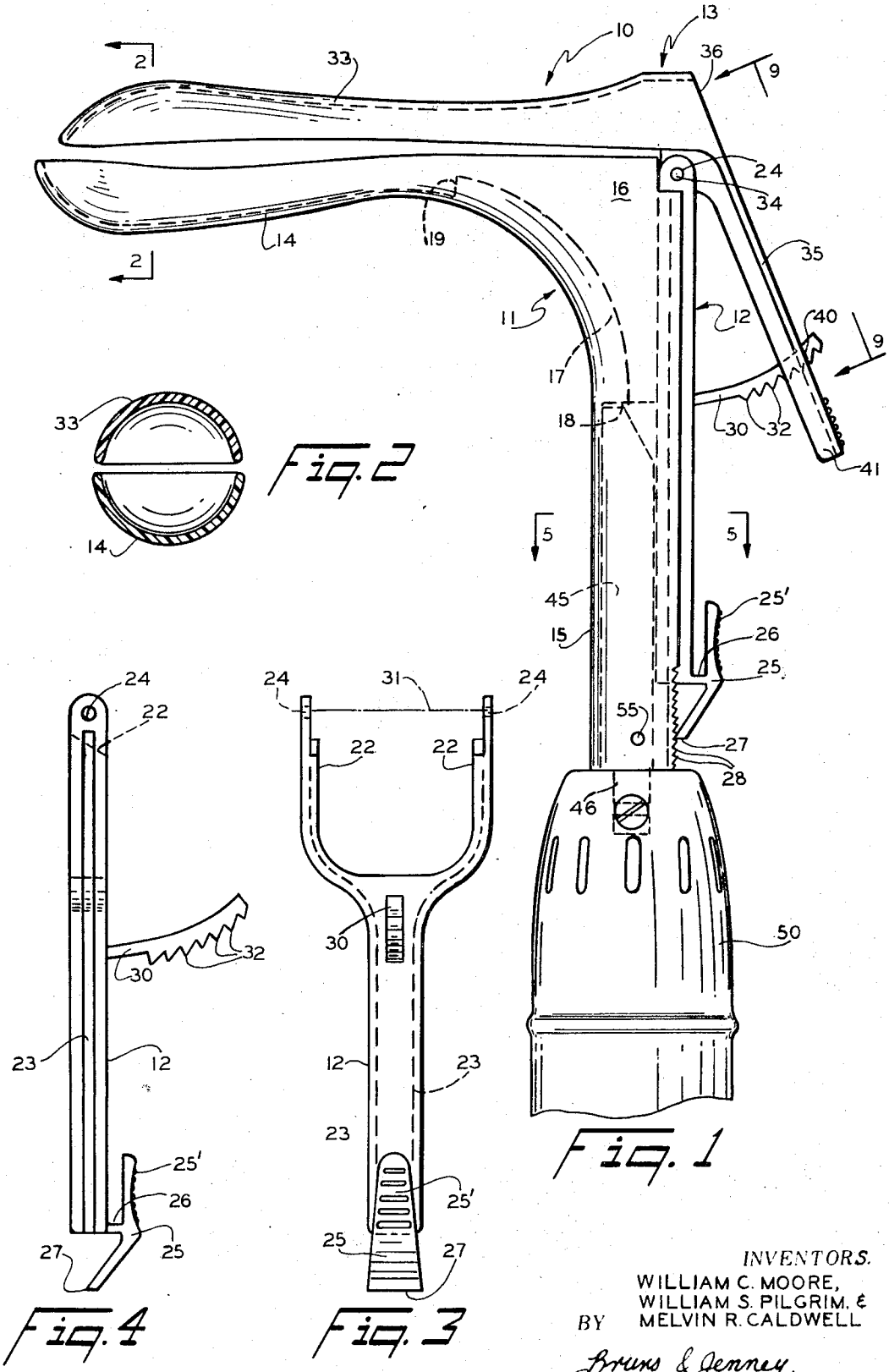

INVENTORS.
WILLIAM C. MOORE,
WILLIAM S. PILGRIM, &
MELVIN R. CALDWELL
BY
Bruns & Jenney,
ATTORNEYS.

DISPOSABLE LIGHT-CONDUCTIVE SPECULUM

Filed Dec. 21, 1970 2 Sheets-Sheet 2

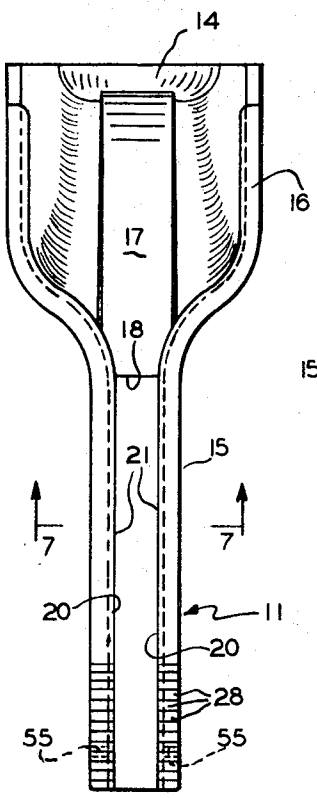

Fig. 6

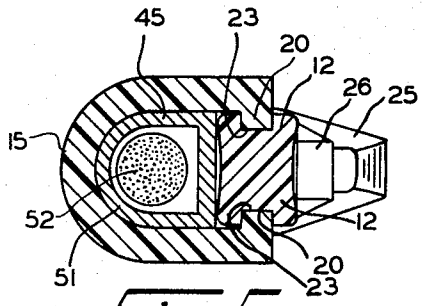

Fig. 5

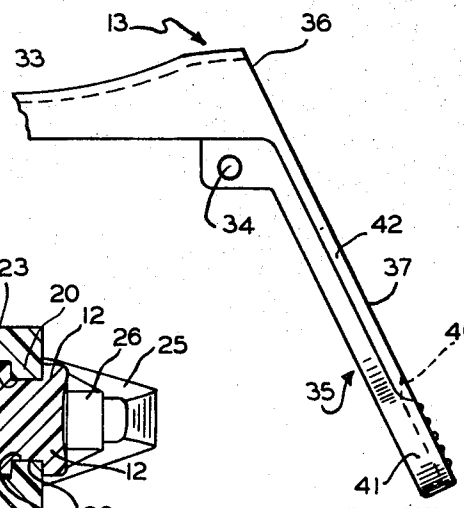

Fig. 8

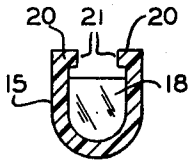

Fig. 7

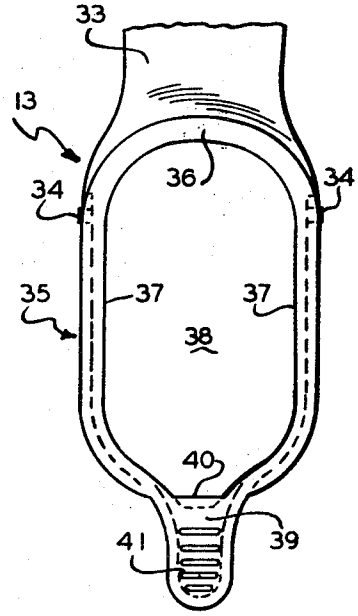

Fig. 9

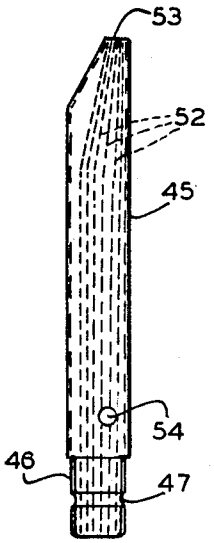

Fig. 10

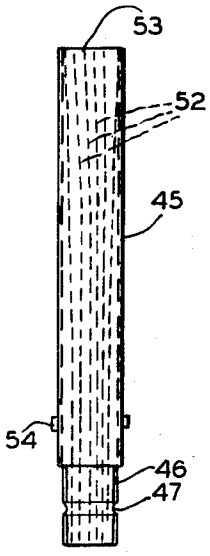

Fig. 11

INVENTORS.
WILLIAM C. MOORE
WILLIAM S. PILGRIM
MELVIN R. CALDWELL

BY Brumo and Jenney
Att'ys.

United States Patent Office

3,716,047

Patented Feb. 13, 1973

3,716,047

DISPOSABLE LIGHT-CONDUCTIVE SPECULUM

William C. Moore, Skaneateles, William S. Pilgrim, Port Byron, and Melvin R. Caldwell, Greene, N.Y., assignors to Welch Allyn Inc., Skaneateles Falls, N.Y.

Continuation-in-part of abandoned application Ser. No. 718,472, Apr. 3, 1968. This application Dec. 21, 1970, Ser. No. 99,967

Int. Cl. A61b *1/06*

U.S. Cl. 128—18 1 Claim

ABSTRACT OF THE DISCLOSURE

A three piece vaginal speculum including a fixed blade with integral depending hollow handle and a forked slide member carried on the handle. A pawl integral with the slide is selectively engageable with teeth on the handle. A movable blade is pivotally carried on the fork ends of the slide and has an integral lever projecting proximally. An integral slide tongue has teeth selectively engageable with an abutment on the lever. The three parts are molded plastic and a portion of the fixed blade is adapted to carry light from a source in the handle toward the blade ends.

CROSS-REFERENCE TO RELATED APPLICATION

This application is a continuation-in-part of application Ser. No. 718,472, filed Apr. 3, 1968, now abandoned, by the same inventors under the same title.

BACKGROUND OF THE INVENTION

This invention relates to medical diagnostic instruments and more particularly to a vaginal speculum having pivoted and adjustable parts, including light conducting means, which are of molded plastic so as to be economically made and disposable after use.

This type of instrument has a pair of dilatory blades and means are provided for varying both the spacing and angular relation of the blades. Specula of the prior art usually have adjustment means which are difficult to manipulate and/or lighting arrangements which do not adequately illuminate the body cavity being examined, the inadequate lighting being due to light losses and failure to make the lighting truly directional. Furthermore, specula with the requisite adjustability have usually been expensive to manufacture and difficult to sterilize.

SUMMARY OF THE INVENTION

The speculum of the invention comprises three pieces of molded non-toxic plastic material having high strength so that it can be made at a cost low enough to warrant discarding after a single use. The two blade members are of a clear plastic having light-conducting properties, and a handle or leg portion is provided for holding the instrument without contaminating the sterilized blades. The third part is of a more resilient but strong plastic and is provided with separate latching means for obtaining the desired spacing and angular adjustment of the blades. The latch means which permit these adjustments are located adjacent the handle and adjacent one another in easy reach of the thumb or a finger of the hand grasping the handle.

The handle or leg portion is hollow and is adapted to receive and releasably hold a light source or light carrier which, in turn, has a projecting end adapted to be releasably secured in a light source handle for transmitting light to a curved plastic light bar integral with one blade and its integral handle or leg. The light bar has an optical surface in the hollow of the handle or leg for receiving light from the source and another optical surface spaced from the facing the distal ends of the blades for emitting the light and directing it toward the area of the body

cavity being examined. The examining physician is able to hold and manipulate the instrument with one hand leaving his other hand free for obtaining a biopsy sample or performing any other necessary operation.

BRIEF DESCRIPTION OF THE DRAWINGS

FIG. 1 is a side elevational view of the speculum according to the invention shown in combination with a light source handle shown fragmentarily;

FIG. 2 is a sectional view of the blades on the line **2—2** of FIG. 1;

FIGS. 3 and 4 are plan and side elevational views, respectively, of the slide member shown in FIG. 1;

FIG. 5 is an enlarged sectional view on the line **5—5** of FIG. 1;

FIG. 6 is a proximal end view of the fixed blade member of FIG. 1;

FIG. 7 is a sectional view on the line **7—7** of FIG. 6;

FIGS. 8 and 9 are fragmentary side elevational and plan views of the movable blade member, respectively, the latter as viewed in the direction of the arrows **9—9** of FIG. 1;

FIGS. 10 and 11 are side elevational views, rotated 90 degrees one from the other, of the carrier member of FIG. 1.

DESCRIPTION OF THE PREFERRED EMBODIMENT

Referring to FIG. 1, the vaginal speculum **10** comprises the fixed blade member **11**, the slide member **12**, and the movable blade member **13**.

The fixed blade member **11** has a conventionally curved and smoothly rounded trough-shaped blade **14** and an integral depending handle **15**, hereinafter referred to as leg to prevent confusion with the light source handle.

The trough shape of the blade **14** continues to its proximal end **16** where the trough deepens and its floor curves to open into the hollow leg **15**. In this curve, a curved light bar portion **17** of substantially uniform rectangular cross sectional configuration is integrally molded so that it projects from the floor of the trough. Alternatively, the curved portion may be separately molded and secured in place.

The curved light bar **17**, best seen in FIG. 6, has a light-receiving optical surface **18**, best seen in FIG. 7, inside the hollow leg **15** facing the end of the leg. At its other end, the light bar **17** has a light-emitting optical surface **19** that is substantially perepndicular to the longitudinal axis of the fixed blade. The light emitting surface **19** is the only surface where the light rays transmitted by the light bar exceed the critical angle which allows the rays to be emitted. Moreover, the light rays emitted from the surface **19** are directional rather than scattered, and substantially all of the light is directed towards the field being examined adjacent the distal ends of the blades without having scattered rays directed back into the eyes of the examining physician. In this connection, the substantially uniform cross section of the light bar is important because if the bar were tapered from its light-receiving to its light-emitting end the light rays would exceed the critical angle before reaching the light-emitting end and there would be unwanted light losseses and scattered rays.

The location of the light bar emitting surface on the blade **14** is also important. As can be seen from FIG. 1, the light bar terminates so that its light-emitting surface **19** is spaced from the distal ends of the blades by a distance that is approximately two-thirds of the length of the fixed blade. In normal usage, the extent of the penetration of the blades into the body cavity is a little less than this distance so that there is virtually no light loss due to body contact with the patient in the area of the light bar.

Leg **15**, below the light bar **17**, has a U-shaped sidewall, the end of each arm of the U having an inwardly projecting flange **20**, best seen in FIG. 5. The flanges **20** are spaced apart leaving a slot **21** in the proximal side of, and extending the length of, leg **15**. As best seen in FIG. 6, the flanges continue in the same common plane along the proximal end **16** of the fixed blade **11** where it is flared and faired to widen above the leg **15**. Flanges **20** terminate short of but adjacent the top of the end **16** in FIG. 6.

The slide member **12**, which is made of a tough but resilient plastic material such as polypropylene or nylon, has a forked upper end **22—22** and conforms generally to the shape of the slot **21** and its widened portion at the proximal end **16** of the fixed blade. Each side of the slide **12** is grooved at **23**, the grooves **23** extending up the outer sides of the forked arms **22** in coplanar fashion to a point just short of the ends of arms **22** where the arms have coaxially disposed journal holes **24**.

The grooves **23** are dimensioned to receive the flanges **20** of leg **15** and, when the slide **12** is in its unextended position, as shown in FIG. 1, the grooves **23** along arms **22** receive the flanges along the widened proximal end **16** of fixed blade member **11**.

The unforked end of the slide member **12** has a pawl-shaped lever or pawl **25** connected at its center to the slide by a relatively thin bridging portion **26** of plastic material so that the lever or pawl **25** can be tilted by flexing the bridging portion **26**. The pointed nose **27** of the pawl **25** is biased toward and engageable with ratchet-shaped teeth **28** on the proximal face of the leg **15** so that when the slide **12** is moved upward in FIG. 1 with respect to leg **15** its return downward is prevented by the engagement of the nose **27** with the teeth **28** until released by pushing against the other finger piece end **25'** of pawl **25**.

The slide member **12** also has an integral proximally projecting, comparatively thin tongue **30** which is curved about a center lying on the common axis **31**, shown in FIG. 3, of the journal holes **24** in arms **22** of the slide. Tongue **30** has ratchet teeth **32** thereon.

The movable blade member **13** and fixed blade member **11** are of a transparent, strong, and comparatively inflexible plastic material such as acrylic or styrene plastic. While this plastic material is transparent, members seen through the plastic are shown in broken lines in the drawings to prevent confusion.

Movable blade member **13** has an inverted-trough shaped blade **33** of conventional smoothly curved and rounded shape. At the proximal end of blade **33** the member **13** has an outwardly projecting pin **34** on each side which pins are engaged in the holes **24** of slide arms **22** by spreading the arms apart, the resiliency of the material of slide **12** retaining the pivot pins **34** engaged in the journal holes.

A lever portion **35** projects proximally at an obtuse angle from the proximal end **36** of blade **33**. The lever portion **35**, best seen in FIG. 9, comprises two arms **37** projecting from the sides of the open end **36** of the blade and defining a proximal throat opening **38** in the lever **35** for access to the instrument throat formed by the oppositely faced trough shape of the blades. At the end of the throat opening **38** arms **37** are joined by a yoke portion **39** which has a pawl-like bevelled edge or abutment indicated at **40** in FIGS. 8 and 9. A pendant thumb or finger piece **4** is provided on the yoke portion **39**, and arms **37** have outwardly projecting stiffening flanges **42** as shown in FIG. 8.

The bevelled edge **40** is located so as to be engaged in one or another of the ratchet teeth **32** by the bias of the tongue **30** as the acute angle which lever **35** normally makes with the leg **15** is reduced. Adjusting the angle between the lever portion **35** and leg portion **15**, with its attached slide member **12**, adjusts the angular relation of blade **33** with respect to blade **14** and hence the spacing of the distal ends of the blades.

Referring again to FIG. 1 a non-disposable member, the light carrier **45**, is shaped to fit within the hollow of leg portion **15** adjacent the slide **12** as best ssen in FIG. 5. The carrier **45** is dimensioned to have one end **46** project beyond the end of leg **15** and this end **46** is square in cross section with a detent groove **47** therearound at approximately the midpoint of the projecting end. The square end **46** is adapted to fit in the conforming socket of a conventional light-source handle fragmentarily shown at **50** in FIG. 1. The handle socket has one or more spring pressed ball detents, not shown, to engage the detent groove **47**.

Carrier **45** has a sidewall **51** surrounding a bundle of glass fibers **52** for carrying light from the source at the end **46** to the end **53** adjacent the face **18** of lght bar **17**, and has a pin **54** releasably engageable in hole **55** in the leg portion.

Alternatively, of course, a special light handle, with one end shaped like the carrier **45**, may be provided, the light source being disposed in the end thereof for illuminating the surface **18**.

In operation, the three piece speculum **10** is supplied in a clean sealed package. The physician unwraps the instrument, being careful to grasp only the leg portion **15**. He then inserts his light source handle or the carrier **45** thereof in the hollow of the leg. The light handle now is releasably secured to leg **15** of the speculum and the speculum may be manipulated by grasping leg portion **15**.

It will be noted that in FIG. 1, blades **14** and **33** are not completely closed because the abutment edge **40** of the lever **35** is not engaged in the outermost tooth **32** of tongue **30**. It will be understood that the speculum **10** would normally be completely closed at this time, the narrower distal end of the shorter blade **33** being depressed inside the trough of fixed blade **14**.

The blades of speculum **10** are now inserted in the usual manner in the body cavity to be examined and the light source illuminated. With a thumb or finger of the hand grasping the instrument, the physician moves the slide **12** along leg **15** by pressure against the pointed end portion of the pawl **25** to separate the proximal ends of the blades. When the labial portion of the cavity is sufficiently dilated, the pressure on pawl **25** is ended and the point **27** of the pawl stays engaged with one of the ratchet teeth **28** of the leg and remains biased in engagement therewith by the resiliency of bridging portion **26**, latching the slide in relation to the fixed blade member **11**.

With the thumb or a finger of the hand grasping the instrument, the physician now depresses the lever **35** by pressure on the finger piece **41** thereby rotating the movable blade member **13** on its pivot pins **34** and changing the angular relation of the blades. As the distal ends of the blades separate, the vaginal walls are distended so as to unfold for examination. The tongue **30** is biased by its resiliency against the bevelled edge **40** so that the ratchet teeth **32** are successively engaged by the edge **40** as the distal ends of the blades open. When sufficient distension is accomplished, pressure on the finger piece **41** can stop but the blades remain latched in their angular position.

For removal of the instrument the distal ends of the blades are closed by digital pressure against the end of tongue **30** to disengage teeth **32** from the edge **40**. Then the proximal ends of the blades are closed by digital pressure on the release end **25'** of the pawl **25**. Pressure by the body cavity walls returns the blades to their normal or starting position.

When the instrument is withdrawn the physician can remove his light source handle **50** from the speculum **10** and the three part speculum **11**, **12** and **13**, being inexpensively obtained, can then be thrown away.

It will be seen that, in addition to the low cost of the molded plastic parts, the clear plastic blades provide visibility over a larger area. The curved plastic light bar portion **17** forms a light-conducting means for bringing

light from a source remote from the patient-contacting portions of the instrument, conducts the light around the curve without loss and directs the light rays toward the distal ends of the blades. The slide member **12**, being of more flexible plastic material, has integral therewith the pawl **25** and the tongue **30**, the biased members of the two latching means, and also facilitates assembly of the trunnion pins **34** in their journals **24**. Also the cross-sectional configuration of the leg portion **15** provides sufficient flexibility in the area of the detent holes **55**. All of the latch means are, therefore, integrally molded in the three disposable members and are not additional parts as in the prior art. The adjusting means **25** for the spacing of the proximal ends of the blades and the finger piece **41** for adjusting the angular relation of the blades are close together and within easy reach of a thumb or finger of the hand grasping the leg **15** or the light handle **50**, as are the end of tongue **30** and finger piece **25'** which release the latch means.

As will be apparent to those familiar with the art, the invention may be embodied in other specific forms without departing from the spirit or essential characteristics thereof.

We claim:

1. A vaginal speculum comprising: a fixed dilatory blade member formed of a transparent, comparatively inflexible plastic material and having a depending hollow leg portion, a slide member formed of a relatively more flexible plastic material than the fixed blade member and having a forked end, and a movable dilatory blade member formed of a comparatively inflexible plastic material, the movable blade member being pivotally carried by the forked end of the slide member, the leg portion and the slide member having cooperating means for slidably connecting the slide member to the leg portion, the movable blade member having a lever portion projecting from adjacent its pivotal connection with the slide member, the fixed blade member having a curved light bar projecting from the interior surface thereof, the light bar terminating at a point spaced approximately two-thirds of the length of the blade from its distal end in a light-emitting optical surface disposed at substantially right angles to the longitudinal axis of the fixed

blade member and having a light-receiving optical surface adapted to receive light from a source disposed in the hollow leg portion, the slide member and the leg portion having adjustable connection means including a pawl projecting from the slide member and ratchet teeth on the leg portion engageable by the pawl for locking the slide member and leg portion in adjusted position, and the slide member and lever portion having adjustable connection means for locking the blade members in adjusted angular relation, the last-named means including a curved ratchet-toothed tongue projecting from the slide member toward the lever portion, the lever portion including pawl means engageable by the ratchet teeth of the tongue, the slide member pawl being biased toward the leg portion teeth and the tongue being biased toward the lever portion pawl means by the resiliency of the plastic material of which the slide member is formed; the slide member, its pawl and its curved ratchet-toothed tongue being biased toward the lever portion pawl means by the resiliency of the plastic material of which the slide member is formed; the slide member, its pawl and its curved ratchet-toothed tongue being formed as a one-piece unit of resilient plastic material.

References Cited

UNITED STATES PATENTS

2,235,979	3/1941	Brown	128—6
2,186,143	1/1940	Neugass	128—16 X
3,532,088	10/1970	Fiore	128—18
596,399	12/1897	Fox	128—17
2,756,742	7/1956	Barton	128—15
2,247,258	6/1941	Shepard	128—6 X
3,373,737	3/1968	Moore et al.	128—9
2,240,402	4/1941	Joroslow	128—16 X
1,246,338	11/1917	Smit	128—16

FOREIGN PATENTS

540,806	10/1941	Great Britain.

RICHARD A. GAUDET, Primary Examiner

G. F. DUNNE, Assistant Examiner