July 27, 1937. H. M. LOFTON 2,088,426

FIRE HYDRANT

Original Filed March 2, 1933

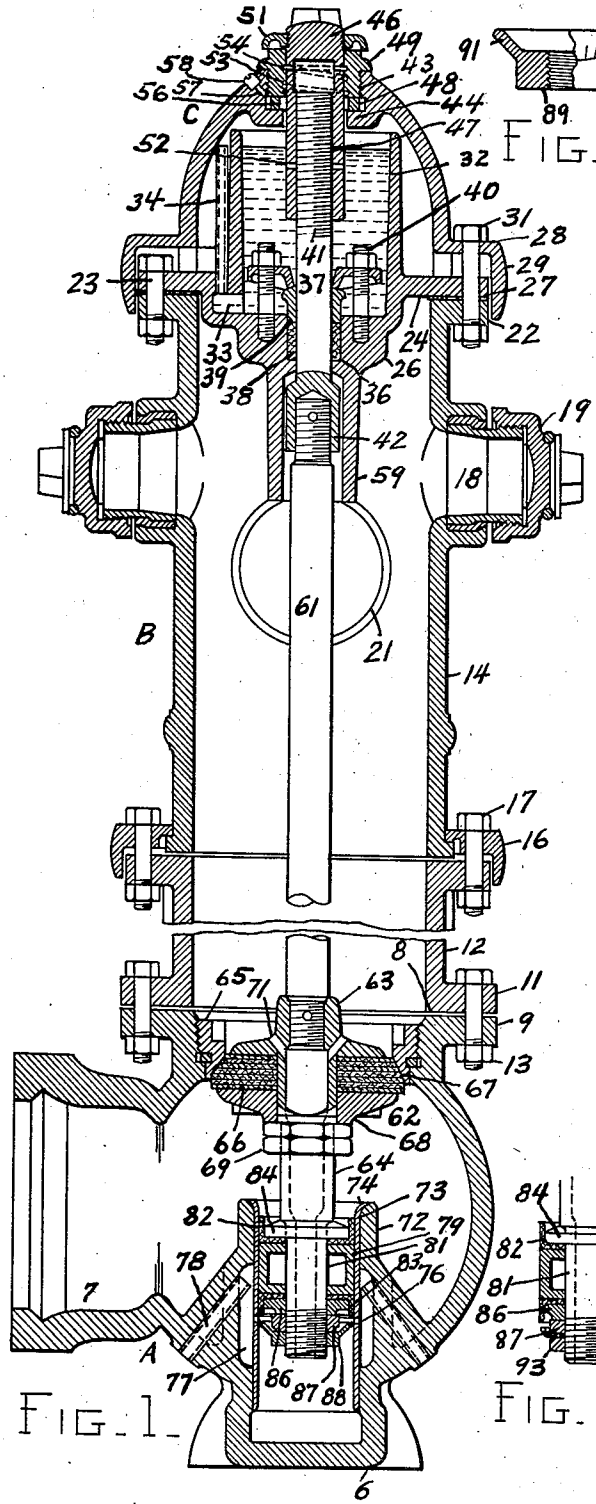

FIG. 1.

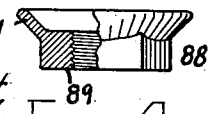

FIG. 4.

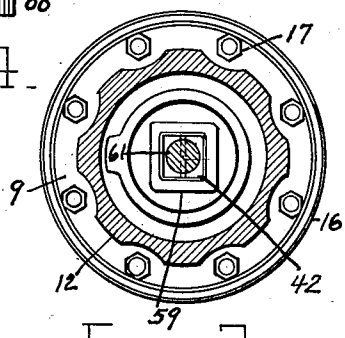

FIG. 3.

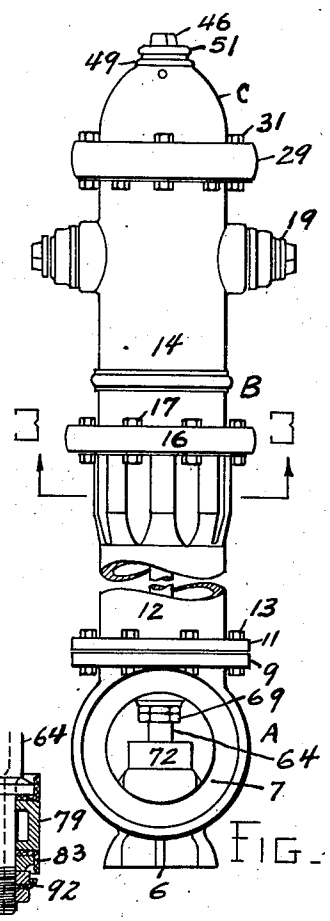

FIG. 2.

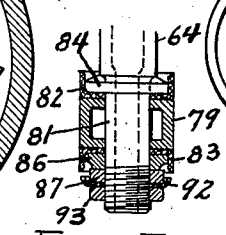

FIG. 5.

INVENTOR
HERBERT M. LOFTON
BY T. B. Hunt Phrir's
ATTORNEY

Patented July 27, 1937 2,088,426

UNITED STATES PATENT OFFICE

2,088,426

FIRE HYDRANT

Herbert M. Lofton, Chattanooga, Tenn.

Original application March 2, 1933, Serial No. 659,293. Divided and this application June 4, 1935, Serial No. 24,938

10 Claims. (Cl. 137—13)

This invention relates to fire hydrants and refers particularly to the type of hydrant in which the main valve is to a large extent counter-balanced in its opening and closing movements with respect to the pressure of water from the street main, as fully shown and described in my U. S. Letters Patent No. 1,717,392, granted June 18, 1929.

The invention herein set forth refers to the counter-balancing means and more particularly to the safeguarding of the parts thereof during the removal and re-introduction of the main valve.

This application is a division of my application Serial No. 659,293, filed March 2, 1933, allowed October 18, 1934, forfeited, renewed June 4. 1935, and now Patent No. 2,020,365, issued November 12, 1935.

An object of the invention is to provide, in a valve having a counter-balancing piston with packing rings operating in a cylinder, means to prevent injury to the packing when it is necessary to remove the main valve and then re-introduce the said piston into its cylinder.

Another object is to provide means for guiding the said piston into the cylinder.

Still another object is to provide means for keeping the packing moist and pliable.

According to the invention the hydrant comprises a shoe and a stock, a main valve for controlling the passing of water from the shoe to the stock, means at the upper end of the stock for raising and lowering the valve, a cylindrical guide in said shoe, a piston operating in said cylinder and connected to the valve, means having an upwardly turned flange below and connected with said piston for guiding and centralizing said main valve and said piston when introducing same into position in said hydrant. The piston may be secured to a shaft extending down from the main valve and the said piston may be provided with cup shaped packing members extending from both sides thereof, while the flanged means may be retained on said shaft by bolts and so placed as to prevent injury to the packing members during the introduction of the piston into the cylindrical guide.

The drawing illustrates an embodiment of the invention and the views therein are as follows:

Fig. 1 is a vertical sectional view of a fire hydrant embodying the invention and having a portion of the stock or barrel removed for shortening the height thereof.

Fig. 2 is a side elevation of the same.

Fig. 3 is a transverse sectional view taken on the line 3—3 of Fig. 2.

Fig. 4 is a detail view partly in section of the guide member employed below the balancing piston in the shoe.

Fig. 5 is a fragmentary detail sectional view of the piston employing another type of guide member.

The hydrant comprises a shoe A, a stock or barrel B, and a bonnet C.

The shoe A has a bottom 6, preferably flat, and is provided with a lateral tubular flange portion 7 for connection with the water supply main in the street. The upper part 8 of the shoe is cylindrical and this part has an annular flange 9 which aligns with the annular flange 11 on the bottom of the lower stock section 12, and these flanges are fastened together with bolts 13.

The upper and lower stock sections 14 and 12 respectively are clamped together by a frangible coupling member 16 and bolts 17 position this member so that when the upper section of the hydrant (the part above the ground) is impacted by a heavy blow such, for instance, as an automobile truck, the said coupling member will fracture and thus prevent injury to the operating mechanism of the hydrant. This frangible coupling member now forms the subject matter of the parent application above referred to.

The upper section 14 of the stock B is provided with the usual hose nozzles 18 having caps 19 and the usual steamer nozzle 21, while its upper end is also provided with an annular flange 22. This flange supports and is bolted to, by bolts 23, a plate flange 24 on an oil cup casting 26, and a gasket 27 between said flanges provides a water-tight joint.

The bonnet C has an outwardly extending annular flange 28 terminating in an annular skirt 29. The flange is fastened to the upper stock section 14 by bolts 31 passing through the bonnet flange 28, the casting flange 24 and the flange 22 on said stock section, while the skirt 29 encloses said flanges to give a smooth finished appearance to the connection as shown in Fig. 2.

The oil cup casting 26 has an oil reservoir 32 which has a recess 33 at the bottom thereof and a standpipe 34 is mounted to communicate with said recess while its upper end is slightly below the top of said reservoir.

The central part of the casting 26 and immediately below the reservoir 32 is provided with a stuffing box 36 through which the stub shaft 37 extends. This stuffing box is filled with packing 38, contacted by the gland 39, while adjust-

ing bolts 40 are provided for maintaining a water-tight joint around said shaft.

The stub-shaft has a screw-threaded portion 41 on its upper part while its intermediate part which extends into and operates through the packing 38 is smooth and unthreaded and terminates in a square or polygonal part 42.

The oil reservoir and the operating mechanism employed with the screw-threaded stub-shaft are housed in the bonnet C, which is recessed at 43 and has an inwardly directed flange 44 at the bottom thereof.

A cylindrical nut 46 extends through the upper end of the bonnet and said nut is screw-threaded at 47 to engage the threaded portion 41 of the stub-shaft 37, and said nut is also provided with an annular flange 48 which rests on the flange 44 of the bonnet and is retained therein by a bushing 49 threaded into said recess 43.

The nut 46 is also provided with a weather cap 51 which prevents water from reaching the operating parts and freezing therein.

The nut 46 has one or more transverse holes 52 extending through same and these holes are positioned below the level of oil in the oil reservoir 32 so that when the top of the stub shaft 37 is below said holes the oil will enter the hollow interior of said nut and rise therein to the common level of oil in said reservoir so that when said shaft is elevated the oil will be entrapped in the hollow interior of said nut and raised with said shaft.

The inner wall of the bushing 49 is grooved preferably in helical form as at 53 and the upper part of the nut is provided with a transverse hole 54 so that when the oil is elevated in the hollow interior of the nut it will pass through said hole and communicate with the helical groove, while the excess oil will pass down through the vertical hole or holes 56 in the flange 48 of the nut 46.

Of course the bushing 49 may be removed for pouring oil into the reservoir, but in order to prevent the necessity of such labor I have provided a small hole 57 normally closed by the plug 58.

The operating mechanism and system of lubrication now forms the subject matter of a companion application filed on even date herewith and bearing Serial No. 24,937.

The lower polygonal end of the stub shaft 42 fits loosely into a vertical polygonal guide aperture 59 in the downwardly extending part of the oil cup casting 26 and the upper end of the valve rod or stem 61 is secured to said stub shaft while its lower end carries the main valve 62.

The main valve comprises an upper disk-like body 63 and a downwardly extending tubular shaft 64. A series of disks of leather or other tough pliable material 66 on the hollow shaft and adjacent the disks 63 form a conical packing adapted in shape to fit the beveled seat 67 of the seat ring 65 which is detachably screwed into the upper end of the shoe while a bottom annular plate 68 fitted loosely over the tubular shaft 64 is clamped in position against the bottom of said packing material and held firmly in position by means of clamping nuts 69. The leather disks constituting the packing of the main valve are therefore tightly clamped together between the disk 63 and annular plate 68. The valve rod or stem 61 extending downwardly from the stub shaft 37 is screwed into the disk-like body 63 and pinned therein to prevent rotation relative to the valve, while the square or polygonal portion 42 of the stub shaft 37, working as it does in the polygonal guide aperture 59, prevents the rotation of the main valve and its operating rod.

The disk-like body of the main valve 62 has drain ports 71 through which the water may flow from the stock or barrel B into the tubular shaft 64 for draining the said stock when the main valve is closed.

The interior and bottom of the shoe A is provided with an integrally formed upstanding substantially tubular part 72 into which a bronze bushing 73 is internally fitted to form a cylinder with an outwardly flared top 74. About midway its height the tubular bushing 73 is provided with a lateral drainage port 76 which communicates with an annular chamber 77 formed integrally with the tubular part 72. This annular chamber extends a considerable distance above the drainage port 76 and tubes 78 are so placed in said shoe and with their upper ends near the top of said chamber so that a head of water is always maintained in said chamber and consequently within the tubular bushing 73 as later explained. The tubular shaft 64 has a piston 79 on its reduced part 81 and is provided at both the top and bottom of the same with cup shaped leather washers 82 and 83 respectively. These washers have their concave part extending away from the piston, and washer plates 84 and 86 respectively fit within said cups and prevent the collapse of the wall thereof. The bottom of the hollow shaft 64 is threaded and a clamping nut 87 clamps the parts against the annular shoulder caused by the reduction of diameter in said shaft, while a guide member 88 has a nut portion 89 and a flared annular skirt 91 which will guide the piston 79 and its associated parts into the internal bore of the bushing 68 and will thus prevent mutilation of the cup shaped washer 83.

Fig. 5 shows a modified form of guide member which consists of a plate 92 having an upturned edge and secured on said shaft by the nuts 87 and 93.

When the hydrant has been opened by lowering the valve 62 and has again been closed, the water remaining in the stock B will drain down through the ports 71 into the hollow interior of the shaft 64 and thence below the piston in the interior of the bushing 73, and will flow out through the aperture 76 into the annular chamber 77. The only escape for the drain water from this chamber is through the tube 78, so that a head of water will always be maintained in said chamber and consequently in the interior of the bushing 73, and since the leather cup shaped packing 83 is maintained submerged in the waste water this water will keep the same in a moist and pliable condition. Of course it is understood that the shoe is in communication with a source of water supply, and since the entire shoe would at all times be filled with water the upper cup shaped packing 82 would be constantly submerged in the water and would therefore be kept in a soft pliable condition.

The piston 79 being positively connected with the main valve 62 and spaced therefrom, said parts are each adapted to be subjected to the pressure of water supply in the shoe, the pressure operating on the under side of the main valve 62 and upon the upper side of the piston. By reason of this construction the main valve is substantially counter-balanced by the piston

79 which greatly reduces the amount of effort required to open the main valve. This counter-balancing feature is of the same nature as the arrangement shown in my patent No. 1,717,392, dated June 18, 1929.

When it is necessary to withdraw the main valve and said ring from the stock of the hydrant and thereafter reintroduce the main valve, said ring and waste valve, it is necessary to prevent accidental injury to the cup shaped packing 83, when the parts are returned to their working position. The use of the guiding member 88 or plate 92 insures the ready introduction of the piston 79 and its associated parts into the bushing 73 as the shape of the skirt 91 on the guiding means or upturned annular flange on the plate cooperating with the flared upper end of the bushing will positively centralize the parts and insure against injury to the cup shaped packing 83. In other words, the guide means and flared upper end of the bushing cooperate to positively centralize and guide the parts to prevent injury to the packing.

Of course the hydrant illustrated and described herein may be modified in various ways without departing from the invention herein set forth and hereafter claimed.

The invention is hereby claimed as follows:

1. In a fire hydrant comprising a shoe, a stock and a bonnet part, a main valve for controlling the passing of water from the shoe to the stock, means for lowering and raising the valve, a cylindrical guide in said shoe, a counter-balancing piston operating in said guide and connected to the valve for assisting in the opening of said valve, and protective means below and connected with said piston for guiding and centralizing said piston and said main valve when introducing same into position in said hydrant.

2. In a fire hydrant comprising a shoe, a stock and a bonnet part, a main valve for controlling the passing of water from the shoe to the stock, means for lowering and raising the valve, a cylindrical guide in said shoe, a counter-balancing piston operating in said guide and connected to the valve for assisting in the opening of said valve, and protective means having an upwardly turned annular flange below and connected with said piston for guiding and centralizing said piston and said main valve when introducing same into position in said hydrant.

3. In a fire hydrant comprising a shoe, a stock and a bonnet part, a main valve for controlling the passing of water from the shoe to the stock, means for lowering and raising the valve, a cylindrical guide in said shoe, a shaft below said valve, a counter-balancing piston on said shaft and operating in said guide for assisting in the opening of said valve, packing members associated with said piston, and annular protective means on said shaft and below said piston and packing members for guiding and centralizing said piston and main valve and preventing injury to said packng members when introducing same into position in said hydrant.

4. In a fire hydrant comprising a shoe, a stock and a bonnet part, a main valve for controlling the passing of water from the shoe to the stock, means for lowering and raising the valve, a cylindrical guide in said shoe, a shaft below said valve, a counter-balancing piston on said shaft and operating in said guide for assisting in the opening of said valve, cup shaped packing members associated with said piston, and annular means on said shaft and below said piston and packing members for guiding and centralizing said piston and main valve and preventing injury to said packing members when introducing same into position in said hydrant.

5. In a fire hydrant comprising a shoe, a stock, and a bonnet part, a main valve for controlling the passage of water from the shoe to the stock, a valve stem, means cooperating with said stem for lowering and raising the valve, a cylindrical guide in said shoe, a hollow shaft below the valve, openings in the valve communicating with the hollow interior of said shaft for draining said stock when the valve has been opened and closed, a counter-balancing piston on said shaft operating in said guide, and means for maintaining a drain water level below the piston, and means for guiding said piston into said guide.

6. In a fire hydrant comprising a shoe, a stock, and a bonnet part, a main valve for controlling the passage of water from the shoe to the stock, a valve stem, means cooperating with said stem for lowering and raising the valve, a cylindrical guide in said shoe, a hollow shaft below the valve, openings in the valve communicating with the hollow interior of said shaft for draining said stock when the valve has been opened and closed, a counter-balancing piston on said shaft operating in said guide, openings in said guide for draining water deposited from said hollow shaft, and means for maintaining a level of said water above said openings, and means for guiding said piston into said guides.

7. In a fire hydrant comprising a shoe, a stock, and a bonnet part, a main valve for controlling the passage of water from the shoe to the stock, a valve stem, means cooperating with said stem for lowering and raising the valve, a cylindrical guide in said shoe, a hollow shaft below the valve, openings in the valve communicating with the hollow interior of said shaft for draining said stock when the valve has been opened and closed, a counter-balancing piston on said shaft operating in said guide, openings in said guide, a chamber outside said guide and communicating therewith through said openings, and means in said chamber for maintaining a water level in said guide above said openings, and means for guiding said piston into said guides.

8. In a fire hydrant comprising a shoe, a stock, and a bonnet part, a main valve for controlling the passage of water from the shoe to the stock, a valve stem, means cooperating with said stem for lowering and raising the valve, a cylindrical guide in said shoe, a hollow shaft below the valve, openings in the valve communicating with the hollow interior of said shaft for draining said stock when the valve has been opened and closed, a counter-balancing piston on said shaft operating in said guide, a packing member on the shaft below said piston, openings in said guide for draining water deposited from said hollow shaft, and means for maintaining a level of said water above said openings and said packing to keep the latter moist, and means for guiding said piston into said guides.

9. In a fire hydrant comprising a shoe, a stock, and a bonnet part, a main valve for controlling the passage of water from the shoe to the stock, a valve stem, means cooperating with said stem for lowering and raising the valve, a cylindrical guide in said shoe, a hollow shaft below the valve, openings in the valve communicating with the hollow interior of said shaft for draining said stock when the valve has been

opened and closed, a counter-balancing piston on said shaft operating in said guide, a packing member on the shaft below said piston, openings in said guide for draining water deposited from said hollow shaft, means for maintaining a level of said water above said openings and said packing to keep the latter moist, and means having an upwardly turned flange below and adjacent said packing member for guiding and centralizing said piston and main valve and preventing injury to said packing member when introducing same into position in said hydrant.

10. In a fire hydrant comprising a shoe, a stock, and a bonnet part, a main valve for controlling the passage of water from the shoe to the stock, a valve stem, means cooperating with said stem for lowering and raising the valve, a cylindrical guide in said shoe, a hollow shaft below the valve, openings in the valve communicating with the hollow interior of said shaft for draining said stock when the valve has been opened and closed, a counter-balancing piston on said shaft operating in said guide, a cup shaped packing member on the shaft below said piston and having its open end extending downward, openings in said guide for draining water deposited from said hollow shaft, means for maintaining a level of said water above said openings and said packing to keep the latter moist, and means having an upwardly turned flange below and adjacent said packing member for guiding and centralizing said piston and main valve and preventing injury to said packing member when introducing same into position in said hydrant.

HERBERT M. LOFTON.