United States Patent [19]

Marshall

[11] **Patent Number: Des. 282,928**

[45] **Date of Patent: ** Mar. 11, 1986**

[54] **TELEPHONE HANDSET**

[75] Inventor: **Eric J. Marshall,** London, England

[73] Assignee: **British Telecommunications,** England

[**] Term: **14 Years**

[21] Appl. No.: **516,411**

[22] Filed: **Jul. 22, 1983**

[30] **Foreign Application Priority Data**

Jan. 24, 1983 [GB] United Kingdom 1011008

[52] **U.S. Cl.** **D14/63;** D14/64; D14/59

[58] **Field of Search** ..... D14/52, 59, 53, 60, D14/63, 64; 179/179, 2 EA, 2 E, 100 E, 100 D, 101, 102

[56] **References Cited**

U.S. PATENT DOCUMENTS

D. 244,472	5/1977	Hiller	D14/63
D. 266,325	9/1982	Butchko	D14/63
D. 266,763	11/1982	Grae	D14/64
D. 270,445	9/1983	Chen	D14/53
D. 271,693	12/1983	Kessler	D14/63
D. 272,146	1/1984	Mo	D14/53
D. 275,006	8/1984	Danielson et al.	D14/63
D. 275,484	9/1984	Brown, Jr. et al.	D14/63
D. 278,053	3/1985	Menn et al.	D14/64

OTHER PUBLICATIONS

Best Catalog, 1983–1984, p. 337, Audiovox Cordless, Model AT–11.

Primary Examiner—Wallace R. Burke
Assistant Examiner—Horace B. Fay
Attorney, Agent, or Firm—William A. Drucker

[57] **CLAIM**

The ornamental design for a telephone handset, as shown and described.

DESCRIPTION

FIG. **1** is a side elevational view of a telephone handset showing my new design, the side opposite thereto being substantially a mirror image;
FIG. **2** is a left end elevational view thereof;
FIG. **3** is a right end elevational view thereof;
FIG. **4** is a top plan view thereof;
FIG. **5** is a bottom plan view thereof; and
FIG. **6** is a perspective view of underneath surface of the handset.

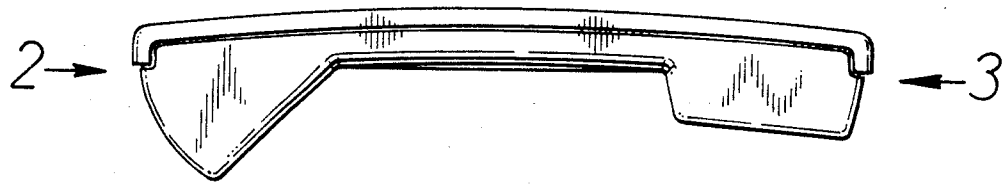

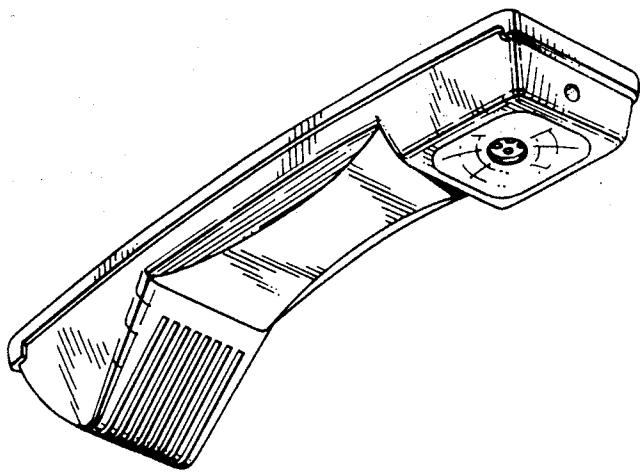

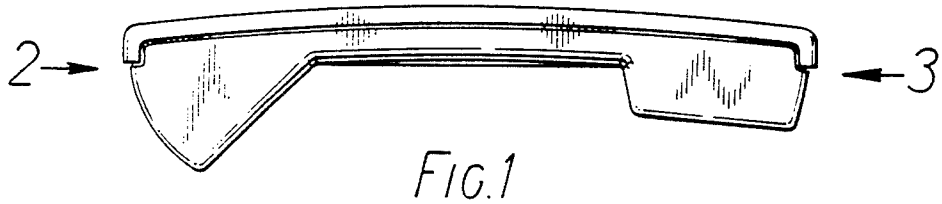

FIG. 1

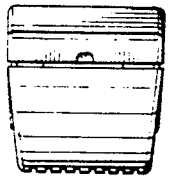

FIG. 2

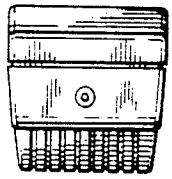

FIG. 3

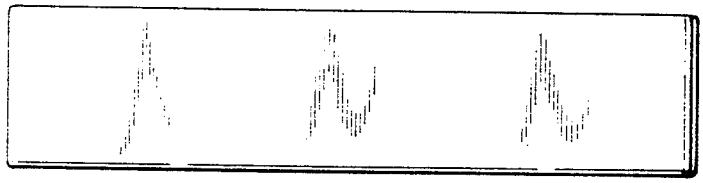

FIG. 4

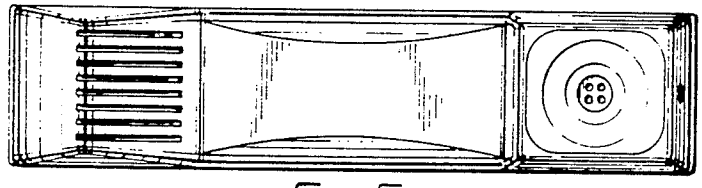

FIG. 5

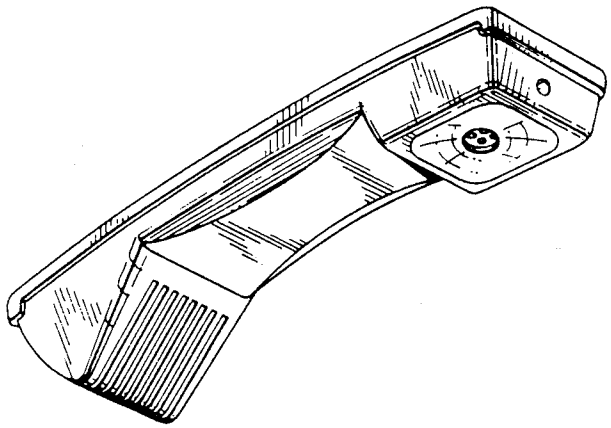

FIG. 6