Jan. 4, 1949. C. D. MILLER 2,457,829

POWER-DRIVEN HAND HACKSAW

Filed June 3, 1944

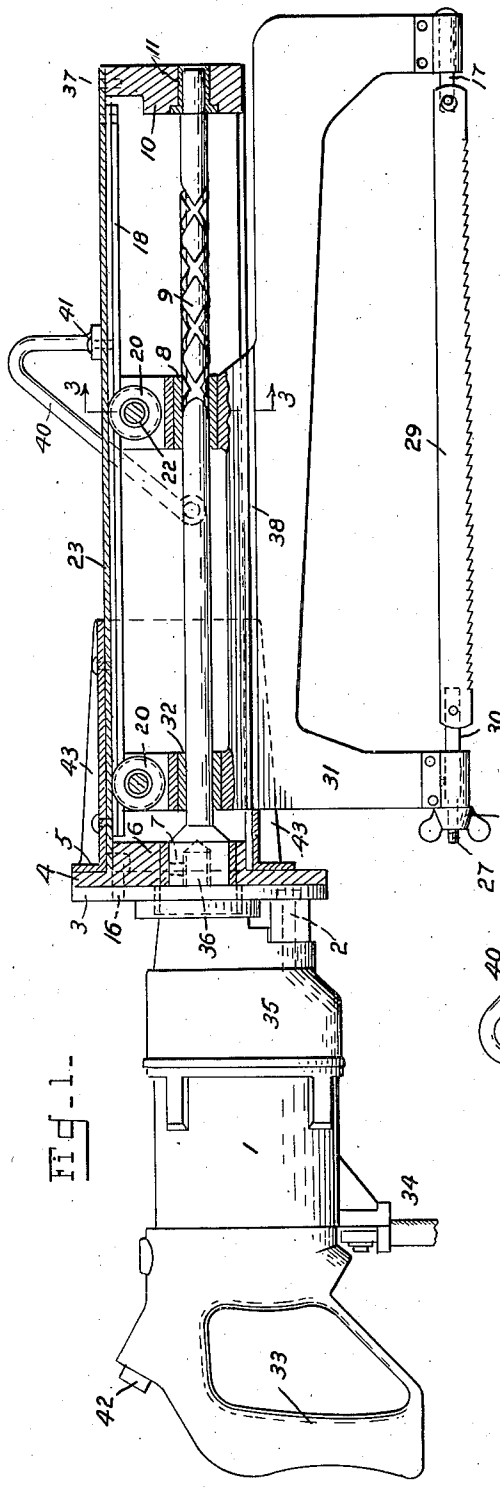

Fig-1-

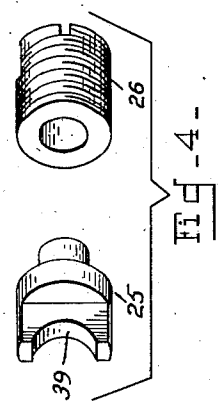

Fig-4-

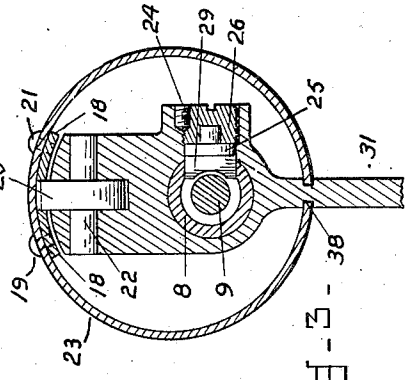

Fig-3-

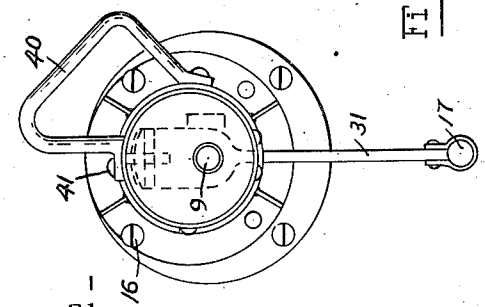

Fig-2-

Inventor

Charles D. Miller

By C. E. Herrstrom & H. E. Thibodeau

Attorneys

Patented Jan. 4, 1949

2,457,829

UNITED STATES PATENT OFFICE

2,457,829

POWER-DRIVEN HAND HACKSAW

Charles D. Miller, Davenport, Iowa

Application June 3, 1944, Serial No. 538,671

4 Claims. (Cl. 29—73)

(Granted under the act of March 3, 1883, as amended April 30, 1928; 370 O. G. 757)

1

The invention described herein may be manufactured and used by or for the Government for governmental purposes, without the payment to me of any royalty thereon.

The present invention relates generally to the art of power-driven machinery. More particularly it pertains to a small power-operated tool commonly referred to as a hacksaw, which type of tool is generally designed for manual operation.

In the normal course of operation of a machine shop or manufacturing plant there are many instances which arise in which it becomes necessary to cut off short sections of material such as steel bar stock, hollow rounds, or other elements and which operation, because of its small scale is not generally performed by conventional power-driven machinery. In the past it has been the usual practice to perform this operation manually with a hand hacksaw for, while power-driven hand hacksaws designed to cut bar stock and the like have been known prior to my invention, they have not been highly successful for various reasons including faults attributable primarily to their drive mechanism. For example, prior units have either employed a considerably restricted stroke or else have been rendered awkward and cumbersome by the incorporation of bulky parts to provide a more satisfactory stroke; also prior devices have normally not provided an even stroke as far as speed of travel during a complete traverse of the work by the operative portion of the blade is concerned. Although each of the individual operations in which it has been necessary or desirable for a workman to spend his time manipulating a hacksaw manually, when considered by itself, is of relatively unimportant scope, it is nevertheless true that taken in the aggregate such small jobs mount up over a period of time and, for example, over a year's operations will assume major importance as far as time and manpower are concerned.

It is accordingly an important object of the present invention to provide a small power-driven hacksaw which may conveniently and effectively be employed in the performance of such small jobs as cutting off the ends of bar stock or other raw materials and yet which is not so bulky that it may not be conveniently handled and transported from place to place within the shop or supply room.

It is an object of my invention to provide such a power-driven hacksaw which will materially speed up the time required for performing the operations mentioned above and which will perform the same with a minimum expenditure of effort on the part of the workman.

2

A further object of my invention is to provide a hacksaw of the type alluded to which has a stroke comparable in length to the normal stroke in manual operation.

Yet another object of the invention is to provide a power-driven hacksaw in which the speed of the stroke is substantially constant throughout its course of travel.

Another object of my invention resides in the fact that the application of power to the sawing operation may be effected by means of very slight modifications in an electric motor of conventional or standard manufacture.

It is another object of my invention to provide a guiding handle for a power-driven hand hacksaw which is adapted to be either gripped or pushed against by the operator, depending upon the circumstances of operation.

Still another object of my invention is to provide a frame structure which will be light in weight and yet sufficiently rugged to withstand the hard abuse to which shop tools of this type are generally subjected. In this same connection it is an important object to provide strong lightweight bearings for permitting easy reciprocation of the hacksaw blade and to provide a simple yet reliable mechanism for imparting the necessary reciprocatory motion to said blade.

A still further object of my invention is the provision of a hacksaw of the type mentioned in which the blade is supported and reinforced by a frame comparable to that employed in standard manually operated hacksaws while yet being driven adjacent its top so that the lower portion of the said frame and the blade are spaced substantially from the power-providing adjuncts whereby interference in operation is avoided.

It is finally an important object of my invention to provide a simple strong power-driven hand tool which may be economically manufactured from standard materials and which will lend itself to a very large variety of shop uses.

Other objects and advantages of my invention will more fully appear hereinafter from a consideration of the specification and claims, and particularly from the drawings wherein:

Fig. 1 is a side elevational view partly in section of a preferred form of apparatus embodying my invention;

Fig. 2 is a front view of the same;

Fig. 3 is a cross sectional view taken along the line 3—3 in Fig. 1; and,

Fig. 4 is a detailed isometric exploded view of a portion of the driving mechanism.

Referring now more particularly to Fig. 1 of the drawings I have illustrated a power-driven hand hacksaw having a rotary prime mover section and a reciprocating operating section. The power required for operation of the reciprocating section may be obtained from an electric motor 1 of conventional design having a hand grip 33, an electrical connecting cable 34 and a start-stop switch 42. In order to provide a suitable speed reduction I have also provided a reduction gear housing 35 formed as an integral portion of the electric motor 1 and containing suitable reduction gearing for driving the hacksaw blade. Since the specific details of the electric motor and reduction gear train form no part of my present invention I have not illustrated them in detail and they may be of any desired or conventional design. The reduction gear chamber 35 is provided at its right-hand side with a stepped flanged structure 3 which is secured thereto by means of stud bolts or socket screws 2. The right-hand face of the flanged member 3 is machined and suitably bored and drilled to be joined to another flanged section 4 by means of a plurality of socket screws 16. The flanged member 4 has secured to its right-hand portion as by means of riveting or welding a tubular shaped frame member or drive housing generally designated by the numeral 23. A ribbed bracing structure 5 having a plurality of ribs designated by reference numeral 43 is secured over a portion of the housing member 23 by means of riveting or welding and likewise is provided with a flattened base portion 5 adapted to be secured to the face of the flanged member 4 in order to provide for sufficient strength and rigidity in the housing. The flanged base members 3 and 4 are suitably bored at the center thereof to receive a stub shaft 36 extending from the reduction gear housing 35 and driven by the electric motor 1. This stub shaft 36 extends through the base plates 3 and 4 and is suitably squared or otherwise keyed in such manner as to be suitably received in positive driving relation in the internally squared or keyed end of the main driving shaft 9. A set screw 7 is provided in the hollow end of the main drive shaft 9 and bears against the stub shaft 36 in order to prevent any relative motion therebetween. A bronze bearing member 6 is provided within the central aperture of the flanged member 4 and provides a bearing surface within which the enlarged hollow end of the main drive shaft 9 may rotate. The main drive shaft 9 is also provided with a similar bronze bearing member 11 within which its reduced right-hand portion is journaled. The bearing member 11 is positioned within a flanged end plate 10 which is secured as by means of machine screws 37 within the outer or right-hand end of the main housing 23. The main drive shaft 9 is provided along the outer portion of its length with an endless female thread for a purpose which will hereinafter be apparent.

Referring again to Fig. 1, it will be noted that I have provided a blade carrying frame 31 of steel or other suitable material which is formed and dimensioned in such manner that a standard hacksaw blade may be secured within the arms thereof. For this purpose I have provided brackets at the extremities of the two lower arms of said frame, said brackets carrying bolt and pin assemblies which are adapted to be engaged within the ends of the hacksaw blade. The bolt 17 at the right-hand end of the frame is freely slidable within its bracket, but is of course limited in its movement as tension is applied at the other end of the blade by means of the threaded bolt 27 and its associated wing nut 28 in a manner well understood in the art. The blade carrying frame 31 is provided with a pair of upwardly extending arms which are adapted to extend within the main housing 23 and are suitably apertured to receive the necessary bearings for operation therein. These upwardly extending arms are each provided at their extreme top portions with a roller bearing designated by the numeral 20, having an axle 22 and adapted to operate within a groove or trackway formed by two guiding members 18 which are secured to the inside of housing 23 as by means of conventional machine screws 19 and 21. The frame member 31 is also constrained to longitudinal movement by virtue of a structure which is more clearly illustrated in Fig. 3. As illustrated in that figure the main frame 31 is provided with longitudinal grooves on each side thereof as indicated by reference numeral 38, which grooves are adapted to engage the sides of another groove formed along the bottom portion of the main housing 23. The effect of this assembly is thus to prevent any downward or outward movement of the main frame 31 and its associated mechanism from within the housing 23. It will be noted that in the normal operation of this apparatus the reaction which will naturally occur from pressing the blade against a piece of material to be sawed will be such as to apply a force upwardly against the top portion of the housing 23, which force will of course be taken care of by the roller bearings 20.

Referring again to Fig. 1, it will be noted that suitable bearings 8 and 32 are provided within the upwardly extending arms of the frame 31 within which bearings is journaled the main driving shaft 9. The purpose of the structure which has been thus far described is to provide a guiding and bearing structure to accommodate the reciprocatory motion of the hacksaw blade which is carried within the main frame 31. The means of imparting this reciprocatory motion to the hacksaw blade will now be described.

As set forth above, the main driving shaft 9 is provided towards its outer end with an endless thread. Such a grooved endless thread has been known previously as a mechanism capable of converting a continuous rotational movement in a single direction into a reciprocatory or back and forth motion in opposite directions. In other words, if an external member is applied around the shaft 9 having a projecting portion depending within the grooved portion of said shaft and the shaft is continuously rotated, it is only necessary to prevent rotation of the external member in order to impart thereto a continuous reciprocatory motion. This has been accomplished by applicant in the manner illustrated more clearly in Fig. 3. As illustrated in the latter figure, the outer upwardly extending arm of the main frame 31 is provided with an embossed portion on its right-hand side. This embossed portion is drilled so that the axis of its bore intersects at right angles the axis of the main drive shaft 9. The bronze bearing member 8 is also cut away at this point to provide for the insertion therein of a stud 25 swivelled within a base member 26 and having a projecting portion 39 suitably contoured to fit into the grooves in the main drive shaft 9. The base member 26 is secured in position within the embossed portion by means of a suitable set screw 24. The exact design of this swivel member 25 having its follower portion 39

is most clearly illustrated in the detailed Fig. 4.

Referring now to Figs. 1 and 2 of the drawings, I have illustrated a guiding handle 40 which forms an important part of my present invention. This guiding handle is adapted to be formed of a single piece of either solid or hollow bar stock suitably bent and having its ends flattened and turned in the manner illustrated in order that it may be secured to the outside of the housing 23 as by means of suitable machine screws 41. This handle has been designed in the specific manner illustrated for a very definite purpose. It is the known custom of certain persons commonly engaged in such tasks as are adapted to be performed by my tool to use the palm of one hand to rest against the outer top portion of a hacksaw frame while they are engaged in using the same. At the same time, it is also known that certain other persons follow the practice of grasping the outer portion of the frame using the hand and fingers for this purpose. It will thus be clear that I have provided a bracket or handle which is so shaped that it may be employed in either manner and is thus adapted for the use of any individual regardless of his practice in this regard.

The operation of the device is as follows: The operator may for example grasp the assembly by taking hold of the handle 33 with his right hand and of the handle 40 with his left hand. Operation of the starting switch 42 causes the electric motor 1 through the reduction gear train contained within housing 35 and the stub driving shaft 36 to apply a rotational force to the main driving shaft 9. The rotational force applied to the main driving shaft 9 is converted into a reciprocatory motion of the frame 31 by means of the engagement of the follower portion 39 of the swivel member 25 within the endless thread formed in the outer portion of the main drive shaft 9. The length of stroke of the hacksaw blade is determined by the length of the endless thread. As the reciprocating hacksaw blade is pressed against the surface of a piece of material to be cut, the roller bearings 20, reacting against the main housing 23, will absorb the upward reaction from the blade. The friction due to the reciprocatory motion of the frame 31 is absorbed in part by the bearings 8 and 32 which slide along the outside of the rotating main drive shaft 9. The rotational friction of the main drive shaft 9 will be largely absorbed by the end bearings 6 and 11 within which it is journaled. During the cutting operation the operator may prefer to hold the assembly merely by means of grasping the handle 33 and using the handle 40 as an abutment against which the palm of the left hand may be presesd in order to guide and force the saw into the work. The tool may be conveniently plugged into any suitable electrical outlet by means of the cable 34 and may be turned on and off at will by means of the switch 42. Also the saw blades may be quite readily changed in a conventional manner.

An additional attribute or merit of my device in its preferred form is the fact that it may be employed for manual operation, as well as being power-driven. Very frequently it is desirable to start a cut by manually drawing the blade over the work a plurality of times in order to locate it at exactly the desired point and my saw will function in this capacity without driving the motor in reverse, thus permitting the blade to move. If any difficulty be experienced in preventing independent blade movement and accompanying reverse driving of the device, the same may be remedied by providing a slightly high friction area at a point along the spiral groove, such, for example, as at one of the junctures at which the said groove reverses its direction. With such construction the blade also tends to normally halt in the same position each time that the prime mover is stopped. My theory concerning the manner in which reverse driving of the motor is positively prevented when high friction area is provided at one of the turning points of the spiral groove is that when a follower such as the type illustrated in the drawing (numeral 39) is employed, it is brought to a halt in said high friction area in a position extending substantially transversely of the power shaft 9 in the returning bend of the thread groove so that it in effect is in a "dead center" position. I do not, however, wish to, in any sense, be limited by this theory, since it is conceivable that I am in error therein and the fact remains that regardless of the reason my saw functions in the manner indicated.

While I have illustrated and described a preferred embodiment of my invention in the present drawings and specification, it is to be clearly understood that various modifications, deviations, and departures may occur to one skilled in the art and I accordingly do not intend my invention to be limited to the specific embodiment disclosed but only in accordance with the following claims.

I claim:

1. A power-driven hand hacksaw comprising a prime mover, a tubular elongated housing, a drive shaft rotatably mounted in said housing and having on its periphery spirally extending guide structure doubled back on itself to provide an endless and returning guide, means operatively connecting said drive shaft to said prime mover, a frame for mounting a saw blade or the like, a hanger member projecting from the general top portion of said frame and extending into said housing through a narrow slit in the latter, a bearing on said hanger rotatably receiving said drive shaft, a swivelly mounted follow member supported by said hanger and adapted to travel to and fro in engagement with said guide of the drive shaft as the latter is rotated whereby said frame is propelled along a reciprocatory path, a low friction means on said hanger member riding in engagement with the inner surface of said housing for transmitting to said housing thrust applied to said frame during the operation of the said hacksaw, flange means for attaching said tubular elongated housing to the said prime mover, and structure for reinforcing said housing adjacent said flange means comprising an elongated tubular section receiving a portion of said housing and having flange structure adjacent one end abutting said first flange means and a plurality of rib members extending longitudinally of itself outwardly from its said flange.

2. A power-driven hand hacksaw comprising a prime mover, an elongated tubular housing, a drive shaft rotatably mounted in said housing and having on its periphery spirally extending guide structure doubled back on itself to provide an endless and returning guide, means operatively connecting said drive shaft to said prime mover, a frame for mounting a saw blade or the like, a hanger member projecting from the general top portion of said frame and extending into said housing through a narrow slit in the latter, a bearing on said hanger rotatably receiving said drive shaft, a swivelly mounted follow member supported by said hanger and adapted to travel to and fro in engagement with said guide of the

drive shaft as the latter is rotated whereby said frame is propelled along a reciprocatory path, a low friction means on said hanger member riding in engagement with the inner surface of said housing for transmitting to said housing thrust applied to said frame during the operation of the said hacksaw, and a handle member comprising a connecting section, an arm projecting from one end of said connecting section and generally normal thereto but having its extended end spaced laterally of said connecting section to one side, another arm projecting from the other end of said connecting section at an angle less than 90° and having its extending end disposed laterally of said connecting section to the other side, and angularly disposed fastening lugs on the extended ends of said arms, said handle being mounted upon the said elongated tubular housing in a manner such that the fastening lug of said first arm is disposed generally to one side of the housing and the fastening lug on the other said arm is disposed adjacent the top of the housing and further removed from the prime mover than is said first fastening lug.

3. In a power-driven hand hacksaw, an elongated tubular housing having a slit extending at least a substantial distance along its length, a drive shaft rotatably mounted in said housing and having on its periphery spirally extending guide structure doubled back on itself to provide an endless and returning guide, a frame for mounting a saw blade or the like, a plurality of spaced apart hanger members projecting from the general top portion of said frame and extending into said housing through the slit therein, a bearing on each of said hangers rotatably receiving said drive shaft, anti-friction means of each of said hangers riding in engagement with the inner surface of said housing for transmitting to said housing thrust applied to said frame during operation of said hacksaw, and a swivelly mounted follow member supported by one of said hanger members adapted to travel to and fro in engagement with said guide of the drive shaft as the latter is rotated.

4. A power-driven hand hacksaw comprising a prime mover, an elongated tubular housing, a drive shaft rotatably mounted in said housing and having on its periphery spirally extending guide structure doubled back on itself to provide an endless and returning guide, means operatively connecting said drive shaft to said prime mover, a frame for mounting a saw blade or the like, a hanger member projecting from the general top portion of said frame and extending into said housing through a narrow slit in the latter, a bearing on said hanger rotatably receiving said drive shaft, a swivelly mounted follow member supported by said hanger and adapted to travel to and fro in engagement with said guide of the drive shaft as the latter is rotated, whereby said frame is propelled along a reciprocatory path, a low friction means on said hanger member riding in engagement with the inner surface of said housing for transmitting to said housing thrust applied to said frame during the operation of the said hacksaw, and a handle member comprising a connecting section, an arm projecting from one end of said connecting section having its extended end spaced laterally of said connecting section to one side, another arm projecting from the other end of said connecting section and having its extending end disposed laterally of said connecting section to the other side, and angularly disposed fastening lugs on the extended ends of said arms, said handle being mounted upon the said elongated tubular housing in a manner such that the fastening lug of said first arm is disposed generally to one side of the housing and the fastening lug on the other said arm is disposed adjacent the top of the housing and further removed from the prime mover than is said first fastening lug.

CHARLES D. MILLER.

REFERENCES CITED

The following references are of record in the file of this patent:

UNITED STATES PATENTS

Number	Name	Date
158,932	Gilbert	Jan. 19, 1875
404,017	Robinson	May 28, 1889
436,804	Roberts	Sept. 23, 1890
699,995	Whitney	May 13, 1902
924,509	Taylor	June 8, 1909
1,645,646	Gray	Oct. 18, 1927
1,763,500	Bowen	June 10, 1930
1,830,580	Wappat	Nov. 3, 1931
1,919,323	Blum	July 25, 1933
1,993,797	Peterson	Mar. 12, 1935
2,329,729	Saucke	Sept. 21, 1943
2,330,618	Plumb	Sept. 28, 1943

FOREIGN PATENTS

Number	Country	Date
100,137	Sweden	Oct. 29, 1940