C. B. WHITE.

SPARK PLUG.

APPLICATION FILED NOV. 5, 1919.

1,405,701. Patented Feb. 7, 1922.

Fig. 1.

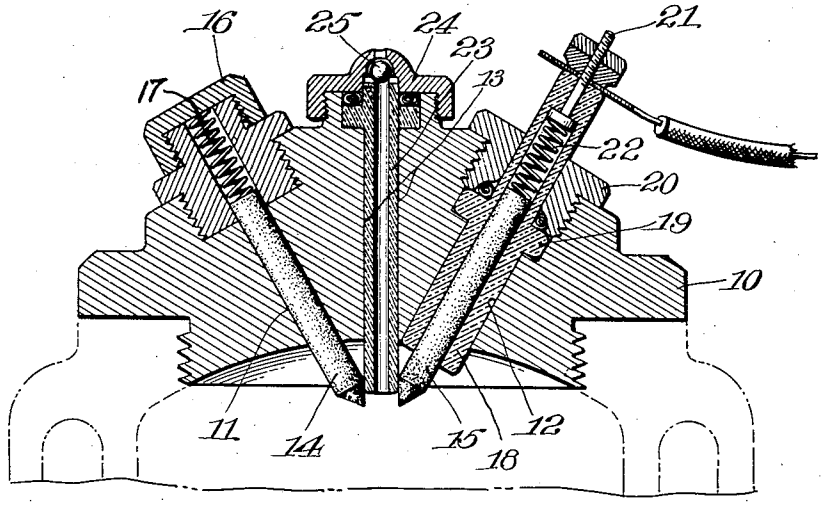

Fig. 2.

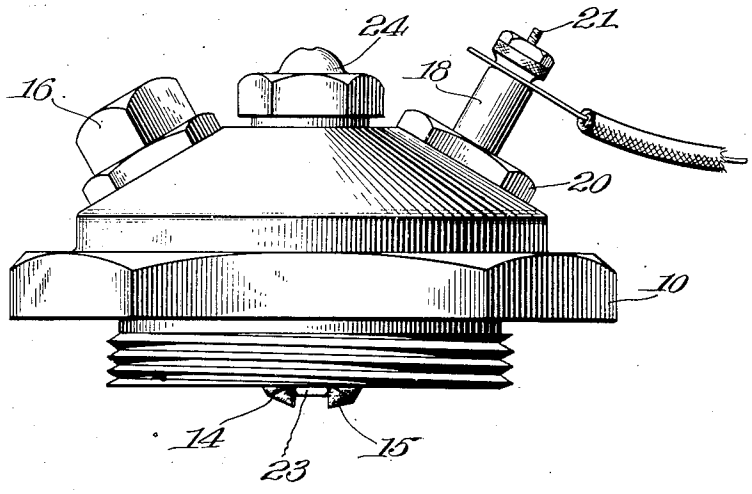

Inventor

Clyde B. White.

Witness:

P. J. Gathmann

By Harold C. Thome

Attorney

UNITED STATES PATENT OFFICE.

CLYDE B. WHITE, OF BUFFALO, NEW YORK.

SPARK PLUG.

1,405,701. Specification of Letters Patent. Patented Feb. 7, 1922.

Application filed November 5, 1919. Serial No. 335,925.

To all whom it may concern:

Be it known that I, CLYDE B. WHITE, a citizen of the United States, residing at Buffalo, in the county of Erie and State of New York, have invented certain new and useful Improvements in Spark Plugs, of which the following is a specification.

This invention relates to ignition devices for internal combustion engines. It embodies electrodes of carbon or like substances with mechanism for holding them in proper position with respect to each other and also with means for clearing the gap between the electrodes on each intake stroke of the engine.

An object of the invention is to provide a device which will increase the efficiency of the ignition of the fuel within the cylinders of engines in which it is installed.

Another object of the invention is to provide novel means for holding the electrodes in proper relation with each other and in case an electrode is employed which will burn away, to provide means for feeding it down and keeping the electrodes in proper relation with each other.

A further object of the invention is to provide a passage for air to be drawn into the engine cylinder through the device and between the electrodes.

Further objects and details of the invention will appear as described in connection with the accompanying drawings, and hereafter set forth and claimed.

Referring to the drawings, forming part of this specification like numerals designate corresponding parts in the two figures in which,

Figure 1. is a cross-sectional view taken through the elements of my device, and

Figure 2. is an elevation of the same.

In the drawings the reference numeral 10. designates the screw plug employed in my invention. Extending through the plugs are cylindrical passages 11. 12. and 13. to provide for the electrodes 14. and 15. which are composed of carbon or similar material, and insulating tube 18. as will be more fully described.

The passage 11. is enlarged and internally screw threaded at its upper end to receive a plug 16. which forms an abutment for a spring 17. mounted within the plug and adapted to press the electrode 14. down through the passage 11.

It is essential that passage 12. be made a larger diameter than passage 11. since the electrode 15. mounted within this passage must be insulated and for this purpose I employ a tube 18. of insulating material, such as porcelain. This tube 18. is formed with an enlargement 19. adapted to rest against the bottom of the enlarged portion of the passage 12. and a bushing 20. screwed into the passage fastens the tube 18. in place. Passing through the upper end of the porcelain tube 18. is a binding screw 21. with the usual form of nut and lock nut. This binding screw forms an abutment for spring 22. which presses the electrode 15. down through the tube 18. in the same manner as electrode 14. is pressed down. It is, of course, understood that if it is desirable to have both electrodes insulated the passage 11. can be provided with a similar insulating tube the same as passage 12.

A tube 23. of insulating material which may be porcelain or the like is held in the passage 13. by a cap 24. which engages an extension in the form of a nipple on the plug 10. It will be seen that by forming this tube 23. of the proper diameter and sufficient length it will form an abutment for the electrodes 14. and 15. and thus maintain them in proper relation with each other. The cap 24. is provided with an aperture and check valve 25. in line with the axis of the tube 23. which operates to open and admit air on the suction stroke in the cylinder and closing on compression stroke, thus providing for a current of air for cooling and clearing the gap between the electrodes.

In practice I have found that carbon or a pressed composition including carbon or like substance as an ingredient formed into rods such as used for commutator brushes, arc-light electrodes and the like, make the most efficient electrodes for spark plugs, causing a hotter spark or flame within the cylinders thereby increasing the ignition of the fuel ignition. It will, of course, be understood that it is within the scope of my invention to employ only one of such electrodes and a metallic electrode is desired. Therefore the terms "carbon" and "pressed composition" as employed in the claims shall include as a class such compositions as are used for arc-electrodes.

It will be understood that the form of construction shown in the drawings and described herein which set forth the invention, may be greatly varied, and I do not wish to

limit myslf to the specific construction as described in the specification for it is obvious that various changes in the details may be resorted to without departing from the spirit and scope of the invention as set forth and claimed as follows:—

I claim:

1. A spark plug for internal combustion engines embodying a pair of movable spring-pressed electrodes arranged to project toward each other.

2. A spark plug for internal combustion engines embodying an insulating tube for carrying an electrode, an electrode slidably mounted within said tube, means for causing the electrode to project from the tube, and means extending from the plug for limiting the extent the electrode can project.

3. A spark plug for internal combustion engines embodying a plug having two movable electrodes projecting toward each other and at least one of which is insulated from the plug, and means for causing the electrodes to feed toward each other.

4. A spark plug for internal combustion engines embodying a plug having two movable electrodes projecting toward each other and at least one of which is insulated from the plug, means for causing the electrodes to feed toward each other, and an abutment of insulating material for the adjacent ends of said electrodes.

5. A spark plug for internal combustion engines embodying a plug having cylindrical passages, two slidably movable electrodes mounted within said passages, an insulating tube surrounding one of said electrodes and positioned within one of said passages, and means for causing said electrodes to project from said passages and toward each other.

6. A spark plug for internal combustion engines embodying a plug having cylindrical passages, two slightly movable electrodes mounted within said passages, an insulating tube surrounding one of said electrodes and positioned within one of said passages, means for causing said electrodes to project from said passages and toward each other, and an insulating tube extending through a third opening in said plug between said first passages and adapted to limit the extent to which said electrodes project.

7. A spark plug for internal combustion engines embodying a plug having two movable electrodes projecting therefrom and toward each other, and a tube of insulating material extending through said plug and between the electrodes adapted to form an abutment for the electrodes and a passage to admit a current of air through the plug.

8. A spark plug for internal combustion engines embodying a plug having three cylindrical passages having their axes in a common plane and intersecting below the end of the plug, an insulating tube in one of the outer passages, a binding post mounted on the upper end of said tube, carbon electrodes positioned, one within said tube and the other within the other outer passage, springs arranged at the remote ends of said electrodes adapted to project them toward each other, and an insulating tube in the middle passage extending therethrough and between said electrodes and adapted to form a fixed abutment for their projecting ends.

9. A spark plug for internal combustion engines embodying a plurality of electrodes all of which are composed of carbon and an insulating abutment adjacent the arcing ends of the electrodes.

10. A spark plug for internal combustion engines embodying a plurality of electrodes all of which are composed of a pressed composition formed into rods, and an insulating abutment adjacent the arcing ends of the electrodes.

11. A spark plug for internal combustion engines embodying a pair of electrodes arranged to project obliquely toward each other, and an insulating abutment on the plug and between the arcing ends of the electrodes.

In testimony whereof I affix my signature.

CLYDE B. WHITE.