(No Model.)

A. GRAINGER.

NAILLESS HORSESHOE.

No. 456,487. Patented July 21, 1891.

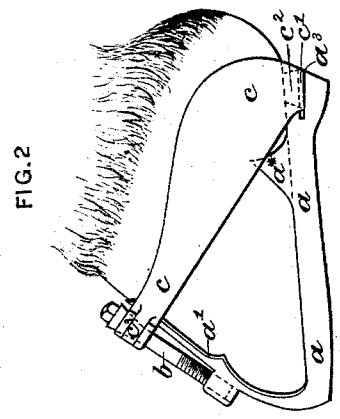

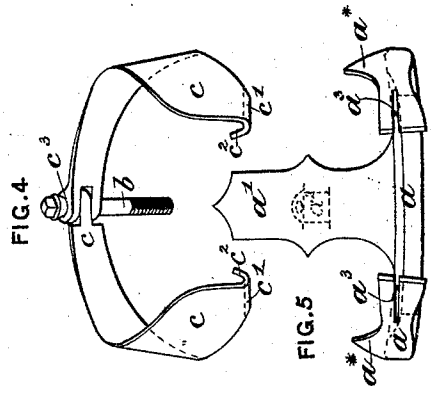

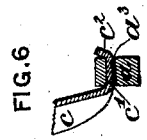

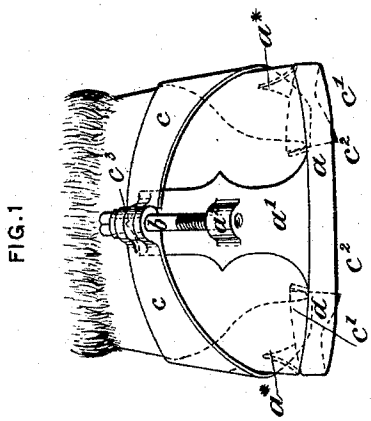

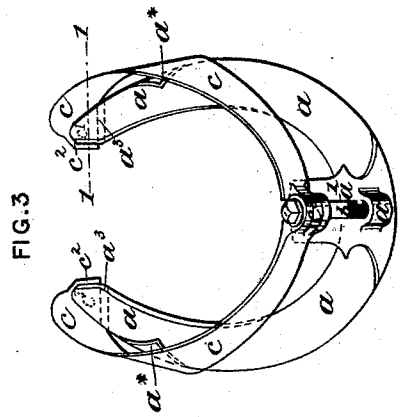

Attest.
E. Arthur
S. H. Knight

Inventor.
Alfred Grainger.
By Knight Bros.
Attys.

THE NORRIS PETERS CO., PHOTO-LITHO., WASHINGTON, D. C.

UNITED STATES PATENT OFFICE.

ALFRED GRAINGER, OF LONDON, ENGLAND.

NAILLESS HORSESHOE.

SPECIFICATION forming part of Letters Patent No. 456,487, dated July 21, 1891.

Application filed March 18, 1890. Renewed May 26, 1891. Serial No. 394,096. (No model.)

To all whom it may concern:

Be it known that I, ALFRED GRAINGER, architect, a subject of the Queen of Great Britain, residing at London, Upper Mitcham, in the county of Surrey, England, have invented certain new and useful Improvements in Nailless Horseshoes; and I do hereby declare that the following is a full, clear, and exact description of the invention, which will enable others skilled in the art to which it appertains to make and use the same.

The invention has for its object improvements in nailless horseshoes, and relates to a simple and effective construction whereby the shoe is readily and securely fixed on the hoof and is as readily removed therefrom.

In carrying my invention into effect I make the shoe proper of the ordinary form, except that I construct it with a toe-cap of greater upward extension than usual and provide such toe-cap with a lump or projection tapped to receive a screw, as hereinafter described, in addition to which I form the heels of the shoe forked or slotted in a horizontal direction for the purpose hereinafter named. I also preferably form the shoe with side clips. In connection with such a shoe I employ a band or clip which encircles the hoof, the front of which band or clip is placed more or less near the upper part of the hoof, from which point it passes backward in a downward direction to the heels, where it is formed with horizontal inturned webs or lugs to fit into the forked or slotted heels of the shoe, such webs or lugs having each a flange on the inner edge to prevent their springing out of the slots or forks at the heels of the shoe. I also form the shoe-heels and the interfitting parts of the band or clip somewhat tapered or wedge-shaped to enable the heels of the band or clip to be readily placed in position in the slotted heels of the shoe. The front of the band or clip has a lump or enlargement thereon, which is perforated for the passage therethrough of the screw hereinbefore referred to, which screws into the before-mentioned lump or projection on the toe-cap of the shoe while the head of such screw takes a bearing in or on the top of the lump or projection on the band or clip. The band or clip rests in front on the toe-cap, and it is comparatively narrow at such part and gradually widens to the heels in order to obtain a larger bearing-surface at such parts of the hoof. In order to facilitate the application and removal of the clip, the latter may be formed in two parts, connected together by means of a hinge-formed joint, forming the before-mentioned lump or projection.

In order that my said invention may be more clearly understood and readily carried into effect, I will proceed, aided by the accompanying drawings, more fully to describe the same.

In the drawings, Figure 1 is a front view, and Fig. 2 is a side view, of a nailless horseshoe constructed according to my invention and represented as it would appear when fixed on a horse's hoof. Fig. 3 is a plan of the same, but shown apart from the hoof. Fig. 4 is a rear view of the band or clip and fixing-screw separately. Fig. 5 is a rear view of the shoe separately, and Fig. 6 is a section on the line 1 1 of Fig. 3.

a is the shoe proper, which may be made of any ordinary or suitable form, except that I construct it with a toe-cap *a'* of greater upward extension than usual and provide such toe-cap with a lump or projection a^2, tapped to receive a screw *b*. I also form it with side clips a^*, in addition to which I form horizontal slots a^3 in the heels. In connection with such a shoe I employ a thin metallic band or clip *c*, which encircles the hoof, the front of which band or clip *c* is, when in position, more or less near the upper part of the hoof, from which point it passes backward in a downward direction to the heels, where it is formed with horizontal inturned webs or lugs *c'* to fit into the spaces a^3 of the forked or slotted heels of the shoe, such webs or lugs *c'* having each a flange c^2 on the inner edge to prevent their springing out of the slots or spaces a^3 at the heels of the shoe *a*, and they are formed by bending the rear end of each section of the clip *c* inward, horizontally, and then upward. I also form the shoe-heels and the interfitting parts of the rear or heels of the band or clip *c* tapered or wedge-shaped, as will be seen on reference to Fig. 3, to enable the heels of the band or clip *c* to be readily placed in position in the slots or spaces a^3 in the heels of the shoe. The band or clip *c* is preferably made in two parts jointed to-

gether like a hinge, and the front thereof has a lump or enlargement c^3, forming the hinge-like joint, which is perforated for the passage therethrough of the screw b, which latter screws into the tapped lump or projection a^2 on the toe-cap a' of the shoe, while the head of such screw b takes a bearing in or on the lump or enlargement c^3. The band or clip c rests in front, preferably on the toe-cap a', and it is comparatively narrow at such part, but gradually widens toward the heels in order to obtain a larger bearing-surface at such parts of the hoof. By turning the screw b in one direction the band or clip c is made more or less to approach the shoe a, thereby firmly clipping it onto the hoof, while by turning the screw in the contrary direction the band or clip c and the shoe may be separated from each other and from the hoof. If desired, a binding-screw b may be used at or toward each side of the shoe and clip instead of employing only one in the center of the front of the hoof, as shown in the drawings, in which case the extended central toe-cap will be dispensed with and other caps will be placed in suitable position to receive such screws.

Having fully described my invention, what I desire to claim and secure by Letters Patent is—

The combination of the shoe having an elongated toe-cap and horizontal slots in its heels, a clip having a perforated lug in front and its rear ends being bent inward horizontally, so as to form the webs c', and then turned upward to form the flanges c^2, said webs being adapted to be inserted in said slots, and a screw passing through said lug and connecting the clip with the toe-cap, substantially as set forth.

ALFRED GRAINGER.

Witnesses:
B. J. B. MILLS,
CLAUDE K. MILLS,
Both of 23 *Southampton Buildings.*