(12) INTERNATIONAL APPLICATION PUBLISHED UNDER THE PATENT COOPERATION TREATY (PCT)

(19) World Intellectual Property Organization
International Bureau

(43) International Publication Date
12 January 2012 (12.01.2012)

PCT

(10) International Publication Number
WO 2012/005889 A1

(51) International Patent Classification:
E21B 43/38 (2006.01)

(21) International Application Number:
PCT/US201 1/040325

(22) International Filing Date:
14 June 201 1 (14.06.201 1)

(25) Filing Language: English

(26) Publication Language: English

(30) Priority Data:
61/359,875 30 June 2010 (30.06.2010) US

(71) Applicant *(for CA only):* **SCHLUMBERGER CANADA LIMITED** [CA/CA]; 525-3rd Avenue Southwest, Calgary, Alberta T2P 0G4 (CA).

(71) Applicant *(for FR only):* **SERVICES PETROLIERS SCHLUMBERGER** [FR/FR]; 42 rue Saint Dominique, F-75007 Paris (FR).

(71) Applicant *(for GB, JP, NL only):* **SCHLUMBERGER HOLDINGS LIMITED** [GB/GB]; P.O. Box 71, Craigmuir Chambers, Road Town, Tortola, 1110 (VG).

(71) Applicant *(for AL, AM, AU, AZ, BF, BG, BJ, BY, CF, CG, CI, CM, CO, CZ, DE, DK GA, GN, GQ, GR, GW, HU, ID, IE, IL, IT, KG, KP, KR, KZ, LT, MD, ML, MR, MX, MY, NE, NO, NZ, OM, PL, RO, RU, SI, SK, SN, TD, TG, TH, TJ, TM, TN, TR, TT, UZ, ZA only):* **SCHLUMBERGER TECHNOLOGY B.V.** [NL/NL]; Parkstraat 83-89, NL-25 14 JG The Hague (NL).

(71) Applicant *(for all designated States except AM, AU, AZ, BF, BG, BJ, BY, CA, CF, CG, CI, CM, CO, CZ, DE, DK,*

[Continued on next page]

(54) Title: DOWNHOLE OIL-WATER-SOLIDS SEPARATION

(57) Abstract: A technique facilitates separating fluids and solids and handling the separated solids downhole. A separator system is provided with a separator having a well fluid inlet, an oil stream passage, a water stream passage, and a solids passage. The separator operates to separate well fluid into substantially oil, water, and solids components and those components are directed to the corresponding passages. A flow restrictor may be used in cooperation with the separator to facilitate separation of the well fluid components.

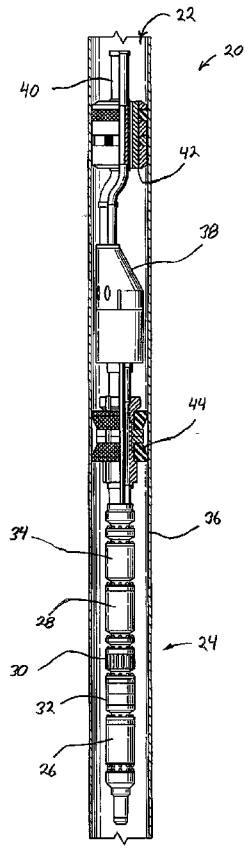

FIG .1

WO 2012/005889 A1

FR, GA, GB, GN, GQ, GR, GW, HU, ID, IE, IL, IT, JP, KG, KP, KR, KZ, LT, MD, ML, MR, MX, MY, NE, NL, NO, NZ, OM, PL, RO, RU, SI, SK, SN, TD, TG, TH, TJ, TM, TN TR, TT, US, UZ, ZA): **PRAD RESEARCH AND DEVELOPMENT LIMITED** [GB/GB]; P.O. Box 71, Craigmuir Chambers, Road Town, Tortola, 1110 (VG).

(71) Applicant *(for IS only):* **SCHLUMBERGER TECH¬ NOLOGY CORPORATION** [US/US]; 300 Schlumberger Drive, Sugar Land, TX 77478 (US).

(72) Inventors; and

(75) Inventors/Applicants *(for US only):* **COX, Ryan** [CA/US]; 8110 Highland Ridge Court, Sugar Land, Texas 77479 (US). **DORMAK, Steven** [US/US]; 5810 Charlie Meyer Road, Mhape, Damon, Texas 77430 (US).

(74) Agents: CLARK, Brandon S. et al; Schlumberger Technology Corporation, 14910 Airline Road, Legal - IP, Building 14, Rosharon, Texas 77583 (US).

(81) Designated States *(unless otherwise indicated, for every kind of national protection available):* AE, AG, AL, AM, AO, AT, AU, AZ, BA, BB, BG, BH, BR, BW, BY, BZ, CA, CH, CL, CN, CO, CR, CU, CZ, DE, DK, DM, DO, DZ, EC, EE, EG, ES, FI, GB, GD, GE, GH, GM, GT, HN, HR, HU, ID, IL, IN, IS, JP, KE, KG, KM, KN, KP, KR, KZ, LA, LC, LK, LR, LS, LT, LU, LY, MA, MD, ME, MG, MK, MN, MW, MX, MY, MZ, NA, NG, NI, NO, NZ, OM, PE, PG, PH, PL, PT, RO, RS, RU, SC, SD, SE, SG, SK, SL, SM, ST, SV, SY, TH, TJ, TM, TN, TR, TT, TZ, UA, UG, US, UZ, VC, VN, ZA, ZM, ZW.

(84) Designated States *(unless otherwise indicated, for every kind of regional protection available):* ARIPO (BW, GH, GM, KE, LR, LS, MW, MZ, NA, SD, SL, SZ, TZ, UG, ZM, ZW), Eurasian (AM, AZ, BY, KG, KZ, MD, RU, TJ, TM), European (AL, AT, BE, BG, CH, CY, CZ, DE, DK, EE, ES, FI, FR, GB, GR, HR, HU, IE, IS, IT, LT, LU, LV, MC, MK, MT, NL, NO, PL, PT, RO, RS, SE, SI, SK, SM, TR), OAPI (BF, BJ, CF, CG, CI, CM, GA, GN, GQ, GW, ML, MR, NE, SN, TD, TG).

Published:

— *with international search report (Art. 21(3))*

— *before the expiration of the time limit for amending the claims and to be republished in the event of receipt of amendments (Rule 48.2(h))*

DOWNHOLE OIL-WATER-SOLIDS SEPARATION

CROSS-REFERENCE TO RELATED APPLICATION

[0001] The present document is based on and claims priority to U.S. Provisional Application Serial No.: 61/359,875, filed June 30, 2010 and incorporated by reference herein.

BACKGROUND

[0002] Oil well production can involve pumping a well fluid as part oil and part water, i.e. an oil/water mixture. As an oil well becomes depleted of oil, a greater percentage of water is present and subsequently produced to the surface. The "produced" water can sometimes account for more than 80% of total produced well fluid volume, thus creating significant operational issues. For example, the produced water may require treatment and/or reinjection into a subterranean reservoir to dispose of the water and to help maintain reservoir pressure. Treating and disposing of produced water can be expensive.

[0003] One way to address these issues is through employment of a downhole device to separate oil and water and to re-inject the separated water, thereby minimizing production of unwanted water to the surface. Reducing water produced to the surface can allow for a reduction of required power, a reduction of hydraulic losses, and a simplification of surface equipment. Furthermore, many of the costs associated with water treatment are reduced or eliminated.

[0004] However, successfully separating oil and water downhole and then re-injecting water is a relatively involved and sensitive process with many variables and factors that affect the efficiency and feasibility of such an operation. For example, the oil/water ratio can vary from well to well and can change significantly over the life of the

well. The required injection pressure also can change over the life of the well. For example, the required injection pressure for the separated water tends to increase over time.

[0005] Additional issues arise when the well fluid includes solids, such as sand and other particulates which are sometimes mixed in with the well fluid. The solids tend to be heavier than the oil and separate out with the water. However, the presence of solids in the water stream can create complications downhole, such as clogging. In some applications, the solids separate from the reinjected water stream and tend to clog the reinjection locations. The ratio of solids in the well fluid/water also can change over time which creates greater difficulties in handling the solids downhole.

SUMMARY

[0006] In general, aspects of downhole oil-water-solids separation provide a system and method for separating fluids and solids and for handling the separated solids downhole. The technique utilizes a separator system having a separator with a well fluid inlet, an oil stream outlet passage, a water stream outlet passage, and a solids outlet passage. The separator operates to separate well fluid into substantially oil, water, and solids components and those components are directed to the corresponding passages. A flow restrictor may be used in cooperation with the separator to facilitate separation of the well fluid components.

BRIEF DESCRIPTION OF THE DRAWINGS

[0007] Certain embodiments of downhole oil-water-solids separation will hereafter be described with reference to the accompanying drawings, wherein like reference numerals denote like elements, and:

[0008] Figure 1 is a front elevation view of a well system utilizing an electric submersible pumping system in cooperation with a separator system, according to an embodiment;

[0009] Figure 2 is a cross-sectional view of one example of a separator system, according to an embodiment;

[0010] Figure 3 is a cross-sectional view of a portion of the well system illustrating one example of a flow restrictor, according to an embodiment;

[0011] Figure 4 is a cross-sectional view similar to that of Figure 3 but showing the flow restrictor removed from the portion of the well system, according to embodiment;

[0012] Figure 5 is a front elevation view of an alternate example of a well system combined with a separator system, according to an alternate embodiment;

[0013] Figure 6 is a cross-sectional view of one example of a redirector that can be used with a well system, according to embodiment;

[0014] Figure 7 is a cross-sectional view of a redirector combined with a flow restrictor for use in the well system, according to an embodiment;

[0015] Figure 8 is a cross-sectional view of an example of a flow restrictor system that may be utilized with the well system, according to an embodiment;

[0016] Figure 9 is a cross-sectional view of a flow restrictor system incorporating a sensor or sensors, according to embodiment; and

[0017] Figure 10 is a cross-sectional view of another example of a separator system in which the well fluid is separated into three components which primarily comprise oil, water, and solids, respectively, according to an embodiment.

DETAILED DESCRIPTION

[0018] In the following description, numerous details are set forth to provide an understanding of the present invention. However, it will be understood by those of ordinary skill in the art that the present invention may be practiced without these details and that numerous variations or modifications from the described embodiments may be possible.

[0019] In the specification and appended claims: the terms "up" and "down", "upper" and "lower", "upwardly" and "downwardly", "upstream" and "downstream"; "above" and "below"; and other like terms indicating relative positions above or below a given point or element are used in this description to more clearly describe some embodiments of the invention. However, when applied to equipment and methods for use in wells that are deviated or horizontal, such terms may refer to a left to right, right to left, or other relationships as appropriate.

[0020] Embodiments described herein generally relate to artificial lift systems, e.g. artificial lift systems in connection with hydrocarbon wells. The embodiments comprise systems and methods for separating well fluid components, such as oil, water and solids. For example, an embodiment relates to downhole oil/water/solids separation and to managing back pressure to manipulate the well fluid component separation. One way of controlling separation of oil and water, for example, is by regulating back pressure applied to the oil stream and/or the water stream. The back pressure can be controlled by regulating a flow restriction to cause desired throttling of the oil stream and/or water stream exiting a well fluid component separator. In addition to well fluid component separation, embodiments described herein relate to equipment designed to provide a desired throttling, i.e. back pressure, applied to the outlet streams. The

magnitude of throttling can range from completely closed (no flow) to wide open (full flow) depending on the oil/water/solids content of the well fluid.

[0021] Controlling back pressure and related flow can be highly dependent on the injection zone orientation relative to the producing zone (injection zone uphole or downhole of the producing zone). Some of the differences between these two orientations relate to injecting uphole where the device can throttle and vent to a tubing annulus in a single operation, and injecting downhole where the device may need to throttle the flow "in-line", i.e. receive the injection flow from tubing, throttle the flow, and then return the flow to another tubing routed toward the injection zone. In some applications, the diameter of a throttle passage/opening of a flow restrictor can range from about 0.125 inches to 1.0 inches.

[0022] Referring generally to Figure 1, a well system 20 is illustrated as deployed in a wellbore 22. In this embodiment, the well system 20 comprises an electric submersible pumping system 24 having a submersible motor 26 and a submersible pump 28 driven by the submersible motor 26. The electric submersible pumping system 24 may comprise a variety of other components, such as a pump vent or intake 30 and a motor protector 32. Additionally, the illustrated well system 20 further comprises a separator 34, such as a centrifugal separator or a cyclone separator designed to separate well fluid components. For example, the separator 34 may be designed to separate fluid components, e.g. oil and water, fluid and solid components, e.g. water and particulates, or other combinations of components, e.g. oil, water, and solids. The separator 34 may be connected into well system 20 at a variety of locations, such as the illustrated location above submersible pump 28. However, the separator 34 also may be positioned upstream from submersible pump 28 to limit the flow of solids through pump 28.

[0023] In the example illustrated, the well system 20 is placed downhole in a hydrocarbon well, such as inside a well casing 36. When placed at a desired location downhole, the submersible motor 26 may be powered to drive both the submersible pump 28 and the separator 34. During operation of this embodiment, well fluid is drawn into

pump 28 through vent 30 and pumped into the separator 34. The separator 34 accelerates and drives the well fluid mixture in a circular path, thereby utilizing centrifugal forces to locate the more dense materials, e.g. water and solids, to a more distant radial position and the less dense fluids, e.g. oil, to a position closer to the center of rotation. In this example, an oil stream and a water stream exit the separator 34 and travel separately along different paths to a redirector 38 which redirects the water stream and injects it into the surrounding formation while directing the oil stream uphole through, for example, a tubing 40 to a surface collection location. The separator 34 may be designed to separate oil, water and solids (see Figure 10) in which case the solids component of the well fluid is directed by redirector 38 to a desired location. It should be noted that the separator 34 may be used in a variety of locations with or without the redirector 38. For example, the separator 34 may be utilized to separate oil, water and solids components and then to recombine the solids with the oil stream for delivery to a desired surface collection location, thus avoiding plugging the water injection zone.

[0024] References to water streams, oil streams, and/or solids streams output from the separator 34 refers to streams that have a substantial concentration of water, oil, and solids, respectively. In other words, the respective streams may contain portions of the other well fluid components and may not be pure in the sense that they contain solely water, oil, or solids. Depending on the specific application, the well system 20 may comprise various other components, such as packers 42 and 44.

[0025] Figure 2 illustrates a cutaway view of one example of separator 34 which, in this case, is a centrifugal type separator. A well fluid mixture is driven through a well fluid inlet 45 of the separator 34 and into a separator portion or chamber 46, e.g. a cyclone chamber, of the separator 34. The components of the well fluid are separated by a divider 48 which defines conduits or passages for carrying the separated well fluid components from the separator portion 46. For example, the passages may comprise an oil passage or conduit 50 and a water passage or conduit 52 which serve as outlets from the separator chamber 46. The divider 48 also may separate the well fluid into additional components, such as solids, which are delivered along a separate solids passage or

conduit. As illustrated, the oil passage 50 is located further inward in a radial direction with respect to the water passage 52. Back pressure may be selectively applied to the oil, water, and/or solids streams to affect the separation process. For example, back pressure on the water stream through water passage 52 can improve the separation results when separating well fluid having a high percentage of oil. For well fluid having a higher percentage of water, a higher back pressure for the oil stream through oil passage 50 can similarly improve the oil and water separation. Generally, the same back pressure principle applies to cyclone or centrifugal type separators.

[0026] Referring generally to Figure 3, a cross-sectional view of another type of separator system 54 is illustrated as having separator 34 to separate the well fluid components into streams flowing through, for example, oil passage 50 and water passage 52. It should be noted that the separator 34 also may be designed to separate out the solids component which is then routed along a separate conduit, as discussed in greater detail below. In Figure 3, arrows 56 show a representative path of the oil stream and arrows 58 show a representative path of the water stream. A flow restrictor 60, e.g. a throttle component, is positioned in the water passage 52 in this example. However, an alternate flow restrictor 60 can be placed in the oil passage 50, or an additional flow restrictor 60 can be placed in the oil passage 50 so that flow restrictors are in both the water passage and the oil passage. In this embodiment, the water stream 58 flows uphole into the flow restrictor 60.

[0027] The flow restrictor 60 may be selected from a number of different types of flow restrictors, an example of which has an orifice member 62 with a flow through orifice or passage 64. The size of the orifice 64 may vary and the configuration of flow restrictor 60 and orifice member 62 enables adjustment of the back pressure in water stream 58. For example, the flow restrictor 60 may be a removable flow restrictor to enable interchanging with other flow restrictors 60 having a different throttling capability, e.g. a different throttle member 62 with a flow through orifice 64 having a different size, thus enabling adjustment of the back pressure. In other embodiments, the orifice member 62 is removable and may be interchanged with other orifice members 62

having orifices 64 of different sizes. The flow restrictor 60 and/or orifice member 62 may be interchanged with the aid of a tool 66 that can be lowered downhole to place and/or remove the flow restrictor 60 or orifice member 62. By way of example, the tool used to interchange the device may comprise a tool run on a wireline, slickline, coiled tubing, or another suitable conveyance 68. In some applications, slickline can be the most economical conveyance for changing the throttling. In the example illustrated in Figure 3, the oil conduit 50 may be positioned or configured to prevent tools lowered by conveyance 68 from inadvertently entering the oil passage 50. For example, the oil passage 50 can have an angled portion 70 to prevent the tool 66 from entering the conduit, or the conduit can be sized so that the tool 66 is not able to enter the passage.

[0028] In some applications, the flow restrictor 60 comprises an orifice member 62 having a variable size throttle orifice 64 so that replacement of the flow restrictor 60 is not required to vary the size of orifice 64. By way of example, the size of the orifice can be adjusted mechanically at the surface or by tool 66 lowered via conveyance 68, e.g. wireline, slick line, coiled tubing. In other applications, the orifice member 62 may have an adjustable orifice 64 which is adjustable via hydraulic pressure directed downhole through a hydraulic line or by an electric motor controlled by electric signals sent from the surface or from a downhole controller.

[0029] As further illustrated in Figure 3, check valves 72 are located in the oil passage 50 and/or the water passage 52. The check valves 72 can be utilized to prevent fluid from moving back through the oil passage 50 and the water passage 52 into the separator 34. Blocking this potential backflow with check valves 72 prevents damage to separator 34.

[0030] Referring again to Figure 1, packers 42, 44 may be used to isolate regions of the wellbore along a well system 20. By way of example, packers 42 and 44 are illustrated as isolating an area where water is to be re-injected into the formation proximate redirector 38 from an area where the well fluid is drawn from the formation below the lower packer 44. The packer configuration effectively isolates the pump intake

30 from the re-injection fluid. Alternatively, the packer 44 can be located below the submersible pump 28 as long as the water is re-injected above the packer 42 or below the packer 44, thereby adequately isolating the area where the well fluids are produced from the area of the formation where the water is injected. A variety of packer configurations may be utilized as long as they are positioned to create isolation between produced fluids and injected fluids.

[0031] Well system 20 also may be configured to enable injection of stimulation treatments downhole. In the embodiment illustrated in Figure 4, for example, the separator system 54 is similar to that illustrated in Figure 3 except the flow restrictor 60 has been removed. In the configuration of Figure 4, stimulating treatments may be pumped down tubing 40 and into both the oil passage 50 and the water passage 52. The flow restrictor 60 can be replaced with a flow device that prevents treatment fluid from following along the path of re-injected water. By way of example, arrow 74 illustrates a representative path of the stimulating treatment. The check valves 72 prevent the stimulation fluid from traveling into the separator 34 to avoid causing detrimental effects with respect to the separator.

[0032] Referring generally to Figure 5, an alternate configuration is illustrated to show re-injection of a water stream to a desired injection zone 76 located below a producing zone 78. The submersible motor 26, pump 28, and separator 34 may be connected in a manner similar to that described with reference to Figure 1, and the redirector 38 is connected uphole of the separator 34. The redirector 38 is connected to a conduit 80 that extends downhole to route the redirected fluid through a lower packer 82. The lower packer 82 separates producing zone 78 from the injection zone 76 located below packer 82. In this embodiment, the water stream travels through conduit 80 and through a tail pipe assembly 84. The tail pipe assembly 84 extends through lower packer 82 and into the injection zone 76 to enable reinjection of the water component.

[0033] Figure 6 illustrates a more detailed cross-sectional view of an embodiment of redirector 38. Similarly, Figure 7 illustrates a more detailed cross-sectional view of an

embodiment of redirector 38 combined with flow restrictor 60 positioned in a flow restrictor pocket 86. The flow restrictor pocket 86 is configured to receive the flow restrictor 60. In this particular example, the water passage 52 is located radially outside of the oil passage 50 based on the centrifugal oil/water separation. The oil passage 50 extends from the downhole redirector 38, through the redirector, and uphole past the redirector until it connects with tubing 40, e.g. production tubing/coiled tubing. The water passage 52 extends from below the redirector 38 and into the redirector 38. The water passage 52 merges into a water passage 88 which connects the water passage 52 with the flow restrictor pocket 86. In the illustrated embodiment, the water passage 88 extends in a direction substantially perpendicular to the water passage 52 so the water stream flows through a sharp turn, e.g. a 90° turn. However, the angle of the turn can vary and in some applications it may less sharp, e.g. 45° or more sharp, e.g. 135°. A re-injection passage 90 is connected between the flow restrictor pocket 86 and an appropriate passage, e.g. conduit 80, to route the water component of the well fluid to the desired injection zone 76.

[0034] With additional reference to Figure 8, an embodiment of the flow restrictor 60 is illustrated. In this embodiment, the flow restrictor 60 comprises a body 92 which defines therein an upper inner chamber 94 and a lower inner chamber 96. The upper inner chamber 94 and the lower inner chamber 96 are divided by a flow restriction, such as flow restriction orifice member 62 having the flow passage/orifice 64 by which fluid flow is throttled. The orifice member 62 and the flow restrictor body 92 can be the same part or two different parts which are fit together. The entire flow restrictor 60 and/or flow restrictor orifice member 62 may be fixed or removable depending on the well fluid separation application.

[0035] In the embodiment illustrated, the flow restriction orifice 64 of orifice member 62 has a narrower diameter than the diameter of upper inner chamber 94 or lower inner chamber 96, however the diameter of the orifice 64 could be essentially the same as the diameter of either the upper chamber 94 or the lower chamber 96. Additionally, one or more passages 98 are located in the flow restrictor body 92 and

hydraulically connect the upper chamber 94 with a region external to the flow restrictor 60. Another passage 100 is located on a downhole end of the flow restrictor 60 and provides a flow path which enables communication with the bottom of orifice member 62 through lower inner chamber 96.

[0036] When the flow restrictor 60 is positioned within flow restrictor pocket 86, the passages 98 allow fluid to pass from the water passage 88, through the passages 98, and into the upper inner chamber 94. The fluid then flows through the restrictor orifice 64 of orifice member 62, and into the lower inner chamber 96. From the lower inner chamber 96, the fluid, e.g. water, flows through passage 100 and out of flow restrictor 60 for re-injection into a desired zone, e.g. injection zone 76. A plurality of seals 102, e.g. O-ring seals, may be mounted about body 92 to form a seal with the interior surface of flow restrictor pocket 96. In a variety of applications, the flow restrictor 60 may be removable. Additionally or alternatively, the orifice member 62 can be constructed as interchangeable or adjustable to enable adjustment with respect to the size of flow passage 64. It should be noted that the flow restrictor 60 can have many internal configurations that enable the desired restriction/throttling of fluid flow to facilitate separation of well fluid components.

[0037] When removable, the flow restrictor 60 may comprise an attachment member 104 designed to facilitate engagement with tool 66 for placement and retrieval with respect to the flow restrictor pocket 86. As noted earlier, the tool 66 can be connected to a variety of conveyances 68, e.g. wireline, slick line, or coiled tubing.

[0038] In many applications, the separation techniques applied and the flow restrictor selected depend on parameters/characteristics related to the well fluid, e.g. well fluid content. For example, the content of the well fluid can be useful in determining the appropriate techniques for separating, producing, and re-injecting the various well fluid components. In some applications, a sensor 106 can be located downhole to determine selected parameters of the well fluid, such as the oil/water/solids ratio in the well fluid, as illustrated in Figure 9. Data from sensor 106 may be transmitted uphole in many ways,

e.g. electric signals over a wire, fiber optic signals, radio signals, acoustic signals, wireless transmission techniques, and other suitable data transfer techniques. Alternatively, the signals may be transmitted to a downhole processor 108. The downhole processor 108 can be used to provide instructions to, for example, a motor coupled to an adjustable orifice member 62 to set a certain orifice size or to perform other downhole functions. Depending on the application, the sensor 106 can be located downstream from the well fluid intake of the separator 34, inside the separator 34, inside the redirector 38, inside the flow restrictor 60, outside of the separator 34 and downhole from the well fluid intake 30, outside of the separator 34 and uphole from the well fluid intake 30, outside the separator 34 and at the same level as the well fluid intake 30, downstream from the well fluid inlet 30, upstream from the separator, or at other suitable locations.

[0039] Referring again to Figure 9 an example of the flow restrictor 60 is illustrated as having sensor 106 located in the upper inner chamber 94. In an alternate embodiment, the sensor 106 may be located in the lower inner chamber 96; or multiple sensors 106 may be located in the upper inner chamber, the lower inner chamber, and/or other desired locations. Depending on the desired acquisition of information regarding the well fluid, the sensor 106 may be designed to sense a variety of parameters, such as temperature, flow rate, pressure, viscosity, oil/water ratio, or other desired parameters. Additionally, the sensor or sensors 106 may be used in cooperation with a telemetry pickup 110 which is integrated into the redirector 38 or into another suitable component of the well system 20. The sensor 106 is able to communicate with downhole processor 108 or with another suitable data gathering system via an appropriate telemetry system, e.g. an electrical contact or "short-hop" telemetry system. As discussed above, the information obtained from sensor 106 also may be used to adjust the size of orifice 64. For example, orifice member 62 may comprise an adjustment mechanism 111 which is mechanically, hydraulically, electrically, or otherwise adjustable. In one example, a tool may be lowered on a suitable conveyance 68 to mechanically actuate adjustment mechanism 111, thus changing the size of orifice 64.

[0040] Referring generally to Figure 10, another embodiment of separator 34 and separator system 54 is illustrated. In this embodiment, the separator 34 is designed to separate the well fluid into additional components. For example, the separator 34 may be designed to separate well fluid into oil, water, and solids, e.g. particulates, to provide beneficial separation and production results. A factor in the long term, successful application of downhole fluid separation technology is maintaining injectivity into the injection zone, e.g. zone 76. During a production operation, reductions in injectivity can be caused by solids, e.g. particulates, which are carried to the injection zone, e.g. zone 76, following oil and water separation. The accumulation of solids on the sand face of the injection zone can reduce the injectivity. Maintaining the injectivity index as close as possible to the initial injectivity index for as long as practical can be beneficial to continued operation of the downhole fluid separation systems. Production can be improved by limiting the amount of solids deposited at the injection zone alone or in combination with injection zone stimulation intervention.

[0041] The embodiment of separator 34 illustrated in Figure 10 is designed to provide an additional stream of discharge for the solids. The stream can be used to direct the solids away from the water injection zone 76. In some applications, the stream of discharge for the solids can be recombined with the produced oil component of the well fluid so as to leave the injected stream of water relatively free of solids.

[0042] As discussed above with respect to separator 34, separation of the oil component, water component, and solids component can be achieved by rotating, dynamic separators, e.g. cyclone or centrifugal separators, operating according to the principle of density separation using the forces created from rotation. When the well fluid is rotated, the heavier phase/component is separated to the outer radius of rotation. For example, the heavier solids may be separated to a radially outer region, while the lighter water is separated to an intermediate region, and the lighter oil is separated to a region closer to the core of rotation. This radially centric oil component (possibly with some remaining water and/or solids) is discharged as the production stream.

[0043] Referring again to the embodiment illustrated in Figure 10, the separator 34 comprises a solids passage 112 through which a solids stream having a high concentration of solids is discharged. As illustrated, the solids passage/discharge 112 is located at a position which is a radial outlying position relative to the water passage 52 and the oil passage 50. Passages 50, 52 and 112 serve as outlets from separator region 46 as the streams enter divider 48. In this example, the solids are the heaviest components and the cyclone/centrifugal separation separates the solids (with some water as a carrying fluid) to the outermost radius of the separator portion 46. As described above, the oil is lightest and is separated to the core of the rotation to create an oil stream. A majority of the water is separated to an intermediate location between the oil component and the solids component and is relatively free of solids. This water stream, which is relatively free of solids, may be discharged to the desired injection zone, e.g. injection zone 76, via techniques described above. Re-injecting the water stream at injection zone 76 avoids the potential for clogging the injection zone 76 and thus avoids damage to the injection zone. The outermost component of the well fluid is the solids component which contains the highest proportion of solids, and this solids component can be routed to a recombination region 114 and recombined with the oil stream as production flow in, for example, tubing 40.

[0044] In operation, a well fluid mixture is driven into the separator chamber 46, e.g. a cyclone/centrifugal chamber, of the separator 34 by submersible pump 28 or another suitable pump of pumping system 24. The well fluid flows into separator portion 46 of separator 34 through a well fluid inlet 116. Within separator portion 46, the components of the well fluid are separated into the oil, water, and solids components which primarily comprise oil, water, and solids, respectively. Streams of primarily oil, water, and solids are then split into component streams by divider 48, and the respective component streams are routed through the corresponding oil passage 50, water passage 52 and solids passage 112. The well fluid components may be directed through a corresponding oil stream outlet 118, water stream outlet 120 and solids outlet 122 of divider 48 to appropriate flow paths downstream. The water passage 52 is radially outward relative to oil passage 50, and the solids passage 112 is radially outward relative

to water passage 52. By way of example, the oil passage 50, water passage 52, and solids passage 112 may be in the form of concentric conduits which route the respective well fluid components to desired locations downstream. For example, the component streams may be routed to an appropriate redirector 38 and/or through appropriate flow restrictors 60.

[0045] As described with respect to the various well system embodiments above, the separation of well fluid components, e.g. the separation of oil, water, and solids components, can be improved by manipulating the back pressure on the various well fluid component streams. In many applications, the desired back pressure can be accomplished by providing removable flow restrictors, removable orifice members, and/or adjustable orifices placed in the oil/solid stream and/or the water stream. However, the back pressure can be created with a variety of devices and with respect to various combinations of the well fluid component streams to achieve desired production results. The flow restrictor, for example, can be placed in the oil/solid stream, the oil component stream, the water component stream, and/or the solids component stream.

[0046] Although only a few embodiments of the present invention have been described in detail above, those of ordinary skill in the art will readily appreciate that many modifications are possible without materially departing from the teachings of this invention. Accordingly, such modifications are intended to be included within the scope of this invention as defined in the claims.

CLAIMS

What is claimed is:

1. A downhole device, comprising:

a separator system, having:

a separator comprising a well fluid inlet, an oil stream passage, a water stream passage, and a solids passage; and

a removable flow restrictor located in at least one of the water stream passage, the oil stream passage, or the solids passage to facilitate separation of well fluid components.

2. The downhole device of claim 1, wherein the removable flow restrictor has a fixed throttle orifice member having a flow passage, the size of the flow passage being changed by interchanging flow restrictors.

3. The downhole device of claim 1, wherein the removable flow restrictor has a removable throttle orifice member having a flow passage, the size of the flow passage being changed by interchanging removable throttle orifice members.

4. The downhole device of claim 1, further comprising a pumping system having a submersible pump, wherein the water stream passage opens up into a wellbore at a point farther downhole than the submersible pump.

5. The downhole device of claim 1, wherein the removable flow restrictor is removable by a downhole tool relayed downhole by a conveyance.

6. The downhole device of claim 1, wherein the separator is a cyclone separator.

7. The downhole device of claim 1, wherein the separator is a centrifugal separator.

8. The downhole device of claim 1, wherein the separator system further comprises a sensor that senses a parameter of flowing fluid.

9. The downhole device of claim 8, wherein the sensor is located downstream from the well fluid inlet.

10. The downhole device of claim 8, wherein the sensor is located inside the separator.

11. The downhole device of claim 8, wherein the sensor is located upstream from the separator.

12. The downhole device of claim 1, wherein the removable flow restrictor has a throttle member with a selectively variable orifice.

13. A method of separating fluids and solids downhole, comprising:

placing a separation system downhole, the separation system comprising a separator having a well fluid inlet, an oil stream outlet passage, a water stream outlet passage, and a solids outlet passage, the separator system further comprising a flow restrictor pocket located in the oil stream outlet passage or the water stream outlet passage;

determining a parameter of a downhole well fluid;

selecting a degree of flow restriction based on the determination and selecting a corresponding flow restrictor; and

placing the selected flow restrictor in the flow restrictor pocket.

14. The method of claim 13, further comprising varying the flow restriction by removing the flow restrictor from the separator while the separator is downhole and then placing a different flow restrictor having a different throttle into the separator while the separator remains downhole.

15. The method of claim 13, wherein determining comprises determining with a sensor located downhole within the separator system.

16. The method of claim 15, further comprising locating the sensor inside the flow restrictor.

17. A method of preparing a downhole fluids and solids separation system, comprising:

constructing a separator with a separation portion in communication with a fluid inlet, the separation portion also being in communication with a divider having an oil stream passage, a water stream passage positioned radially outward from the oil stream passage, and a solids passage positioned radially outward from the water stream passage; and

positioning a flow restrictor in cooperation with the separator to enable selective manipulation of the separation of water and oil.

18. The method of claim 17, further comprising deploying the separator downhole into a wellbore; and separating oil, water, and solids for discharge through the oil stream passage, the water stream passage, and the solids passage, respectively.

19. The method of claim 18, further comprising using a downhole pumping system to pump the separated oil to a surface location.

20. The method of claim 19, further comprising reinjecting the separated solids back into the separated oil above the downhole pumping system; and delivering the separated solids to a surface location.

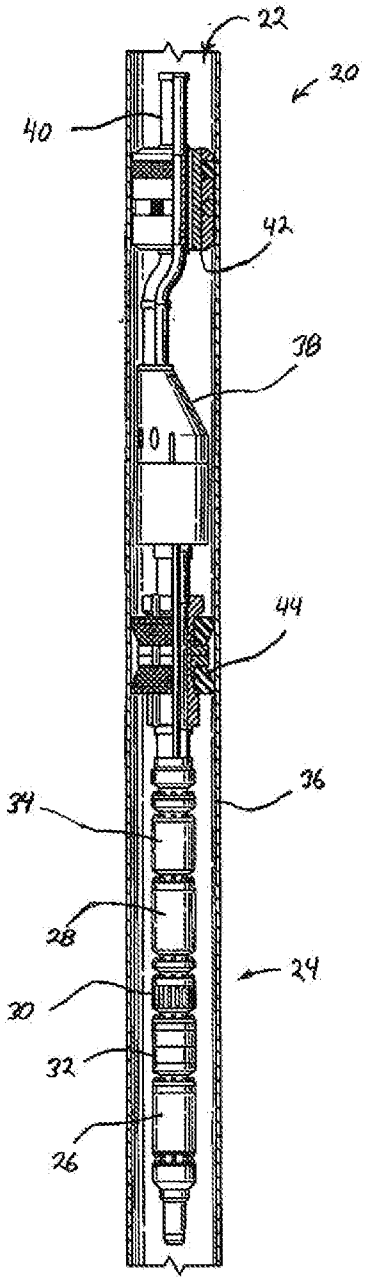

FIGURE 1

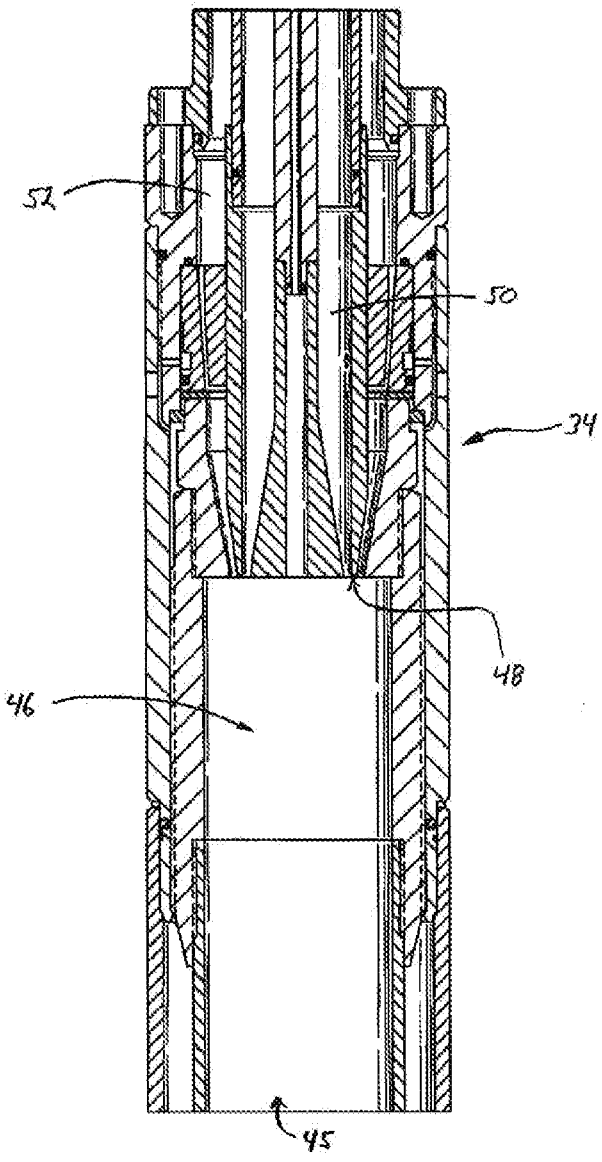

FIGURE 2

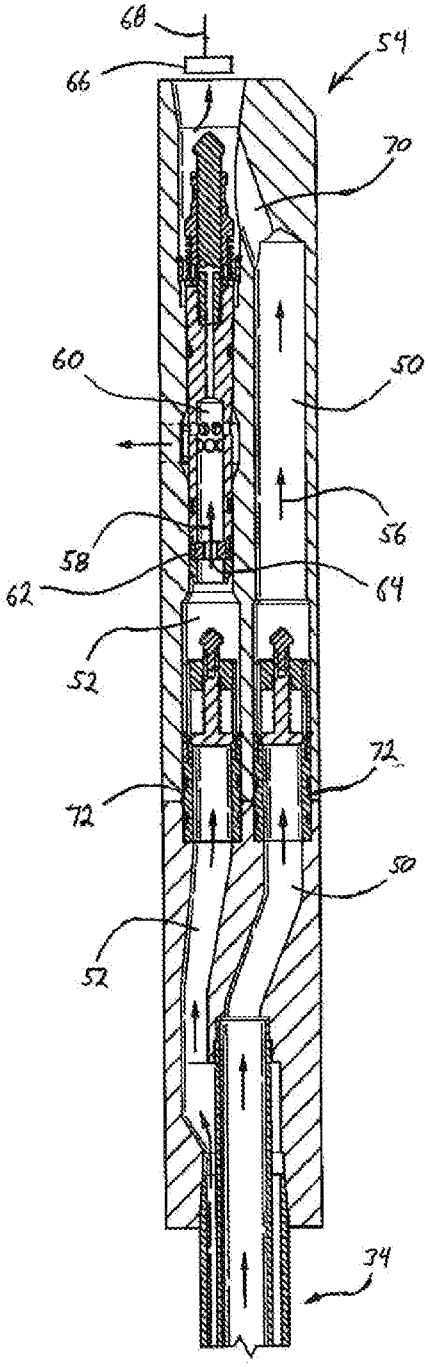

FIGURE 3

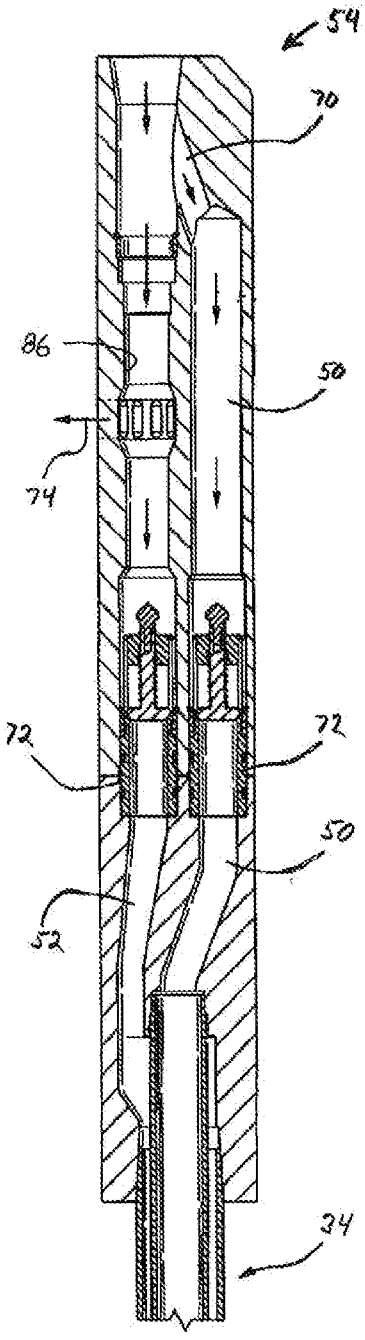

FIGURE 4

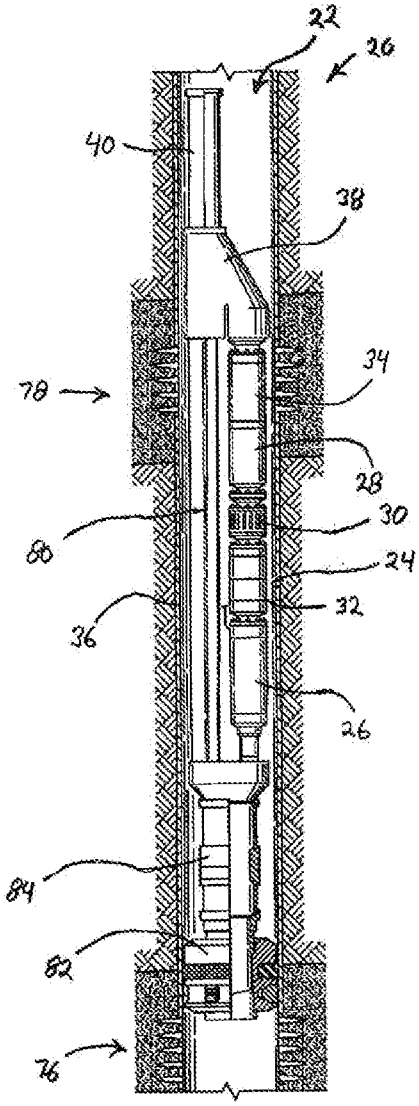

FIGURE 5

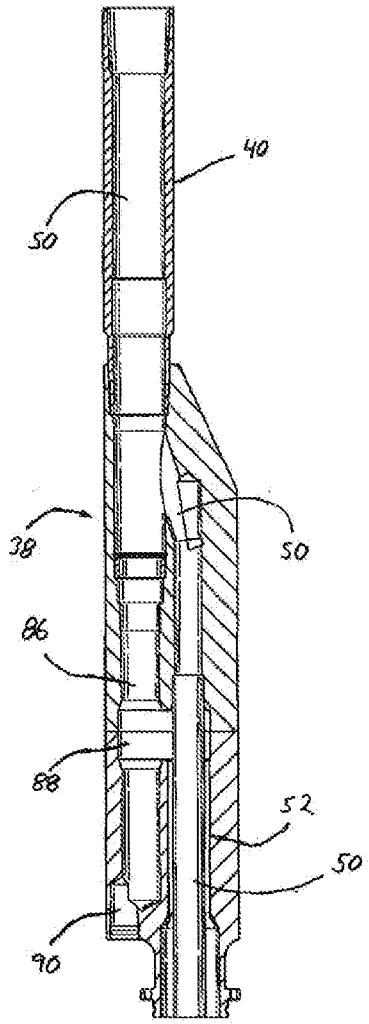

FIGURE 6

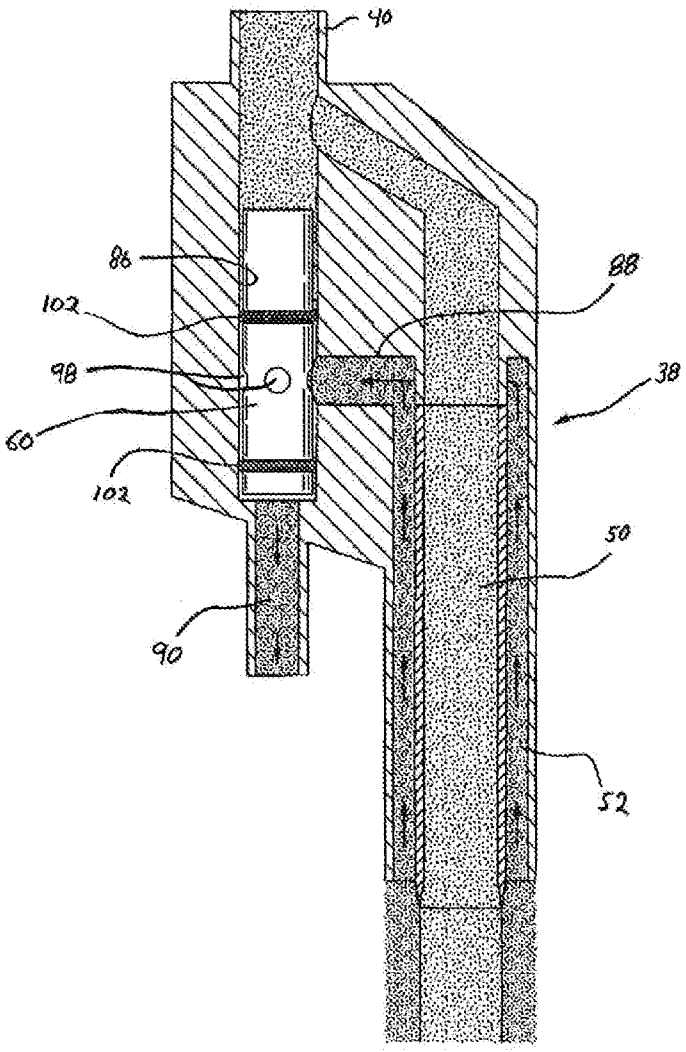

FIGURE 7

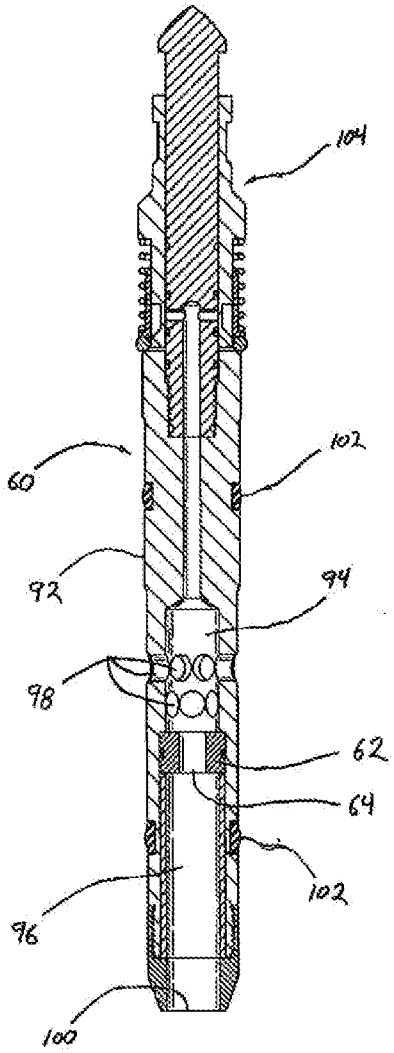

FIGURE 8

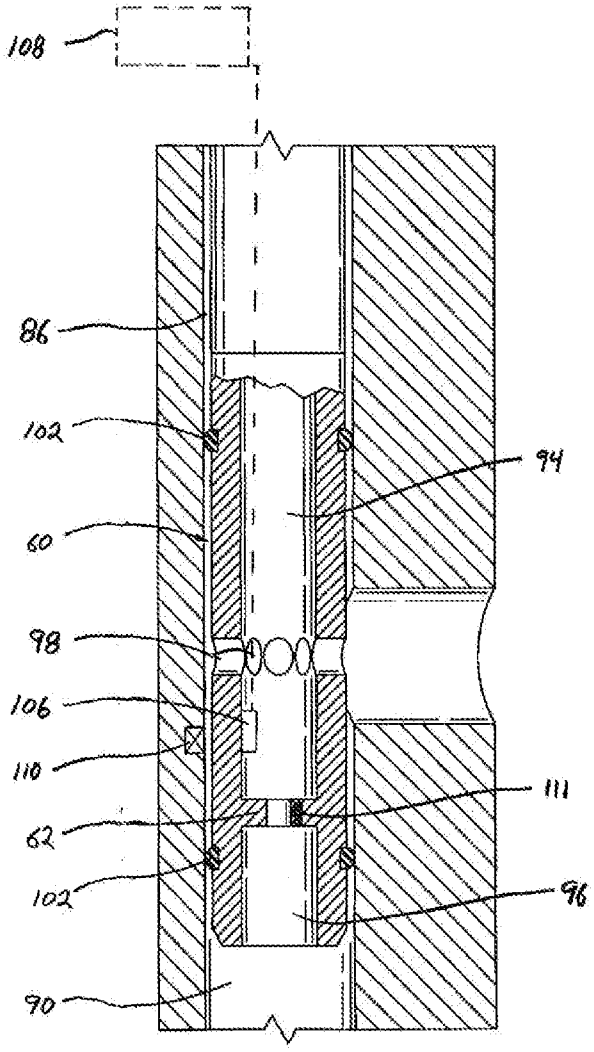

FIGURE 9

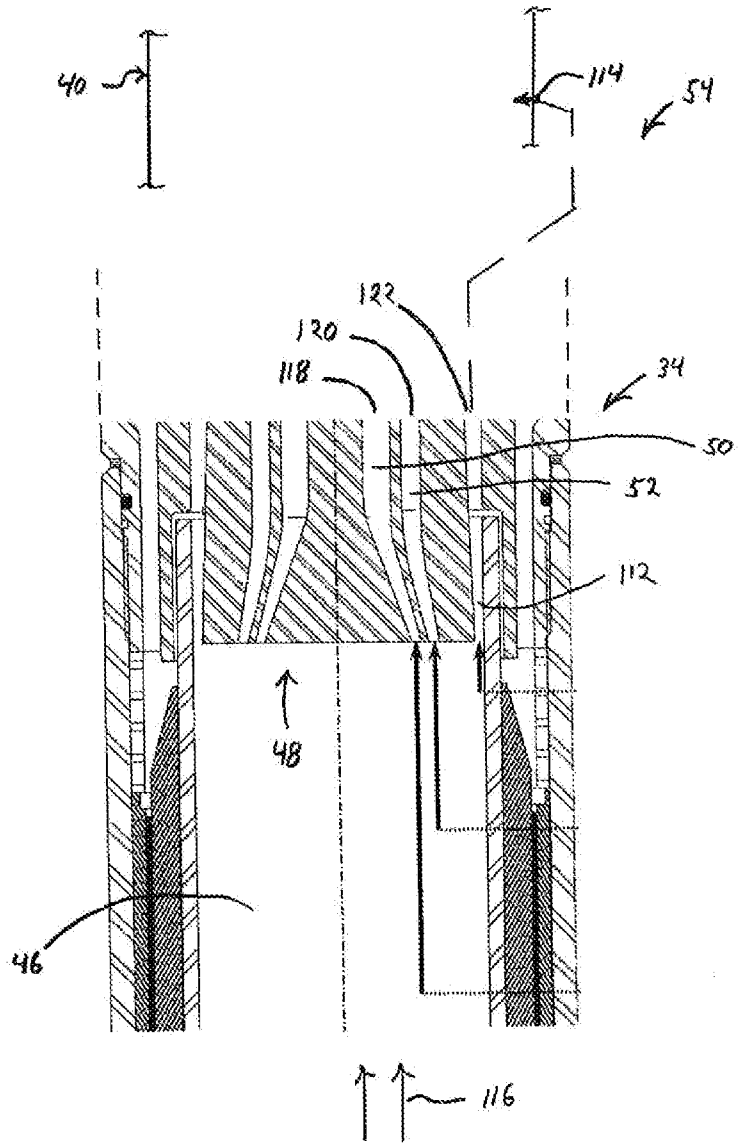

FIGURE 10

INTERNATIONAL SEARCH REPORT

International application No.
PCT/US2011/040325

A. CLASSIFICATION OF SUBJECT MATTER

E21B 43/38(2006.01)i

According to International Patent Classification (IPC) or to both national classification and IPC

B. FIELDS SEARCHED

Minimum documentation searched (classification system followed by classification symbols)

E21B 43/38; E21B 43/34; E21B 43/40; B01D 17/035

Documentation searched other than minimum documentation to the extent that such documents are included in the fields searched

Korean utility models and applications for utility models

Japanese utility models and applications for utility models

Electronic data base consulted during the international search (name of data base and, where practicable, search terms used)

eKOMPASS(KIPO internal) & Keywords: separator, oil stream passage, water stream passage, solid passage, removable flow restrictor

C. DOCUMENTS CONSIDERED TO BE RELEVANT

Category*	Citation of document, with indication, where appropriate, of the relevant passages	Relevant to claim No.
A	US 2009-0056939 A1 (HACKW0RTH MATTHEW R. et al.) 05 March 2009 See abstract, paragraph 0023, claims 1, 8, 19 and figure 3	1-20
A	US 05996690 A (SHAW; CHRISTOPHER K. et al.) 07 December 1999 See abstract, column 5 and figures 2,3	1-20
A	US 6378608 B1 (NILSEN; FINN PATRICK et al.) 30 April 2002 See abstract, column 3 and figure 1	1-20
A	WO 97-11254 A1 (BAKER HUGHES LIMITED) 27 March 1997 See abstract, pages 3,4 and figure 1	1-20

☐ Further documents are listed in the continuation of Box C. ☒ See patent family annex.

* Special categories of cited documents:

"A" document defining the general state of the art which is not considered to be of particular relevance

"E" earlier application or patent but published on or after the international filing date

"L" document which may throw doubts on priority claim(s) or which is cited to establish the publication date of citation or other special reason (as specified)

"O" document referring to an oral disclosure, use, exhibition or other means

"P" document published prior to the international filing date but later than the priority date claimed

"T" later document published after the international filing date or priority date and not in conflict with the application but cited to understand the principle or theory underlying the invention

"X" document of particular relevance; the claimed invention cannot be considered novel or cannot be considered to involve an inventive step when the document is taken alone

"Y" document of particular relevance; the claimed invention cannot be considered to involve an inventive step when the document is combined with one or more other such documents, such combination being obvious to a person skilled in the art

"&" document member of the same patent family

Date of the actual completion of the international search	Date of mailing of the international search report
23 NOVEMBER 2011 (23.11.2011)	**24 NOVEMBER 2011 (24.11.2011)**

Name and mailing address of the ISA/KR

Korean Intellectual Property Office
Government Complex-Daejeon, 189 Cheongsa-ro,
Seo-gu, Daejeon 302-701, Republic of Korea

Facsimile No. 82-42-472-7140

Authorized officer

BAHNG, Seung Hoon

Telephone No. 82-42-481-8444

INTERNATIONAL SEARCH REPORT

Information on patent family members

International application No.

PCT/US201 1/040325

Patent document cited in search report	Publication date	Patent family member(s)	Publication date
US 2009-0056939 A1	05.03.2009	CA 2638532 A1	28.02.2009
		GB 08 14232 DO	10.09.2008
		GB 2452372 A	04. 03.2009
		GB 2452372 B	07.07.2010
		GB 2462738 A	24. 02.2010
		US 2009-0242 197 A1	01.10.2009
		US 2011-0000675 A1	06.01.2011
		US 78 14976 B2	19.10.2010
		US 8006757 B2	30.08.2011
US 05996690 A	07.12.1999	AU 1997-26830 B2	16.12.1999
		AU 1997-26830 C	19.11.1997
		CA 22 16430 C	12.12.2006
		CA 2253574 C	18.07.2006
		CA 2480703 A1	03.10.1996
		CA 2480707 A1	03.10.1996
		CA 2499225 A1	06.11.1997
		CA 2499228 C	21.07.2009
		EP 08 15349 A1	07.01.1998
		EP 08 15349 A2	10.05.2000
		EP 0897456 A2	05.07.2000
		GB 2327695 A	03.02.1999
		GB 23292 10 A	17.03.1999
		GB 2332463 A	23.06.1999
		GB 2332464 A	23.06.1999
		GB 2332465 A	23.06.1999
		GB 2347 157 A	30.08.2000
		GB 2347 158 A	30.08.2000
		GB 2347 159 A	30.08.2000
		US 05762 149 A	09.06.1998
		US 05868210 A	09.02.1999
		WO 96-30625 A1	03.10.1996
		WO 97-41 330 A2	06.11.1997
US 6378608 B1	30.04.2002	AU 1999-25333 A1	30.08.1999
		CA 2320 164 A1	19.08.1999
		CA 2320 164 C	06.05.2008
		GB 2335376 A	22.09.1999
		GB 2335376 B	06.03.2002
		GB 9803 183 DO	08.04.1998
		N020004057A	11.08.2000
		N020004057D0	11.08.2000
		N0318754B 1	02.05.2005
		WO 99-40992 A1	19.08.1999
W0 97- 11254 A1	27.03.1997	AU 6939896 A	09.04.1997
		AU 697376 B2	01.10.1998
		CA 223 1543 A1	27.03.1997
		DE 69608459 D1	21.06.2000

INTERNATIONAL SEARCH REPORT

Information on patent family members

International application No.

PCT/US201 1/040325

Patent document cited in search report	Publication date	Patent family member(s)	Publication date
		EP 0851968 A1	08.07, 1998
		EP 0851968 A2	08.09, 1999
		EP 0851968 B1	17.05, 2000
		GB 9519339 DO	22. 11, 1995
		N0312215B1	08.04, 2002
		N0981287A	20.03, 1998
		N0981287D0	20.03, 1998
		US 6213208 B1	10.04, 2001